ADDENDUM TO:
SUPPLEMENT TO STANDARD
OPERATION AND MAINTENANCE MANUAL
SACRAMENTO RIVER FLOOD CONTROL PROJECT

&

VEGETATION MONITORING PLAN OF FEATHER RIVER FLOODPLAIN ADJACENT TO UNIT No. 144 LEVEE SYSTEM

UNIT No. 144
WEST LEVEE OF FEATHER RIVER
FROM NORTH BOUNDARY OF LEVEE DISTRICT No. 1
TO NORTH BOUNDARY OF RECLAMATION DISTRICT No. 823
(MAINTENANCE AREA 3)

Prepared for: ***Levee District One of Sutter County (LD1),***
Central Valley Flood Protection Board (CVFPB),
& U. S. Army Corps of Engineers (USACE)

Prepared by: ***Wood Rodgers and GEI Consultants***

January 12, 2011 DRAFT

TABLE 1

Lower Feather River Corridor (River Miles 13.0-30.0)
2010 Baseline Hydraulic Profile Conditions along West Bank Levee, Unit No 144
(All Elevations in 1929 NGVD; TOL = Top of Levee)

Lower Feather River Floodplain Mapping Study River Mile	Unsteady Flow								Steady Flow				LD #1 Right Bank Levee Unit No. 144, 2010 Baseline TOL Profile	USACE 1957 Design Profile	2010 Baseline Freeboard Above USACE 1957 Design Profile (Current TOL - 1957 Profile)
	1-in-100 AEP (Peak flow = 280,000 cfs)				1-in-200 AEP (Peak flow = 350,000 cfs)				1957 Design Flow (300,000 cfs)						
	With no Setback Levees	With Only TRLIA Setback Levee Btwn. RMs 16.5 - 24.0	2010 Baseline with Setback Levees on Units 144 and 145 Btwn. RMs 16.5 - 24.0	2010 Baseline Freeboard to TOL	With no Setback Levees	With Only TRLIA Setback Levee Btwn. RMs 16.5 - 24.0	2010 Baseline with Setback Levees on Units 144 and 145 Btwn. RMs 16.5 - 24.0	2010 Baseline Freeboard to TOL	With no Setback Levees	With Only TRLIA Setback Levee Btwn. RMs 16.5 - 24.0	2010 Baseline with Setback Levees on Units 144 and 145 Btwn. RMs 16.5 - 24.0	2010 Baseline Freeboard to TOL			
30.00	75.33	74.46	74.43	10.59	78.39	77.26	77.29	7.73	77.96	77.03	77.00	8.02	85.02	78.74	6.28
29.83	75.26	74.39	74.36	10.69	78.34	77.20	77.23	7.82	77.91	76.97	76.94	8.11	85.05	78.62	6.43
29.83	75.26	74.39	74.36	10.72	78.34	77.20	77.23	7.85	77.91	76.97	76.94	8.14	85.08	78.62	6.46
29.82	75.26	74.38	74.36	10.78	78.34	77.20	77.23	7.91	77.90	76.97	76.94	8.20	85.14	78.61	6.53
29.82	75.26	74.38	74.36	10.81	78.34	77.20	77.23	7.94	77.90	76.96	76.94	8.23	85.17	78.61	6.56
29.75	75.20	74.32	74.29	9.04	78.29	77.14	77.17	6.16	77.83	76.88	76.86	6.47	83.33	78.56	4.77
29.50	75.14	74.24	74.22	9.00	78.24	77.09	77.12	6.10	77.79	76.83	76.81	6.41	83.22	78.36	4.86
29.25	75.14	74.24	74.22	9.11	78.24	77.09	77.12	6.21	77.71	76.75	76.73	6.60	83.33	78.16	5.17
29.00	74.96	74.04	74.02	8.70	78.11	76.93	76.97	5.75	77.50	76.51	76.48	6.24	82.72	77.96	4.76
28.75	74.68	73.70	73.67	8.00	77.87	76.66	76.70	4.97	77.16	76.13	76.10	5.57	81.67	77.76	3.91
28.50	74.49	73.48	73.45	7.87	77.71	76.48	76.51	4.81	76.96	75.91	75.88	5.44	81.32	77.56	3.76
28.32	74.35	73.32	73.28	16.76	77.60	76.35	76.38	13.66	76.80	75.73	75.69	14.35	90.04	77.42	12.62
28.32	74.35	73.31	73.28	17.45	77.60	76.34	76.38	14.35	76.79	75.72	75.69	15.04	90.73	77.42	13.31
28.32	74.34	73.30	73.27		77.59	76.33	76.37							77.42	
28.31	74.31	73.26	73.23		77.56	76.30	76.34		76.74	75.66	75.63			77.41	
28.31	74.32	73.27	73.24	17.40	77.57	76.31	76.35	14.29	76.73	75.65	75.62	15.02	90.64	77.41	13.23
28.31	74.31	73.27	73.24	16.48	77.57	76.31	76.34	13.38					89.72	77.41	12.31
28.25	74.26	73.21	73.18	8.28	77.53	76.26	76.30	5.16	76.67	75.58	75.55	5.91	81.46	77.36	4.10
28.00	74.03	72.94	72.90	11.02	77.32	76.02	76.06	7.86					83.92	76.80	7.12
27.97	73.92	72.82	72.79	12.95	77.23	75.91	75.95	9.79	76.39	75.27	75.24	10.50	85.74	76.56	9.18
27.97	73.91	72.81	72.77		77.21	75.89	75.93		76.20	75.05	75.02			76.56	
27.96	73.89	72.79	72.75	13.00	77.19	75.88	75.91	9.84					85.75	76.48	9.27
27.96	73.91	72.80	72.77		77.21	75.89	75.93		76.16	75.01	74.98			76.48	
27.96	73.88	72.77	72.73	11.35	77.18	75.86	75.90	8.18	76.10	74.95	74.92	9.16	84.08	76.48	7.60
27.95	73.86	72.74	72.71	11.11	77.16	75.84	75.87	7.95					83.82	76.40	7.42
27.75	73.65	72.51	72.48	8.55	76.98	75.62	75.66	5.37	76.05	74.90	74.86	6.17	81.03	76.21	4.82
27.50	73.19	72.04	72.00	8.21	76.56	75.13	75.17	5.04	75.82	74.63	74.59	5.62	80.21	75.98	4.23
27.25	72.66	71.42	71.38	7.27	76.01	74.47	74.51	4.14	75.13	73.85	73.81	4.84	78.65	75.74	2.91
27.00	72.66	71.42	71.38	6.93	76.01	74.47	74.51	3.80	74.20	72.77	72.72	5.59	78.31	75.51	2.80
26.75	72.30	70.98	70.94	8.45	75.65	74.01	74.06	5.33	73.95	72.45	72.41	6.98	79.39	75.27	4.12
26.50	71.84	70.39	70.34	9.22	75.21	73.43	73.48	6.08	73.59	72.01	71.96	7.60	79.56	75.04	4.52
26.25	71.49	69.93	69.88	10.11	74.89	72.99	73.04	6.95	73.12	71.38	71.33	8.66	79.99	74.80	5.19
26.00	71.21	69.55	69.50	10.24	74.62	72.62	72.68	7.06	72.81	70.96	70.91	8.83	79.74	74.70	5.04
25.75	70.96	69.22	69.16	10.56	74.39	72.30	72.36	7.36	72.58	70.65	70.59	9.13	79.72	74.60	5.12
25.50	70.74	68.93	68.87	10.54	74.18	72.01	72.07	7.34	72.37	70.35	70.29	9.12	79.41	74.50	4.91
25.25	70.51	68.62	68.56	10.74	73.95	71.69	71.76	7.54	72.16	70.08	70.01	9.29	79.30	74.40	4.90
25.00	70.05	67.99	67.92	11.88	73.51	71.06	71.13	8.67	71.94	69.78	69.71	10.09	79.80	74.06	5.74
24.75	69.63	67.42	67.35	10.64	73.10	70.47	70.54	7.45	71.51	69.16	69.08	8.91	77.99	73.71	4.28
24.50	69.38	67.10	67.03	10.86	72.86	70.11	70.19	7.70	71.11	68.60	68.52	9.37	77.89	73.37	4.52
24.25	69.11	66.75	66.67	11.20	72.59	69.71	69.80	8.07	70.87	68.26	68.17	9.70	77.87	73.03	4.85
24.00	68.88	66.49	66.41	10.61	72.38	69.46	69.55	7.47	70.59	67.87	67.78	9.24	77.02	72.68	4.34
23.75	68.59	66.09	66.00	11.21	72.09	69.06	69.16	8.05	70.36	67.60	67.51	9.70	77.21	72.34	4.87
23.50	68.40	65.82	65.73	12.00	71.90	68.80	68.90	8.83	70.07	67.19	67.09	10.64	77.73	71.97	5.76

Shaded Cells Represent Star Bend Setback Levee Segment Between RM 16.50 and 18.25

J:\Levee District No. 1\100372\O&M Manual & Veg Plan\Star Bend O&M Table 1 and Figure 7

TABLE 1

Lower Feather River Corridor (River Miles 13.0-30.0)
2010 Baseline Hydraulic Profile Conditions along West Bank Levee, Unit No 144
(All Elevations in 1929 NGVD; TOL = Top of Levee)

Lower Feather River Floodplain Mapping Study River Mile	Unsteady Flow								Steady Flow				LD #1 Right Bank Levee Unit No. 144, 2010 Baseline TOL Profile	USACE 1957 Design Profile	2010 Baseline Freeboard Above USACE 1957 Design Profile (Current TOL - 1957 Profile)
	1-in-100 AEP (Peak flow = 280,000 cfs)				1-in-200 AEP (Peak flow = 350,000 cfs)				1957 Design Flow (300,000 cfs)						
	With no Setback Levees	With Only TRLIA Setback Levee Btwn. RMs 16.5 - 24.0	2010 Baseline with Setback Levees on Units 144 and 145 Btwn. RMs 16.5 - 24.0	2010 Baseline Freeboard to TOL	With no Setback Levees	With Only TRLIA Setback Levee Btwn. RMs 16.5 - 24.0	2010 Baseline with Setback Levees on Units 144 and 145 Btwn. RMs 16.5 - 24.0	2010 Baseline Freeboard to TOL	With no Setback Levees	With Only TRLIA Setback Levee Btwn. RMs 16.5 - 24.0	2010 Baseline with Setback Levees on Units 144 and 145 Btwn. RMs 16.5 - 24.0	2010 Baseline Freeboard to TOL			
23.25	68.03	65.43	65.33	11.92	71.53	68.42	68.52	8.73	69.90	66.95	66.85	10.40	77.25	71.59	5.66
23.00	67.58	65.03	64.92	11.53	71.06	68.03	68.12	8.33	69.53	66.56	66.45	10.00	76.45	71.21	5.24
22.75	67.17	64.71	64.60	11.40	70.60	67.75	67.79	8.21	69.02	66.13	66.01	9.99	76.00	70.82	5.18
22.50	66.68	64.25	64.13	10.97	70.07	67.36	67.32	7.78	68.59	65.84	65.72	9.38	75.10	70.44	4.66
22.25	66.24	63.86	63.73	11.22	69.61	67.00	66.92	8.03	68.09	65.32	65.19	9.76	74.95	70.06	4.89
22.00	65.96	63.58	63.45	11.35	69.32	66.74	66.63	8.17	67.65	64.94	64.80	10.00	74.80	69.68	5.12
21.75	65.40	63.19	63.04	11.26	68.74	66.42	66.25	8.05	67.40	64.71	64.56	9.74	74.30	69.14	5.16
21.50	64.97	62.86	62.71	11.74	68.29	66.11	65.91	8.54	66.76	64.25	64.09	10.36	74.45	68.57	5.88
21.25	64.37	62.46	62.30	11.25	67.68	65.72	65.53	8.02	66.37	63.97	63.80	9.75	73.55	68.00	5.55
21.00	63.88	62.17	62.00	10.35	67.15	65.43	65.22	7.13	65.74	63.57	63.39	8.96	72.35	67.54	4.81
20.75	63.54	61.94	61.77	10.03	66.78	65.20	64.99	6.81	65.25	63.29	63.10	8.70	71.80	67.08	4.72
20.50	63.15	61.76	61.58	8.87	66.34	65.00	64.78	5.67	64.91	63.09	62.89	7.56	70.45	66.62	3.83
20.25	62.63	61.56	61.38	8.62	65.79	64.79	64.57	5.43	64.52	62.91	62.71	7.29	70.00	66.15	3.85
20.00	62.31	61.39	61.20	8.15	65.44	64.61	64.38	4.97	63.97	62.72	62.52	6.83	69.35	65.69	3.66
19.75	62.04	61.21	61.02	8.48	65.18	64.43	64.20	5.30	63.66	62.56	62.35	7.15	69.50	65.43	4.07
19.50	61.93	61.07	60.88	8.22	65.08	64.29	64.06	5.04	63.39	62.39	62.17	6.93	69.10	65.21	3.89
19.25	61.84	60.96	60.76	8.14	64.99	64.17	63.94	4.96	63.27	62.26	62.04	6.86	68.90	65.00	3.90
19.00	61.67	60.86	60.66	7.99	64.81	64.08	63.83	4.82	63.20	62.15	61.93	6.72	68.65	64.79	3.86
18.75	61.45	60.70	60.50	7.95	64.58	63.91	63.66	4.79	63.03	62.07	61.84	6.61	68.45	64.57	3.88
18.50	61.29	60.61	60.40	7.90	64.41	63.81	63.56	4.74	62.81	61.89	61.66	6.64	68.30	64.35	3.95
18.25	61.06	60.50	60.29	7.86	64.17	63.70	63.44	4.71	62.62	61.79	61.55	6.60	68.15	64.08	4.07
18.00	60.38	60.23	60.08	7.92	63.42	63.40	63.22	4.78	62.28	61.64	61.40	6.60	68.00	63.82	4.18
17.75	60.10	60.04	59.92	7.93	63.13	63.21	63.06	4.79	61.41	61.39	61.23	6.62	67.85	63.55	4.30
17.50	59.92	59.92	59.75	7.95	62.95	63.08	62.88	4.82	61.18	61.21	61.07	6.63	67.70	63.29	4.41
17.25	59.60	59.69	59.54	8.01	62.63	62.84	62.66	4.89	60.97	61.05	60.86	6.69	67.55	63.02	4.53
17.00	59.16	59.20	59.09	7.26	62.20	62.36	62.22	4.13	60.54	60.73	60.58	5.77	66.35	62.76	3.59
16.75	58.77	58.82	58.82	7.33	61.81	61.98	61.94	4.21	60.15	60.15	60.05	6.10	66.15	62.41	3.74
16.50	58.48	58.53	58.54	7.51	61.50	61.66	61.70	4.35	59.84	59.84	59.88	6.17	66.05	61.94	4.11
16.25	58.30	58.35	58.35	7.30	61.31	61.47	61.46	4.19	59.59	59.59	59.62	6.03	65.65	61.46	4.19
16.00	58.00	58.05	58.05	7.05	60.99	61.15	61.14	3.96	59.44	59.44	59.44	5.66	65.10	60.99	4.11
15.75	57.44	57.49	57.49	7.41	60.34	60.50	60.50	4.40	59.06	59.06	59.06	5.84	64.90	60.52	4.38
15.50	56.96	57.01	57.01	8.09	59.80	59.96	59.96	5.14	58.29	58.29	58.29	6.81	65.10	60.04	5.06
15.25	56.56	56.61	56.61	8.29	59.37	59.54	59.53	5.37	57.74	57.74	57.74	7.16	64.90	59.57	5.33
15.00	56.15	56.20	56.20	7.90	58.90	59.07	59.06	5.04	57.34	57.34	57.34	6.76	64.10	59.09	5.01
14.75	55.76	55.82	55.82	8.19	58.50	58.66	58.66	5.35	56.93	56.93	56.93	7.08	64.01	58.56	5.45
14.50	55.38	55.44	55.44	6.69	58.07	58.24	58.23	3.90	56.53	56.53	56.53	5.60	62.13	58.00	4.13
14.25	54.81	54.87	54.87	8.31	57.43	57.60	57.59	5.59	56.13	56.13	56.13	7.05	63.18	57.44	5.74
14.00	54.50	54.56	54.56	8.28	57.09	57.26	57.25	5.59	55.44	55.44	55.44	7.40	62.84	56.93	5.92
13.75	54.14	54.20	54.20	8.21	56.68	56.84	56.84	5.57	55.08	55.08	55.08	7.33	62.41	56.55	5.86
13.50	53.67	53.73	53.73	8.03	56.16	56.32	56.32	5.44	54.71	54.71	54.71	7.05	61.76	56.18	5.59
13.25	53.32	53.38	53.38	7.65	55.77	55.93	55.93	5.10	54.16	54.16	54.16	6.87	61.03	55.80	5.23
13.00	53.19	53.26	53.26	7.43	55.65	55.81	55.81	4.88	53.75	53.75	53.75	6.94	60.69	55.43	5.26

Shaded Cells Represent Star Bend Setback Levee Segment Between RM 16.50 and 18.25

J:\Levee District No. 1\100372\O&M Manual & Veg Plan\Star Bend O&M Table 1 and Figure 7

SUPPLEMENT TO STANDARD OPERATION AND MAINTENANCE MANUAL SACRAMENTO RIVER FLOOD CONTROL PROJECT

UNIT No. 144
WEST LEVEE OF FEATHER RIVER FROM NORTH BOUNDARY OF LEVEE DISTRICT No. 1 TO NORTH BOUNDARY OF RECLAMATION DISTRICT No. 823 (MAINTENANCE AREA 3)

DRAFT

TABLE OF CONTENTS

SECTION 1 GENERAL 1
SECTION 2 AUTHORIZATION 4
SECTION 3 LOCATION 6
SECTION 4 PERTINENT INFORMATION 7
SECTION 5 CONSTRUCTION HISTORY 10
SECTION 6 PROJECT PERFORMANCE 13
SECTION 7 PROJECT COOPERATION AGREEMENT 14
SECTION 8 OPERATION 15
SECTION 9 EMERGENCY OPERATIONS 16
SECTION 10 MAINTENANCE AND INSPECTION OF UNIT NO. 144 LEVEE SYSTEM & ADJOINING FLOODPLAIN 19
SECTION 10.1 MAINTENANCE AND INSPECTION OF UNIT NO. 144 LEVEE SYSTEM 19
SECTION 10.2 MAINTENANCE, INSPECTION, AND VEGETATION MONITORING PLAN OF FLOODPLAIN ADJACENT TO UNIT NO. 144 LEVEE SYSTEM 27
SECTION 11 LEVEE SURVEILLANCE 35
SECTION 12 REPAIR, REPLACEMENT, AND REHABILITATION 36
SECTION 13 NOTIFICATION OF DISTRESS 38
SECTION 14 REFERENCES 39

TABLES

1 Lower Feather River Corridor 2010 Baseline Hydraulic Profile Conditions Along West Bank Levee, Unit No. 144

2 Unit No. 144 Settlement Monument Elevations at LD1 Star Bend Setback Levee

3 Summary of Inspection/Maintenance/Surveillance Requirements for Unit No. 144

FIGURES

1 Map of West Levee of Feather River, Unit No. 144 of Sacramento River Flood Control Project

2 Aerial Photo of West Levee of Feather River, Unit No. 144 of Sacramento River Flood Control Project

3 Lower Feather River Setback Levee at Star Bend near River Mile 18; LM 3.75 to 4.50

4 Star Bend Setback Levee Vegetation Management Areas near River Mile 18

5 Project Boundaries of Feather River Setback Levee at Star Bend

6 Local Units of Feather River Wildlife Area

7 Lower Feather River Corridor 2010 Baseline Hydraulic Profile Conditions along West Bank Levee, Unit No. 144

8 Vegetation and Associated “n” Values at Star Bend and O’Conner Lakes

9 Right-of-Way Map for Star Bend Setback Levee Area

DRAFT

APPENDICES

A As-Built Drawings (2 Separate Volumes)

A-1: Lower Feather River Setback Levee at Star Bend - LD1 Contract No. 09-02

A-2 Lower Feather River at Star Bend Irrigation System Relocation - LD1 Contract No. 09-01

B Resilient Seat Gate Valve Operation and Maintenance Information

C Superintendent's Guide to Operation & Maintenance of California's Flood Control Projects

D Flood-fighting Methods

E Central Valley Flood Protection Board Encroachment (CVFPB) Permits

CVFPB Permit No. 18191.for LD1 Setback Levee at Star Bend
CVFPB Permit No. 18437 for Tudor Mutual Water Company Irrigation Facilities
CVFPB Permit No. 18438 for Volcano Vista Farms Irrigation Facilities

F Habitat Enhancement Plan (HEP) for Feather River Setback Levee and Habitat Enhancement Project at Star Bend - March 6, 2009, (inclusive of USFWS Biological Opinions of February 6, 2009, for Star Bend VELB and September 9, 2005 for O'Conner Lakes VELB.

G Feather River Setback Levee and Phase 1 Habitat Enhancement Project at Star Bend 2010 Initial Monitoring Report - Year 1, prepared by Restoration Resources, inclusive of As-Builts:
A-1 As-Built Planting and Irrigation Plan, Sheet 1 of 3
A-2 As-Built Planning Plan, Sheet 2 of 3
A-3 Sample Planting Matrix, Sheet 1 of 3

H USACE Flood Damage Reduction Segment/System Inspection Report

DRAFT

SECTION 1 GENERAL

This Operation and Maintenance Manual (O&M Manual) Addendum has been prepared by Levee District No. 1 of Sutter County (LD1) to address operation and maintenance requirements for the improvements constructed on the west levee of the Feather River at Star Bend. These improvements and 20.65 acres of associated mitigation and habitat enhancement efforts for the Valley Elderberry Longhorn Beetle (VELB) and riparian habitat were completed as part of LD1's Lower Feather River Setback Levee at Star Bend Project. The Project improvements by LD1 at Star Bend near Feather River Mile (RM) 18.0 are an addition to the existing West Levee System of the Feather River, Unit No. 144 of the Corps of Engineers Sacramento River Flood Control Project.

DRAFT

Presented in Figures 1 and 2 is a map and aerial photo of the LD1 Boundaries and the alignment of the West Levee of the Feather River, Unit No. 144. The subject levee segment of Unit No. 144 is approximately 16.65 miles in length and is located along the right bank of the Feather River between RM 13.0 and RM 30.0. The low water channel of the Feather River meanders through an overflow area which has a variable width of 1,200 feet to over 6,000 feet with the incorporation of new setback levees. The levee of Unit No. 144 provides protection to Yuba City and adjacent agricultural lands to south against flood waters of the Feather River and is an essential feature of the Sacramento River Flood Control Project. The grade of the adopted flood plane profile in the Lower Feather River Corridor (LFRC) varies as noted in Table 1 and Figure 7. The USACE project design capacity in the LFRC is 300,000 cfs upstream of the Bear River (near River Mile 12) and 320,000 cfs downstream of the Bear River. The freeboard above the adopted project flood plane, also known as the 1957 Design Profile, varies greatly between a minimum of 2.8 feet to isolated sections in excess of 6.0 feet. There is considerable growth of trees and brush in the overflow portion of the channel, which at times may require control and removal to maintain the noted freeboard levels and the project design flood plane.

The project works covered in this addendum includes the entire west levee and the banks of the Feather River from the north boundary of LD1 (about 1.9 miles upstream of the State Highway 20 bridge crossing at Yuba City), southerly (downstream) approximately 17.5 miles to the common boundary between LD1 and former Reclamation District No. 823 (now included within State Maintenance Area No. 3).

Presented in Figure 3 is a map of the Setback Levee area at Star Bend. The setback levee improvements at Star Bend consist of a 23 to 25-foot high earthen levee beginning at the intersection of the east end of Star Bend Road and the existing right bank of the Feather River (Levee Mile 4.50) and continuing in a southeasterly direction to the approximate intersection of the easterly extension of Tudor Road with the Right bank of the Feather River (Levee Mile 3.75). The total length of the setback levee is approximately 3,400 feet. The setback levee improvement is located within the limits of Sutter County, east of the intersection of the Garden Highway and Star Bend Road, south of Yuba City, Sections 1 and 2 of Township 13 North, Range 3 East, and Section 35, Township 14 North, Range 3 East.

DRAFT

The setback levee geometry consists of a levee top width of approximately 20 feet, and side slopes that are 1 vertical to 3 horizontal. The foundation of the levee was excavated to provide an inspection trench (approximately 12 to 15 feet wide by 2 feet deep), and to construct a soil-bentonite (SB) cutoff wall to depths varying between 40 and 65 feet below existing natural grade. The embankment was constructed with homogenous material meeting the type, permeability, and gradation requirements specified by the USACE and California Department of Water Resources criteria. The completed setback levee was topped with an all-weather aggregate base (AB) road surface and the levee embankments were protected by applying erosion control seeding.

Soil-Cement-Bentonite (SCB) cutoff walls were constructed at the tie-ins of the new setback levee to the existing levee. These walls overlap the setback levee foundation SB cutoff wall by a minimum of 50 lineal feet and extend into the existing levee embankments a minimum of 200 feet beyond the north and south ends of the new setback. To install the cutoff walls, the existing

levee was degraded to a depth equal to 1/3 the levee height (as measured from the landside toe). The cutoff wall was constructed to a depth of 58 feet from the cutoff wall working platform at the north tie-in and 79 feet from the cutoff wall working platform at the south tie-in.

Former levee embankment material deemed unacceptable for the construction of the new setback levee was disposed of by placing it as backfill in the on-site borrow sources, inclusive of the O'Conner Lakes borrow areas.

This O&M Manual addendum also incorporates, the existing Supplement to the Standard O&M Manual for the Sacramento River Flood Control (SRFC) Project. This revised manual is the current supplement for Unit 144.

This O&M Manual addendum has been prepared in accordance with the guidelines contained in the USACE's Engineering Regulation ER 1110-2-401, "*Operation, Maintenance, Repair, Replacement, and Rehabilitation Manual for Projects and Separable Elements Managed by Project Sponsors*." **Section 10.2** of this O&M manual addendum, entitled, "**Maintenance, Inspection, and Monitoring Plan of Floodplain Adjacent to Unit No. 144 Levee System**" has been included to be responsive to maintaining the flow conveyance and flood safety attributes of the improved flood control system at Star Bend while collectively meeting the USFWS Biological Opinion (BO) mitigation, compensatory, and conservation conditions specifically developed for the Setback Levee at Star Bend. The vegetation plan is also responsive and consistent with the Central Valley Flood Protection Board's (CVFPB) desire to have a long-term maintenance plan that ensures flood safety and flood flow conveyance is preserved and maintained in the Lower Feather River while acknowledging the environmental conditions and potential incidental take considerations imposed by the USFWS. The vegetation management plan is also consistent with the short- and long-term goals and objectives of the Lower Feather River Corridor Management Plan (LFRCMP).

DRAFT

SECTION 2 AUTHORIZATION

The SRFCP is a comprehensive plan for controlling the floodwaters of the Sacramento River and its tributaries that was authorized by the California Legislature in the Flood Control Act of 1911. The SRFCP was approved by Congress in the Flood Control Act of 1917 (PL 64-367). Unit No. 144 of the SRFCP was initially built by local interests and later re-constructed to project grade and section by the USACE. Responsibility for operating and maintaining the completed works of Unit No. 144 was officially accepted by the Reclamation Board of the State of California (now known as the Central Valley Flood Protection Board) on December 18, 1951 and December 2, 1952. The Setback Levee Project at Star Bend improves a segment of the Feather River West Levee, which is an element of the Sacramento River Flood Control Project (SRFCP).

DRAFT

Improvements at the Feather River west levee at Star Bend and accompanying irrigation encroachments were authorized by the following Central Valley Flood Protection Board (CVFPB) permits, which are included in Appendix E:

- 18191 BD, issued on May 11 of 2009 to LD1, containing the following language: "To remove approximately 4,500 linear-feet of existing project levee and construct a 3,400-linear-foot-long setback levee (LM 4.5 to 3.75) with a slurry cutoff wall; and modifying the existing pipelines at Star Bend on the right (west) bank of the Feather River. The project is located south of Yuba City, northeast of the intersection of Highway 99 and Garden Highway (Section 1&2, T13N, R3E, MDB&M, Levee District 1 Sutter, Feather River, Sutter County,)".

- 18437 BD, issued on April 13 of 2009 to Tudor Mutual Company, containing the following language: "To abandon and remove existing irrigation pipe and install a 48-inch-diamter, 1,660 foot-long welded steel pipe from the existing pump station along the overflow area of the right (west) bank of the Feather River to the waterside toe of the new setback levee; install two 30-inch-diameter, 510-foot-long welded steel pipes up and over new setback levee; remove distribution box at landside toe of

existing Feather River Levee and place fill material on landside slope at upstream end of new setback levee. The project is located south of Yuba City, approximately one mile northeast of the intersection of Highway 99 and Garden Highway (Section 2, T13N, R3E, MDB&M, Levee District 1 Sutter, Feather River, Sutter County,)".

- 18438 BD, issued on April 13 of 2009 to Volcano Vista Farms, containing the following language: "To abandon and remove existing irrigation pipe and install a 24-inch-diamter, 1,660 foot-long welded steel pipe from the existing pump station along the overflow area of the right (west) bank of the Feather River to the waterside toe of the new setback levee; install an 18-inch-diameter, 510-foot-long welded steel pipe up and over new setback levee; remove distribution box at landside toe of existing Feather River Levee and place fill material on landside slope at upstream end of new setback levee. The project is located south of Yuba City, approximately one mile northeast of the intersection of Highway 99 and Garden Highway (Section 2, T13N, R3E, MDB&M, Levee District 1 Sutter, Feather River, Sutter County,)".

DRAFT

The improvements at Star Bend were also permitted by the USACE by way of the following documents:

- Memorandum dated June 1, 2009, from the USACE Director of Civil Works to the Commander of the South Pacific Division approving the Central Valley Flood Protection Board's (CVFPB) 408 Application.
- Letter of Permission from the USACE Sacramento District Engineer outlining conditions of Section 408 approval, dated June 16, 2009.

USACE also issued a memo dated of June 15, 2009, indicating the subject improvements at Star Bend, inclusive of the Setback levee and the associated habitat mitigation/enhancements are eligible for credit under Section 104 of the WRDA of 1986.

SECTION 3 LOCATION

The subject levee segment of Unit No. 144 is approximately 16.65 miles in length and is located along the right bank of the Feather River between RM 13.0 and RM 30.0. The levee of Unit No. 144 provides protection to Yuba City and adjacent agricultural lands to south in Sutter County, California, against flood waters of the Feather River and is an essential feature of the Sacramento River Flood Control Project. Presented in Figures 1 and 2 is a map and aerial photo of the LD1 Boundaries and the alignment of the West Levee of the Feather River, Unit No. 144.

The improvements at Star Bend, located in southern portion of levee Unit No. 144, were constructed between 2009 and 2010. The improvements at Star Bend are located approximately six miles south of Yuba City at approximate River Mile 18 (between Levee Miles 3.5 and 4.5 of Unit No. 144) on the right (west) bank of the Feather River in Sutter County California. The closest street intersection to the project is the Garden Highway at Star Bend Road. Specifically, the setback levee at Star Bend is located within Sections 1 & 2, T13N, R3E, MDB&M.

DRAFT

SECTION 4 PERTINENT INFORMATION

The setback levee at Star Bend within Unit No. 144 was constructed using approximately 385,000 cubic yards of embankment material meeting the requirements of USACE Engineering Manual EM 1110-2-1913, "*Design and Construction of Levees,*" and Sacramento USACE District Standard Operating Procedure SOP-EDG-03, "*Geotechnical Levee Practice*." All but 51,000 cubic yards of the embankment material was obtained from the removal of the existing levee section between LM 3.75 and LM 4.50, and a collection of four nearby borrow sites in the O'Conner Lakes and Star Bend Area. Approximately 51,000 cubic yards of embankment material was imported from an off-site source located approximately 13 miles to the south of Star Bend within Reclamation District 1001 near State Highway 99 and Striplin Road.

At Star Bend the levee foundation cutoff wall was constructed at the levee centerline, beneath the new setback levee prism, to reduce the hydraulic gradient and seepage flows to acceptable levels in accordance with USACE requirements. Material for construction of the slurry cutoff wall was excavated from the cutoff wall trench and mixed with bentonite slurry, cement (at the cutoff wall tie-in locations), and water to form an impermeable barrier three feet in width. A total of 44,050 square feet of Soil Cement Bentonite (SCB) Cutoff Wall and 181,076 square feet of Soil Bentonite (SB) cutoff wall were installed as part of the project. Included as Appendix A (in separate volumes), are the as-built drawings for the Star Bend Setback Levee, which provide specific cutoff wall alignment and depth information.

The Tudor Mutual Water Company (TMWC) owns and operates a pumping plant at Star Bend. The pumping plant also contains a pump owned and operated by Volcano Vista Farms (VVF). Modifications to the pump station, and its water distribution and delivery system, were required to accommodate the project improvements at Star Bend. One 18-inch and two 30-inch diameter welded steel pipelines pass over the levee (with approximately three feet of soil cover) near the TMWC distribution box located at the easterly terminus of Star Bend Road. Each pipeline has been equipped with a positive closure device (gate valve) at the waterside hinge point at the top of the levee slope. The purpose of the positive closure devices is to provide a means of

DRAFT

completely closing off the conduits in the event of high water in the Feather River. The gate valves are Resilient Seat Gate Valves and manufactured by the Clow Valve Company. Operation and maintenance information specific to this equipment is included as Appendix B. Each pipeline is also equipped with air relief valves at the waterside and landside top of slope. An overall Operation and Maintenance manual specific to the TMWC system has been prepared separately to address the pump station, pipeline and siphon facilities. The TMWC and VVF irrigation systems, inclusive of their collective pipelines, siphons and distribution structures are authorized encroachments on the updated Unit No. 144 levee system as noted in Appendix E.

A former seepage relief well pump station and its discharge lines located north of Star Bend Road were replaced with a reconstructed pump station placed at least 10 feet beyond the landward toe of the completed setback levee. The original pump station was installed as part of PL 84-99 emergency repairs constructed by the USACE at Star Bend in 1997. (The emergency repairs were completed on October 31, 1997 by Syblon Reed Corp. under Contract No. DACW05-97-C-0122, Specification No. 9885E, Drawing No. 04-04-617.) The pump station conveys drainage water over the top of the levee generated from a series of seepage relief wells located landward of the levee system north of Star Bend Road. Two new pipelines discharge the seepage flow over the levee and are equipped with combination siphon breaker/air relief valves at the landside hinge point of the levee. They are also equipped with flap gates at their points of discharge. The pump station sump was reconstructed to be identical to the original pump station configuration with the exception that the station has been modified to also accept some overland, localized interior drainage flows from south of Star Bend Road. This drainage is conveyed by an 18-inch cmp culvert beneath Star Bend Road to a manhole connection just upstream of the pump station inlet pipe's connection to the sump structure. Mechanical and electrical equipment was removed from the former sump structure and reinstalled at the new sump structure.

Former irrigation pipelines were removed from under the setback levee footprint and backfilled with levee-grade material. Three utility poles providing electrical power to the Star Bend Pump Station were relocated away from the existing levee prism to allow it to be degraded as part of the project.

DRAFT

The project improvements at Star Bend incorporated environmental and mitigation enhancements, including the planting of elderberry shrubs and associated riparian vegetation on 20.65 acres waterward of the new setback levee. These mitigation and habitat enhancements are currently maintained by LD1 and its designated contractor, Restoration Resources. For specific management strategies and maintenance activities associated with the vegetation at Star Bend refer to **Section 10.2** of this O&M manual addendum, entitled, "**Maintenance, Inspection, and Monitoring Plan of Floodplain Adjacent to Unit No. 144 Levee System**". Responsible agencies should remain diligent in ensuring the mitigation and habitat enhancements are maintained and monitored for their intended mitigation and enhancement purposes but do not present a hindrance to ongoing maintenance of the adjoining levee system located within the floodway and within 50 feet of the setback levee. These same enhancements should also be monitored and maintained to allow conveyance of the 100-yr. and 200-yr flow events and the USACE design flow of 300,000 cfs through the Lower Feather River Corridor between the Yuba and Bear Rivers at or below the USACE 1957 design profile mentioned in Section 10.1 of this O&M Manual Addendum. Refer to Figure 4 which shows the location of the existing 20.65 acre of VELB mitigation and habitat enhancement area in relation to the new setback levee and adjoining areas suitable for future habitat mitigation and enhancement opportunities.

Five settlement monitoring gages were installed along the setback levee at Star Bend during construction. After the first season, and through the second season, the gages should be monitored every 3 months. Thereafter, the elevation readings should be recorded annually until subsidence readings indicate the levee has settled less than 0.1 foot over a twelve month period. The project design anticipated a total post-construction settlement of approximately four inches (0.33 feet). Should the settlement exceed this amount, an engineer should be consulted to evaluate the levee height with respect to the design water surface. A summary of the initial settlement readings taken during the summer of 2010 are included in Table 2.

DRAFT

SECTION 5 CONSTRUCTION HISTORY

Unit No. 144 of the Sacramento River Flood Control Project was originally built by local interests and later re-constructed in various stages between 1939 and present to the grades and sections adopted by the USACE, the State, and the Local Maintaining Agency (LMA), Levee District One of Sutter County. The construction work required to bring the local levee unit to project grade was accomplished under the following contracts:

DRAFT

a. Levee enlargement of the west levee of the Feather River in the vicinity of Yuba City from station 1380+00 to station 49+40 as shown on Drawing No. 44-172-1; sheets 2, 3, and 4 of Exhibit B, was constructed under Contract No. W-1105-Eng-2350 by Hemstreet and Bell, Contractors, and completed on 26 January 1939.

b. Levee enlargement of west levee of the Feather River from Yuba City to Shanghai Bend and from Starr Bend 2 miles southerly as shown on Drawing No. 4-4-188-1; sheets 2, 3, and 4 was constructed under Contract No. W-1105-eng-2405 by Morrison & Knudsen Company, Contractors, and completed 3 September 1939.

c. Levee enlargement of west levee of the Feather River from Shanghai Bend to Starr Bend and from 2 miles south of Starr Bend to opposite Bear River as shown on Drawing No. 4-4-205-1; sheets 2 to 8, inclusive, was constructed under Contract No. W-1105-eng-2694 by Morrison & Knudsen Company, Contractors, and completed 16 November 1940.

d. A short section of levee crown of the west levee of the Feather River was surfaced for patrol road purposes in the vicinity of Yuba City under Contract No. DA-04-167-eng-828 by Browne and Krull, Contractors, and completed on 2 December 1952.

e. Emergency levee repairs along the west levee of the Feather River upstream and downstream from the 10th Street Bridge was accomplished under Contract No. DA-04-167-CIVENG-57-60 by W.H. Darrough and Sons, during the period from 1 October 1956 to 18 October 1956, Specification No. 2238, Drawing No. 4-4-431.Emergency repair and reconstruction of approximately 8,000 feet of destroyed levee on the right bank of the Feather River downstream from Yuba City was accomplished under Contract Nos. DA-04-167-CIVENG-56-41, 56-45, 56-46, 56-102, 56-169, and 56-173 by H. Earl Parker, Inc., San Francisco Bridge Company, Associated Dredging Company, and Pacific Gas and Electric Company, during the period from 26 December 1955 to 30 April 1956, Drawing No. 4-13-405.

f. Emergency levee repairs and bank paving, right bank of the Feather River at Starr Bend was accomplished under Contract No. DA-04-167-CIVENG-56-154 by Lester

L. Rice and Sons during the period from 5 March 1956 to 13 March 1956. No drawings made.

h. Repairing levee of right bank of Feather River from Yuba City from 5th Street Bridge ½ mile downstream was accomplished under Contract No. DA-04-167-CIVENG-56-161 and 56-75 by Baldwin Contracting Company during the period from 29 December 1955 to 15 January 1956. No drawings made.

i. Emergency relief wells and drains along the Feather River near Yuba City were installed under Contract No. DA-04-167-CIVENG-57-76 by C. S. Phillips Construction Company during the period from 13 November 1956 to 12 April 1957, Specification No. 2256, Drawing No. 4-4-435.

j. Emergency levee repairs, west levee Feather River, relief trench drain at Yuba City was accomplished under Contract no. DA-04-167-CIVENG-57-109 by Baldwin Contracting Company during the period from 17 February 1957 to 14 May 1957, Specification No. 2302, Drawing No. 4-4-437.

k. Emergency levee repairs, right bank Feather River at Shanghai Bend was accomplished under Contract No. DA-04-167-CIVENG-57-65 by H. Earl Parker, Inc. during the period from 8 October 1956 to 12 November 1956, Specification No. 2252, Drawing No. 4-4-433.

l. Drainage pump and sump, right bank Feather River at Shanghai Bend was accomplished under Contract No. DA-04-167-CIVENG-57-112 by Munz Pump, Inc. during the period from 11 March 1957 to 21 June 1957, Specification No. 2295, Drawing No. 4-4-438.

m. Levee stabilization, right bank Feather River, Levee Districts 1 and 9 was accomplished under Contract No. DA-04-167-CIVENG-60-73 by H. Earl Parker, Inc. during the period from 11 May 1960 to 28 July 1960, Specification No. 2655, Drawing No. 4-4-508.

n. Bank protection on the right bank of the Feather River at Mile 24.5 (Unit No. 8) was accomplished under Contract No. DA-04-167-EIVENG-66-50 by H. Earl Parker, Inc. during the period from 18 October 1965 to 14 June 1966. Specification No. 3154. Drawing No. 50-4-4004.

o. Levee repair on the right bank of the Feather River between Levee Mile 2.35 and Levee Mile 3.52 and at Levee Mile 1.5 (LD1 site) located south of Yuba City along right bank of the Feather river between Levee Mile 1.43 and Levee Mile 1.60. Repair consists of seepage berms and a toe drain. Construction was completed 7 September 2001 under Contract No. DACW05-00-C-0041, Specification No. 1102E, Drawing No. 4-4-627.

DRAFT

p. Emergency levee repairs, at various locations along the right bank of the Feather River in Levee District 1 was completed on 31 October 1997 by Syblon Reed Corp. under Contract No. DACW05-97-C-0122. Specification No. 9885E, Drawing No. 04-04-617.

q. Emergency levee repairs, west levee Feather River, Levee Miles 14.60 to 16.02 in Levee District 1 were completed in July 2001 by BCN Company under Contract No. DACW05-00-C-0032. Specification No. 1101E, Drawing No. 4-25-626.

r. Emergency levee repairs, west levee Feather River Levee Miles 11.00 to 11.50 were completed on December 1999 by Clearwater Group Inc. under Contract No. DACW05-98-D-0035. Specification No. 9998E, Drawing No. 4-4-620.

s. Construction of the Star Bend Setback Levee: A construction contract was awarded to Nordic Industries of Marysville, California in June, 2009. The project was designed by Wood Rodgers, Inc. and construction management was provided by MHM Engineers, Inc. Notice to proceed with construction occurred on or around July 6, 2009. Cutoff wall construction began with the northern SCB wall on July 17, 2009. Both SCB walls were installed early in construction to allow SCB material to cure as soon as possible. Once cured, the existing levee tie-in areas and overlap portions of the SCB walls were degraded for tie-in of the setback levee foundation Soil-Bentonite (SB) wall. The SB wall installation began on or around July 30, 2009 and was complete on August 24, 2009. Earthwork began on or around August 22, 2009, and was complete on November 2, 2009. Most of the irrigation system modifications at Star Bend for the Tudor Mutual Water Company and Volcano Vista Farms were mostly constructed by Mountain Cascade, Inc. between April and November of 2009. However, the portion of irrigation lines constructed up an over the new setback levee were constructed by Nordic Industries, with modifications and completion of operational appurtenance continuing into November of 2010. Vegetation planting, inclusive of transplanting of VELB shrubs onsite within the 20.65 acre authorized and obligatory Phase 1 VELB mitigation and enhancement site took place over a period of two years, during the VELB dormancy periods. LD1 contracted with River Partners to transplant existing VELB shrubs prior to construction of the levee in February and early March of 2009; and Restoration Resources planted additional VELB seedlings and associate riparian vegetation plants in the VELB mitigation and enhancement area during the months of January through March of 2010. Restoration Resources also planted blackberry and wildrose vines in the late winter and early spring of 2010 on 2.46 acres to provide protection and discourage future disturbances of a known cultural site at Star Bend.

DRAFT

SECTION 6 PROJECT PERFORMANCE

The setback levee project at Star Bend replaced a segment of the river's existing right bank levee that constrained flood flows in the Feather River and presented an unacceptably high risk for levee failure due to levee seepage. Construction of the setback levee removed this constraint and reduced water surface elevations and velocities along the levees upstream of the project site. Modeling analyses performed during the project feasibility phase indicated that a break in the Feather River west levee at Star Bend would inundate the Sutter Basin (including southern portions of Yuba City) in a matter of days. As of the writing of the feasibility study, the area affected by a break at Star Bend includes a population of 25,000 people, $262 million in property improvements, and $277 million in assessed land values.

The project was designed based upon the 1957 USACE hydraulic profile of the Feather River, which exceeds the 100-year and 200-year water surface elevations at Star Bend. The 1957 USACE hydraulic profile indicates a Feather River stage of approximately 64.1 feet (NGVD 29) at the northern end of the project near Star Bend Road near River Mile 18.25; and a relatively uniform slope of the water surface to 63.0 feet (NVGD 29) at the southern tie-in near Tudor Road, near River Mile 17.25. The levee height as constructed provides at least three feet of freeboard above these elevations, plus additional height as required in FEMA 44 CFR Chapter 1, Section 65.10 of the National Flood Insurance Program.

For the USACE 1957 design flow event, the total design flow for the Lower Feather River between the Yuba and Bear Rivers is 300,000 cubic feet per second.

For the purposes of this manual, the term "flood" or "high water period" shall refer to water stages when the water surface reaches or exceeds any one of the following staff gage readings on the California Data Exchange Center (CDEC): 65.0 on the Feather River at Yuba City (YUB); 57.0 on the Feather River at Boyd's Landing (FBL); or 40.0 on the Feather River near Nicholas (NIC). All staff elevations are in U.S. Corps of Engineers Datum (USED).

DRAFT

SECTION 7 PROJECT COOPERATION AGREEMENT

Assurance of cooperation by local interests is provided by California State Legislation, as contained in Chapter 3, Part 2, Division 5, of the California State water Code. Responsibility for operating and maintaining the competed works for Unit No. 144 was officially accepted by the Reclamation Board of the State of California (now known as the Central Valley Flood Protection Board or the CVFPB) on 18 December 1951 and 2 December 1952.

The project improvements at Star Bend were funded by a cooperative Early Implementation Program (EIP) agreement between LD1 and the DWR. The source of the funds was the California Disaster Preparedness and Flood Prevention Bond Act of 2006; and the California Safe Drinking Water, Water Quality and Supply, Flood Control, River and Coastal Protection Bond Act of 2006, including approximately a 20 percent cost-share furnished by way of LD1 and its local cost sharing partners (Yuba City, Sutter County, and other public and private interests).

An agreement regarding potential reimbursement or credit of state and local funds expended for the project improvements at Star Bend by the Federal government has been established between the CVFPB and the USACE, as outlined in Section 104 of Public Law 99-662. The USACE issued a memo dated June 15, 2009, indicating the subject improvements at Star Bend, inclusive of the Setback levee and the associated habitat mitigation/enhancements are eligible for credit under Section 104 of the WRDA of 1986.

DRAFT

SECTION 8 OPERATION

The Project improvements by LD1 at Star Bend near Feather River Mile (RM) 18.0 are an addition to the existing West Levee System of the Feather River, Unit No. 144 of the Corps of Engineers Sacramento River Flood Control Project. The subject levee segment of Unit No. 144 is approximately 16.65 miles in length and is located along the right bank of the Feather River between RM 13.0 and RM 30.0. The low water channel of the Feather River meanders through an overflow area which has a variable width of 1,200 feet to over 6,000 feet with the incorporation of new setback levees. The grade of the adopted flood plane profile in the Lower Feather River Corridor (LFRC) varies as noted in Table 1 and Figure 7. The USACE project design capacity in the LFRC is 300,000 cfs upstream of the Bear River (near River Mile 12) and 320,000 cfs downstream of the Bear River. The freeboard above the adopted project flood plane, also known as the 1957 Design Profile, varies greatly between a minimum of 2.80 feet to isolated sections in excess of 6.00 feet. There is considerable growth of trees and brush in the overflow portion of the channel, which at times may require control and removal to maintain the noted freeboard levels and the project design flood plane. The maintenance and operation of the overflow channel of the Feather River for Unit No. 144 (as defined in paragraph 2-03.of the Supplement to Standard O&M Manual dated August 1955) is limited to flood control as specified in the standard O&M manual for Unit No. 144 and as more fully described herein Sections 8 through 10 of this Addendum.

DRAFT

The Operation and Maintenance (O&M) of the improved levee system at Star Bend and the balance of Unit No. 144 falls under the jurisdiction of the CVFPB through the Sacramento and San Joaquin Drainage District. The operation and maintenance of the improved levee system and its associated 20.65 acres of the VELB mitigation and habitat enhancement is the responsibility of LD1, under the supervision of the DWR, collectively referred to as the O&M Provider or Superintendent. For specific management strategies and maintenance activities associated with the vegetation at Star Bend refer to **Section 10.2** of this O&M manual addendum, entitled, "**Maintenance, Inspection, and Monitoring Plan of Floodplain Adjacent to Unit No. 144 Levee System**".

SECTION 9 EMERGENCY OPERATIONS

Emergency surveillance, communication, and chain of responsibility for the Unit No. 144 levees and associated infrastructure are to be under existing protocols of LD1, under the supervision of DWR. The emergency operations are as recommended in Section 8 of the USACE's "*Standard Operation and Maintenance Manual for the Sacramento River Flood Control Project,*" and Section 6 of the DWR's "*Superintendent's Guide to Operation & Maintenance of California's Flood Control Projects*." The levees should be patrolled during "high water events" as specified in these documents, and in LD1's Flood Safety Plan for Unit No. 144 that may be updated periodically. (See Section 14 - References Specific to Unit No. 144.)

For the purposes of this addendum the term "high water events" shall refer to flows when the water surface reaches or exceeds any one of the following conditions: (a) a reading of 65.0 on the California Data Exchange Center (CDEC) Yuba City (YUB) continuous water stage recorder and staff gage located near the right bank of the Feather River at the 5th Street Bridge in Yuba City; (b) a reading of 57.0 on the CDEC continuous water stage recorder and staff gage located on the right bank of the Feather River at Boyd's Landing (FBL) near River Mile 21.0, approximately three miles south of Yuba City; or (c) a reading of 40.0 on the CDEC continuous water stage recorder and staff gage located on the left bank of the Feather River near Nicolaus (NIC). All staff elevations are in U.S. Corps of Engineers Datum (USED).

Particular attention should be given to monitoring the performance of the setback levee at Star Bend during "high water events" in the levee's first few years of operation, to ensure that the setback levee functions as designed. Attention should be paid to any cracking or slumping of the waterside slope and crown. Additionally, erosion-protecting vegetation may not be fully established during the first few flood seasons. Significant erosion will be less likely to occur on the levee when ground cover is well established. After initial levee performance has been confirmed, general operation and maintenance inspection should continue.

DRAFT

Standard flood-fighting techniques should be employed during high water events and observed problem areas should be addressed promptly. Proper response during high water conditions will include measures to prevent erosion and the prompt repair of any wave wash or scour damage. Typical flood-fighting methods will include the following:

- High water patrolling and reporting of trouble spots.
- Wave wash protection of eroded landside slope.
- Caving bank protection.
- Scour hole repair.
- Topping of low or eroding spots on the levee crown using sandbags, lumber and sack, or mud box bulkhead construction.
- Flood barrier construction.
- Sandbagging to control boils that are issuing sediment.
- Brushing and sacking the landside levee slope.
- Draining the landside levee slope.

Suggested flood-fighting protocols are described in detail in the documents listed below.

- *"Standard Operation and Maintenance Manual for the Sacramento River Flood Control Project*;" revised May 1955, U.S. Army Corps of Engineers, Sacramento District.

DRAFT

- "*Superintendent's Guide to Operation & Maintenance of California's Flood Control Projects*," State of California, Department of Water Resources, Division of Flood Management, undated (Appendix C).

- "*Design and Construction of Levees*," U.S. Army Corps of Engineers, EM 1110-2-1913, 30 April 2000.

A good summary of flood-fighting methods is contained in the DWR publication entitled, "*Flood Fighting Methods*," dated August 2003. This publication is included as Appendix D for reference.

DRAFT

SECTION 10 MAINTENANCE AND INSPECTION OF UNIT No. 144 LEVEE SYSTEM & ADJOINING FLOOD PLAIN

Section 10.1 addresses maintenance and inspection of the Unit No. 144 levee system, inclusive of the setback levee improvements at Star Bend; and Section 10.2 addresses the maintenance, inspection, monitoring and reporting requirements for vegetation in the adjoining floodplain of the Lower Feather River Corridor (LFRC), particularly for the enlarged floodplain at Star Bend and other areas considered for future habitat mitigation and enhancement.

DRAFT

SECTION 10.1 Maintenance and Inspection of Unit No. 144 Levee System

A summary of inspection and maintenance requirements for the entire levee system of Unit No. 144 is shown in Table 3. The basic inspection and maintenance related to the project levees is as stated in Sections 4, 5, 6, and 7 of the USACE's *"Standard Operation and Maintenance Manual for the Sacramento River Flood Control Project,"* and Section 4 of DWR's *"Superintendent's Guide to Operation & Maintenance of California's Flood Control Projects*." Unless specifically addressed herein, refer to these documents for further guidance.

10.1.1 Types of Inspection

Routine Inspection

Routine inspections should include observation of the levee crown and slope for evidence of soil erosion, animal burrows, weed infestation, tree growth, and other undesirable vegetative growth. Evidence of seepage and/or boils should be reported immediately and evaluated in a timely manner by a qualified engineer. Items to be observed and evaluated are described in more detail under "Inspection and Maintenance Guidelines" below. The inspection checklist and forms provided in Appendix H, the USACE's *"Flood Damage Reduction Segment/System Inspection Report,"* should be used for inspection reporting.

As indicated in the USACE's "Standard *Operation and Maintenance Manual for the Sacramento River Flood Control Project*," inspections should be made:

- immediately prior to the beginning of each flood season to ensure the structural integrity of the levees, allowing sufficient time to complete necessary repairs;
- immediately following each major high water period;
- at intervals not exceeding 90 days; and
- at such intermediate times as may be necessary to ensure the best possible care of the levee.

DRAFT

Special Inspections

Special inspections are required immediately after significant natural events such as high water events and earthquakes, or as otherwise deemed necessary by operating or engineering personnel. These inspections should follow the same procedures and level of care as during formal routine inspections. Inspection of the levee should be performed after all earthquakes of notable intensity (i.e., able to be felt). The entire length of the levee should be traveled and particular attention should be given to observing the levee crown and slope for evidence of slumps, cracking, sagging, subsidence, liquefaction-induced boils, or other signs of levee or foundation deficiencies. Any slumps, cracks, sagging, or other damage should be immediately marked on the ground, reported, and evaluated by a qualified engineer. Specifically included are:

- Earthquakes measuring less than 5.0 on the Richter scale; inspections shall be performed when the epicenter is within 3 miles of the project.

- Earthquakes measuring 5.0 to 6.0 on the Richter scale; inspections shall be performed when the epicenter is less than 30 miles from the project.

- Earthquakes measuring 6.0 or higher on the Richter scale; inspections shall be performed when the epicenter is less than 50 miles from the project.

- Inspections shall also be performed after any earthquake in which specific reports of damage are received.

DRAFT

10.1.2 Inspection and Maintenance Guidelines

Crown Roadways

The levee crown should be maintained and all crown roadways, ramps, gates, and access roads should be properly maintained and kept serviceable. This work involves periodically grading and gravelling road surfaces following the same procedures and requirements outlined in Section 4 of the USACE's "*Superintendent's Guide to Operation & Maintenance of California's Flood Control Projects*." Maintenance will ensure that no ruts, pot holes, or other depressions are on the levee. The levee crown, embankments, and access road crowns should drain properly without any ponded water. Gates are particularly subject to vandalism and need to be repaired as needed.

Via Star Bend Road the public does have access to the O'Conner Lakes area located waterward of the levee and managed by the California Department of Fish and Game. To the best of their ability, the Superintendent should discourage vehicular and pedestrian traffic on the levees outside of the area designated for public access. If public use of the levee is observed, the Superintendent should note the details and circumstances and report these activities to the proper authorities for action.

Rodent Activity

Squirrels and other burrowing rodents can threaten the structural integrity of levees by loosening soil, increasing the risk of erosion and sloughing, and increasing the likelihood of piping-type erosion failures. Therefore, a rodent control program should be implemented year-round for the modified levee. The rodent control program should use the same procedures and requirements as outlined in Section 5 of DWR's "*Superintendent's Guide to Operation & Maintenance of California's Flood Control Projects*."

DRAFT

Vegetation Management on Levee Slopes and First 15 to 50 Feet Beyond Toes of Levee

Mowing, burning, spraying, and other vegetation management procedures should be implemented as outlined in Section 3 of DWR's "*Superintendent's Guide to Operation & Maintenance of California's Flood Control Projects.*"

Grasses and ground covers that provide erosion protection and yet permit inspection and flood-fighting are permitted. Inspections should determine if there is good coverage of grass or ground cover over the levees and note those areas that are deficient. The Superintendent and associated staff should take no action, such as burning grass and weeds during inappropriate seasons, which may retard or destroy the growth of ground cover during the flood season. Broadleaf weeds growing among desirable grasses should be controlled by selective herbicides. Ground cover should be maintained at 12 inches in height or less.

Trees and shrubs are not permitted to grow on the levee slopes or crown. Any plant that obscures the view from the crown of the levee to the toe where boils and leaks would be most likely to occur should be removed. Any plants that may impede flood-fighting efforts, such as construction of sack rings to control boils, should be removed. In accordance with USACE ETL 1110-2-571, "*Guidelines for Landscape Planting and Vegetation Management at Levees, Floodwalls, Embankment Dams, and Appurtenant Structures,*". In accordance with Local Maintaining Agency (LMA) standards, all brushy and woody vegetation over one inch in diameter at the ground level should be removed from: (1) the levee slopes; (2) and an area that extends for the first 50 feet from the waterside and landside toes along the 3,400 lineal ft. section of setback levee between Star Bend and Tudor Roads; and (3) an area that extends for the first 15

feet from the waterside and landside toes for the balance of the Unit No. 144 levee outside of the Star Bend Area. Valley elderberry shrubs less than one-inch in diameter are not considered valuable habitat to the threatened and endangered Valley Elderberry Longhorn Beetle (VELB) The standard adopted by the LMA for removing brushy and woody vegetation of one-inch in diameter and less on and adjacent to the levee slopes will eliminate the risk of any young elderberry shrubs of less than one-inch in diameter from becoming jurisdictional under the guidelines adopted by the USFWS for the protection of the VELB. In the event the elderberry shrubs grow in excess of one-inch in diameter at the ground level they become jurisdictional and may limit the (LMA) from performing routine maintenance and inspection on or near the subject levee slopes.

DRAFT

In general, vegetation within any existing access easements landward and waterward of the levee toe shall be limited to groundcovers to allow unimpeded maintenance activities, inspections, and flood fighting. Vegetation should be maintained in such a manner as to allow for unimpaired passage and operation of maintenance equipment and flood-fighting efforts.

Please refer to **Section 10.2** of this O&M manual addendum, entitled, "**Maintenance, Inspection, and Monitoring Plan of Floodplain Adjacent to Unit No. 144 Levee System**" for specific vegetation control and management measures for the adjoining floodplain, particularly for the Valley Elderberry Longhorn Beetle (VELB) conservation areas at Star Bend. The VELB conservation area of 20.65 acres is shown in Figure 4, and special vegetation management procedures must be adhered to while working in or near this area that is immediately water-ward of the waterside access road adjacent to the setback levee at Star Bend. Although certain restrictions apply for maintaining the mitigation and habitat enhancements in this enlarged portion of the floodplain, this same area should be maintained to keep the roughness coefficient "n" values at .07 or less. The "n" values of .07 or less are further defined by the types and densities of plantings that have been installed at Star Bend shown and described in Appendix G - Feather River Setback Levee and Phase 1 Habitat Enhancement Project at Star Bend 2010 Initial Monitoring Report - Year 1, including As-built Exhibit Sheets 1, 2 and 3 of 3, prepared by Restoration Resources.

Erosion Control and Repair

All levee slopes should be inspected for soil erosion and animal burrows Vegetation should be maintained to allow inspection of the slopes. Dragging of the levee slopes to repair minor surface erosion or irregularities and prevent serious erosion should be performed on an as-needed basis. Procedures for dragging are outlined in Section 4.22 of DWR's "*Superintendent's Guide to Operation & Maintenance of California's Flood Control Projects*." More extensive erosion features should be repaired as outlined in Section 12.1 of this O&M Manual.

During and immediately after high water events, LMA personnel should travel the length of the levee and observe the waterside slope and levee crown for indications of erosion. All erosion and scour holes resulting from high flows and wave action should be immediately repaired and areas promptly stabilized and revegetated, if needed.

Seepage

During routine inspections, personnel should travel the length of the levee and observe the lower levee slope and area along the landward toe for indications of seepage and boils. Any evidence of seepage, sinkholes, and/or boils should be immediately reported and evaluated by a qualified engineer. During and immediately after high water events, i.e. any event in which the river rises above the level that would subject the levee to water against its waterside slope, personnel should travel the length of the levee and observe the lower landside levee slope and area along the toe for indications of seepage and boils. Areas of seepage and/or boils should be immediately reported and evaluated by a qualified engineer.

Underseepage Relief Wells

All of the relief wells within the Unit No. 144 levee system flow infrequently, statistically about once every 7 to 9 years when high-water rises onto the slopes of the levee system. Seepage relief wells of the Unit No. 144 levee system constructed by the USACE and formally turned over to the Local Maintaining Agency (LD1) should be visually inspected annually, preferably immediately prior to normal high-water seasons and more often during high water events when

DRAFT

water is against the waterward slope of the levee. Flow quantities in the relief wells should be measured before, during and for an appropriate period after a significant peak in the river level in accordance with ER 1110-2-1942, paragraph 8.d. Pumping tests and audio visual inspections should be performed on wells that flow infrequently at fiver-year intervals. The LMA is implementing a relief well pump testing and audio visual inspection program that reviews 20% of all its relief wells every year for Unit No. 144, resulting in every well being tested and video-inspected at least once during every five year period. The tests performed should determine the current specific capacities of the wells and their sedimentation concentration per ER 1110-2-1942 paragraph 9.a. The amount of sediment in the wells should be measured after flood flows or high water events, and before and after performance of pumping tests. To chart long-term performance of each well the periodic test data and sedimentation concentration data should be properly recorded and available for easy retrieval during future high-water events.

DRAFT

Cracking, Settlement, and Slips

During routine inspections, personnel should travel the length of the levee and observe the crown and levee slopes for indication of cracking, slumping, or localized slippage of the levee slope. Any cracks, scarps, or areas of subsidence should be immediately marked on the ground, reported, and evaluated by a qualified engineer.

Encroachments

During routine inspections, personnel should check to determine whether trash, debris, excavations, structures, or other obstructions are present within the project easement area. If non-permitted encroachments are observed, the Superintendant should contact the encroaching entity by mail and instruct them to remove the encroachment. The Superintendant should also notify the CVFPB of any non-permitted encroachments.

The Superintendant should keep a log of encroachments within the project right of way with location, description, encroachment authorizing document (permit #) and any other details important to the Superintendant to ensure proper operation and maintenance. Listed below are

the drainage and irrigation structures which may or may have extended through the Unit No. 144 levee as identified in Paragraph 2-02.a of the former supplement dated August 1955. Various other encroachments, particularly irrigation structures have been added since 1955, such as the Tudor Mutual Water Company and Volcano Vista Farms pipelines located at the north end of the Star Bend Setback levee and as further described in detail in Section 5, paragraph a. of this addendum.

DRAFT

Drainage and Irrigation Structures on Right Bank of Feather River, Unit No. 144

As Identified in 1955 Supplement

Location Station	Size & Kind of Pipe	Other Structure Description
1414+10	3” Steel	Extra Strong Galvanized Pipe
1468+79	36” Corrugated Metal Pipe (CMP)	
1469+70	24’ CMP	Yuba City Outfall Sewer, No. 781 Gate Valve
1473+60	18” Steel	
109+23	12” Steel	
333+43	24” Steel	
358+00	8” Steel	
477+00	8” Steel	
486+00	10” Steel	
497+00	6” Steel	
529+00	12” Steel	
537+00	10” Steel	
574+00	8” Steel	
616+72	24” Steel	
638+07	8” Steel	
657+00	8” Steel	
678+00	8” Steel	
735+57	36” Steel	
736+00	54 “ CMP	
585+32	8” Steel	

Riprap Revetments

See paragraph 4-05 of Standard Manual

Record Keeping

A permanent record should be maintained of all levee inspection and maintenance activities. Records should include dated inspection reports (in checklist form), conditions observed including a description of the specific locations, and maintenance actions taken.

DRAFT

SECTION 10.2 MAINTENANCE, INSPECTION, AND VEGETATION MONITORING PLAN OF FLOODPLAIN ADJACENT TO UNIT NO. 144 LEVEE SYSTEM

10.2.1 Background of Valley Elderberry Longhorn Beetle (VELB) Mitigation and Habitat Enhancement Plans at Star Bend and Adjoining O'Conner Lakes

Consistent with the Habitat Enhancement Plan (HEP) for the Setback Levee at Star Bend, dated March 6, 2009 (Appendix F) and the USFWS Biological Opinion dated February 6, 2009, LD1 as the LMA, is committed to preserving at maintaining least 20.0 acres of VELB habitat to ensure that the compensatory habitat mitigation and enhancements are sustained in perpetuity while maintaining the integrity of the flood control and flood conveyance system. Figure 5 shows the limits of the Star Bend Setback Levee and the enlarged floodplain inclusive of the associated mitigation and habitat enhancement boundaries in relation to the CDFG O'Conner Lakes Unit Riparian Restoration Plan Area of approximately 228 acres. The O'Conner Lakes restoration area is located within the larger O'Conner Lakes Wildlife Unit that encompasses approximately 471 acres (Figure 6).

In addition to the 20.65 acres of VELB mitigation and habitat enhancements in the enlarged floodplain at Star Bend there is still another 28.5 acres (Figure 4) that is available to LD1 and its

local flood control partners within the Sutter Butte Flood Control Agency (SBFCA). The regional flood control improvements contemplated by SBFCA in connection with securing at least a 100-yr level of flood protection for the Yuba City Basin, inclusive of areas south of Yuba City along the west Levee of the Feather River - Unit No. 144, will likely require environmental mitigation and enhancement opportunities within the remaining 28.5 acres.

10.2.2 Consistency of Vegetation Maintenance Plan with CVFPB Requirements, the Lower Feather River Corridor Management Plan, and the Star Bend Habitat Enhancement Plan

DRAFT

The vegetation maintenance and monitoring plan for the enlarged floodplain at Star Bend is developed herein to be responsive to maintaining the flow conveyance and flood safety attributes of the improved flood control system at Star Bend while collectively meeting the USFWS Biological Opinion mitigation, compensatory, and conservation conditions specifically developed for the Setback Levee at Star Bend. The vegetation maintenance and monitoring is also intended to be responsive and consistent with the Central Valley Flood Protection Board's (CVFPB) desire to have a long-term maintenance plan that ensures flood safety and flood flow conveyance is preserved and maintained in the Lower Feather River while acknowledging the environmental conditions and potential incidental take considerations imposed by the USFWS. The vegetation management plan is also consistent with the short- and long-term goals and objectives of the Lower Feather River Corridor Management Plan (LFRCMP). The LFRCMP is being developed by key stakeholders of the Lower Feather River Corridor, and include, but are not limited to; the USACE, the CVFPB, CDFG, USFWS, DWR, TRLIA, RD 784 and LD1. The LFRCMP is a multi-objective plan that may implement a Habitat Conservation Plan (HCP) and/or an adaptive management plan that will address ongoing flood flow conveyance, vegetation management and environmental enhancements within the Lower Feather River Corridor, inclusive of the 16.65 miles of the West Levee of the Feather River, Unit, No. 144, except the northerly 1.75 miles north of Highway 20, in Yuba City.

The vegetation maintenance and monitoring plan for the floodplain enlarged by approximately 49.5 acres at Star Bend is intended to be implemented for the current 20.65 acres of VELB

mitigation and habitat, as well as for any subsequent additions (up to 28.5 acres) by LD1 or others. It is also intended to set the framework and operational parameters for managing and monitoring the vegetation of the enlarged floodplain that is adjacent to the O'Conner Lakes Wildlife Unit and is included within the Lower Feather River Corridor Management Plan boundaries.

10.2.3 Hydraulic Designs, Baseline Conditions, and Freeboard Operational Parameters for Enlarged Floodplain in Star Bend Project Area (RM 16.50 to RM 18.25)

DRAFT

By incorporating the Star Bend Setback Levee into the West Levee of the Feather River - Unit No. 144 of the Sacramento River Flood Control Project it enlarged the floodplain incrementally by approximately 49.5 acres, and it also incrementally lowered the flood stage elevations along the right bank, Unit No. 144, levees below the USACE 1957 Design Profile by 0.10 to 0.30 feet at and above Star Bend between River Mile (RM) 17.50 and RM 23.25. The improved freeboard conditions incrementally gained by the Setback Levee at Star Bend were also greatly increased by the setback levee on the opposite (left) bank, above Star Bend constructed in 2009 and 2010 by the Three Rivers Levee Improvement Authority (TRLIA). Refer to Table 1 and Figure 7 for the 2010 post-project baseline conditions of the improved freeboard within Unit No. 144 that has been gained relative to the USACE 1957 Design Flow of 300,000 cfs as well as the 100-yr (280,000 cfs) and 200-yr (350,000 cfs) Annual Exceedance Probability (AEP) events. Table 1 shows that approximately 4.1 to 4.9 feet of freeboard exists in the Star Bend Area (RM 16.50 to RM 18.25) for the 200-yr AEP event, and that approximately 7.3 to 8.0 feet of freeboard exists for the 100-yr AEP event. The water surface profiles and freeboard conditions gained by both of the setback levees were calculated with the assumption that the Manning roughness coefficient "n" value for the enlarged and adjoining floodplain at Star Bend and O'Conner Lakes in Sutter County would not exceed 0.07 in the future. The latest baseline freeboard calculations also assumed "n" values in the O'Conner Lakes Wildlife Unit of 0.035 for native grass areas as noted in Figure 8. Given the baseline freeboard conditions with the setback levees in place, LD1 and any of its vegetation management partners and successors should manage the enlarged floodplain at Star Bend and O'Conner Lakes at or below the "n" values shown in Figure 8 to maintain the minimum levels of freeboard as noted in Table 1 and shown in Figure 7. The enlarged

floodplain, inclusive of the Phase 1A, 1B, and 1C planting areas at star Bend containing mostly herbaceous plants and little hardwood plant species can be easily managed to keep "n" values collectively below 0.07. The Feather River Setback Levee and Phase 1 Habitat Enhancement Project at Star Bend 2010 Initial Monitoring Report, inclusive of as-built sheets, dated July 2010 (Included as Appendix G) indicates the density of plants per acre for each component for the Phase 1A, 1B, and 1C Plantings. The plants densities per acre can be utilized as a benchmark for establishing "n" values of less than 0.07 for the Star Bend area as well as other areas adjacent to the Unit No. 144 levee system. However, in the event the "n" values increase above 0.07 within the 20.65-acre VELB Phase 1A and 1B mitigation/conservation area and the 2.46-acre cultural resource (Phase 1C) area, LD1 and or other responsible agencies shall reduce the "n" values by selectively thinning vegetation in the adjoining areas to the north and east of the VELB conservation and restoration area(s) to maintain an average "n" value of 0.07 or less as shown in Figure 8.

The minimum stated 2010 baseline freeboard conditions stated in Table 1 for the Star Bend and adjoining O'Conner Lakes areas should apply and be maintained on the right bank levee between RM 16.50 on the downstream end through RM 18.25 on the upstream end. This stretch of the West Levee of the Feather River - Unit No. 144, corresponds to the levee reach defined with its downstream limit approximately 1,000 feet southerly or downstream from the easterly extension of Tudor Road, and its upstream limit being a distance of approximately 2,000 feet upstream of the easterly extension of Star Bend Road. The minimum 2010 baseline freeboard levels between River Miles 16.50 and 18. 25 as noted in Table 1 shall be maintained by the Superintendent and any of its vegetation management partners and successors, unless otherwise mutually agreed upon by LD1, the CVFPB, and the LFRCMP and/or its collective successors. The water surface profile shall not be allowed to increase above the USACE 1957 design profile. In no event shall the vegetation in the floodplain of the Feather River at or near Star Bend between RM 16.50 and 18.25 be managed to infringe upon less than 7.33 feet of freeboard against the 1-100-yr AEP event and less than 4.13 feet against the 1-200 yr AEP event.

DRAFT

10.2.4 Hydraulic Designs, and Freeboard Operational Parameters for Unit No. 144, Beyond the Star Bend Project Area

For the balance of the floodway outside of the Star Bend Setback Area described above, bounded by the West Levee of the Feather River - Unit No. 144, the vegetation in the Lower Feather Corridor shall be managed in accordance with the CVFPB, USACE, and Local Maintaining Agency (LMA) standards, in which the hydraulic benefits of the setback levees within the LFRC will be taken into consideration.

Consistent with gaining additional freeboard and greater levels of flood protection in the Lower Feather River Corridor above Star Bend with the implementation of the TRLIA setback levee on the left bank of the Feather River (opposite levee of Unit No. 144) and the LD1 Setback Levee at Star Bend, LD1 suggests managing and controlling the vegetation in the river corridor as close as possible to the new baseline conditions for the 100-yr and 200-yr AEP events. The new baseline freeboard conditions as noted in Table 1 and in Figure 7, particularly on the west side of the river channel, indicate there is of 5 to 8 feet of freeboard for large segments of Unit No. 144 for the 200-yr and 100-yr AEP events, respectively, but less for the USACE 1957 Design Profile. SBFCA and LD1 are preparing plans to rehabilitate significant portions of Unit No. 144 above Star Bend to secure 200-yr protection for Yuba City and 100-yr protection for areas south of Yuba City. The rehabilitation designs for most of Unit No. 144 are utilizing the new 2010 baseline freeboard conditions as a basis of design in conjunction with 1957 Design Profile to establish the new Design Water Surface Elevation (DWSE), consistent with the DWR's Interim Levee Design Criteria (ILDC) for urban areas. Thus, until the Unit No. 144 rehabilitation designs are complete and approved by the USACE and the CVFPB, it is prudent to manage the vegetation in the Lower Feather River Corridor along Unit No. 144, and any increases in the Water Surface Elevation (WSE) or vegetation plantings within the LFRC shall be subject to the CVFPB, USACE, and LMA standards for approval. The CVFPB, USACE, and LMAs shall take into consideration the hydraulic benefits gained from the completion of the setback levees within the LFRC while completing their respective technical reviews. The water surface profile shall not be allowed to increase above the USACE 1957 design profile. The suggested vegetation management practices mentioned above relative to minimizing impacts to the current baseline

DRAFT

freeboard conditions are intended to be a hydraulic measuring guide for controlling and maintaining vegetation in the Lower Feather River Corridor by LD1, DWR and others. The LFRCMP will provide opportunities and adaptive management procedures to explore applicable revisions to the suggested limitations on changing the hydraulic profiles as a result of vegetation management practices at Star Bend and other portions of the floodway adjacent to Levee Unit No. 144.

DRAFT

10.2.5 Maintenance and Monitoring Requirements of 20.65-Acre VELB Mitigation and Habitat Enhancement Area and 2.46-Acre Cultural Site

The USFWS Biological Opinion dated February 6, 2009, for the VELB at Star Bend, coupled with the Star Bend Habitat Enhancement Plan (HEP) - Appendix F, requires the LMA/ Superintendent to preserve at least 20.0 acres of VELB habitat. This requirement is to ensure that the compensatory habitat mitigation and enhancements are sustained in perpetuity while maintaining the integrity of the flood control and flood conveyance system. Consistent with the USFWS VELB programmatic conservation guidelines revised July 9, 1999, a condition to ensure the mitigation and habitat enhancements are sustained requires LD1 to monitor and maintain a 60% survivorship of the elderberry transplants and seedlings as well as the associate plants on the 20.65 acres. The initial monitoring report prepared in July of 2010 by Restoration Resources noted that all but 3 of 37 transplanted elderberry shrubs had survived, and that 1377 of 1475 (94%) elderberry seedlings had survived and that 2544 of 2573 (99%) of the associate plants had survived. Annual monitoring and reporting should continue by the LMA/Superintendent over a period of 10 consecutive years through June of 2019 or seven years out of a period of 15 years concluding in 2025, consistent with the USFWS conservation guidelines. Annual monitoring of plant survivorship and population surveys of VELB, consistent with the USFWS conservation guidelines, are also required to take place twice a year during the VELB active season between February 15 and June 30.

To ensure high survivorship LD1 is required to irrigate the VELB when appropriate, and not use insecticides, herbicides, fertilizers or other chemicals within 100 feet of any elderberry plant with

one or more stems measuring 1.0 inch in diameter at ground level. If invasive, non-native plants require selective weeding and/or vegetation of associate plants collectively exceed an "n" value of .07 as shown in Figure 8, the selective plant removal should only take place during the VELB dormancy period of November 1 through February 14. The LMA/Superintendent shall provide seasonal training to all field personnel relative to identifying elderberry shrubs during dormant and non-dormant periods to prior to any vegetation control activities within 100 feet of any elderberry shrubs within the Phase 1A and 1B elderberry planting areas.

The Phase 1C native blackberry and wildrose plantings covering 2.46 acres of a known cultural site are intended to serve as a deterrent to future disturbance of the known site. The density of plantings per acre (as noted in Appendix G – As-Built Sheet 1 of 3) are greater in Phase 1C, than 1A and 1B, but represent a similar "n" value of 0.07 or less with approximately 415 blackberry and 415 wildrose plants per acre.

10.2.6 Vegetation Maintenance Practices Adjacent to 20.65-Acre VELB Mitigation and Habitat Enhancement Area

As noted above, consistent with the USFWS conservation guidelines, use of insecticides, herbicides, fertilizers or other chemicals are prohibited within 100 feet of any elderberry plant greater than one-inch in diameter, and as such, none of the above substances should be applied to the 50-ft. clear area located between the waterward toe of the setback levee and the 20.65 acre VELB mitigation and habitat enhancement area. The noted 50-ft. wide strip waterward of the levee can be seasonally mowed or disked (except during the VELB active season of March 15 through June 15) to keep vegetation to less than one inch in diameter at ground level. Elderberry shrubs of less than one-inch in diameter at ground level in this 50-ft. wide strip can also be removed except during the VELB active season of March 15 through June 15. Elderberry shrubs of less than one-inch in diameter at the ground level on the levee slopes can be removed at any time as they are located a minimum of 90 to 100 ft. away from any elderberry shrubs planted or transplanted within the 20.65 acre mitigation/enhancement site. Mowing or disking in the noted 50 ft.-wide strip waterward of the levee can take place except during the VELB active period of March 15 through June 15. Burning of grasses along both landward and waterside slopes of the

DRAFT

levee and up to 50 ft beyond the landward toe is acceptable during the VELB active period of March 15 through June 15, as all of the transplanted and planted elderberry shrubs are located at least 90 to 100 feet away from the nearest levee slope(s). If vegetation control (mowing or selective removal) is required north or east of the 20.65-acre VELB mitigation and habitat enhancement site, such activity shall not take place during the VELB active period of March 15 through June 15.

DRAFT

10.2.7 Vegetation Management Contracts and Funding Sources

In July of 2010 LD1 entered into a two year contract with Restoration Resources to maintain and monitor the 20.65 acre VELB mitigation and habitat enhancement site consistent with the USFWS conservation and reporting guidelines. LD1 has also contracted with Restoration Resources for maintaining and monitoring the vegetation of blackberries and wildrose on 2.46 acres providing protection to a known cultural site. The two year maintenance and monitoring contract between LD1 and Restoration Resources is in the amount of approximately $60,000, or approximately $30,000 per year. The two-year contract with Restoration Resources, with possible extensions, will be funded by the EIP funds and LD1. Subsequent funding for monitoring and maintenance will also be pursued through other grant programs such as DWR's Flood Corridor Plan. Cost-sharing with SBFCA and DWR will also be pursued in connection with enlarging the current 20.65 acre habitat mitigation and enhancement site by as much as 28.5 acres. It is hoped with the potential enlargement of the existing 20.65-acre site to 49.15 acres adjacent to the O'Conner Lakes 228-acre Riparian Vegetation Plan Area that the enlarged floodplain at Star Bend can be passively managed in the near future with little or no vegetation control or monitoring required. Enlargement of the enhancement area with advanced restoration efforts in consultation with the USFWS may ultimately lead to the elimination or reduction of ongoing maintenance, monitoring, and reporting requirements for the current 20.65-acre VELB mitigation and habitat enhancement site.

SECTION 11 LEVEE SURVEILLANCE

Surveillance of the levee shall be carried out as described in Table 3 included in Section 10.1 of this O&M addendum. Annual readings of the five settlement monuments located along the crown of the setback levee at Star Bend (and noted in Table 2) should be recorded annually until subsidence readings indicate the levee has settled less than 0.1 foot over a twelve month period. The design of the setback levee at Star Bend anticipated a total post-construction settlement of approximately four inches (0.33 feet). Should the settlement exceed this amount, an engineer should be consulted to evaluate the levee height with respect to the design water surface. Settlement monitoring and profiles of the levee unit wherever freeboard (or the Top of Levee) is less than four feet above the USACE 1957 design profile needs to take place at five-year intervals to ensure there are no variations in crown elevation or other irregularities that might threaten the integrity of the levee.

DRAFT

SECTION 12 REPAIR, REPLACEMENT, AND REHABILITATION

The local sponsor LD1, also referred to as the LMA, has entered into a separate Operation, Maintenance, Repair, Replacement, and Rehabilitation (OMRR&R) Agreement with the CVFPB on December 3, 2010. The OMRR&R Agreement covers not only the local sponsor's separable improvements and elements of the Setback Levee at Star Bend (described in Section 5, paragraph s. of this addendum to the O&M manual and as authorized by the Project Cooperation Agreement noted in Section 7 of this O&M Addendum) but also the balance of the levee system of Unit No. 144. Consistent with the noted OMRR&R Agreement this addendum to the O&M manual also addresses the Superintendent's O&M responsibilities for the entire levee system of Unit No.144 of the Sacramento River Flood Control Project.

DRAFT

All required repair, replacement, and/or rehabilitation should be made as recommended in the USACE's "*Standard Operation and Maintenance Manual for the Sacramento River Flood Control Project,*" and to the specifications for the original project construction unless otherwise directed by the CVFPB, or noted in the OMRR&R Agreement between the CVFPB and the local sponsor, LD1.

12.1 Erosion Repair

Areas of significant erosion, as determined by a qualified Engineer, should be over-excavated and filled with compacted backfill. The material properties and compaction requirements for the backfill should be the same as specified for the original project construction. The repaired area should then be stabilized using an erosion mat or fabric, as approved by the engineer, and reseeded to reestablish the ground cover.

12.2 Crack Repair

All cracks in the levee crown or slopes should be repaired using the following procedures: (1) Remove and salvage the gravel surfacing material on the levee crown; (2) excavate the levee

crown and/or slope along the crack to the full depth of the crack; (3) backfill with compacted clayey material placed in thin lifts and meeting the material property and compaction requirements for the original levee construction; (4) replace and compact the gravel surfacing over the levee crown; and (5) stabilize the repaired area on the levee slope using an erosion mat or fabric and reseed it to reestablish the ground cover.

12.3 Slip Repair

All slips in the levee crown or slopes should be repaired using the following procedures: (1) Remove and salvage the gravel surfacing material on the levee crown; (2) excavate and remove the entire slip or crack surface to ensure that the failure plane and all failed materials (since these materials would thereafter only obtain residual strength) are completely removed; (3) backfill with compacted clayey material placed in thin lifts and meeting the material property and compaction requirements for the original levee construction; (4) replace and compact the gravel surfacing over the levee crown and;(5) stabilize the repaired area on the levee slope using an erosion mat or fabric and reseed it to reestablish the ground cover.

DRAFT

SECTION 13 NOTIFICATION OF DISTRESS

Notification of distress should be reported in accordance with ER 1110-2-101, "*Reporting of Evidenced of Distress of Civil Works Structures.*"

DRAFT

SECTION 14 REFERENCES

14.1 USACE Engineer Regulations

ER 1110-2-401 Operation, Maintenance, Repair, Replacement, and Rehabilitation Manual for Projects and Separable Elements Managed by Project Sponsors, September 1994

ER 1110-2-100 Periodic Inspection and Continuing Evaluation of Completed Civil Works Structures, February 1995

ER 1110-2-101 Reporting of Evidenced of Distress of Civil Works Structures, March 1996

ER 1110-2-1942 Inspection, Monitoring and Maintenance of Relief Wells, September 1998

14.2 USACE Engineer Manuals

EM 1110-2-1913 Design and Construction of Levees, April 2000

EM 1110-2-1914 Design, Construction, and Maintenance of Relief Wells, May 1992

14.3 References Specific to Unit No. 144

Supplement to Standard Operation and Maintenance Manual for Unit No. 144, West Levee of Feather River from North Boundary of Levee District No. 1 to North Boundary of Reclamation District No. 823, dated August 1955

Levee District One Flood Safety Plan for Unit No. 144 of Sacramento River Flood Control Project, prepared January 2011 by GEI Consultants, Inc.

14.4 Other References

California Department of Water Resources; "*Proposed Interim Levee Design Criteria for Urban and Urbanizing Area State-Federal Project Levees*," Third Draft, May 15, 2009.

U.S. Army Corps of Engineers, Sacramento District; "*Geotechnical Levee Practice, SOP EDG-03.*"

U.S. Army Corps of Engineers, Sacramento District; "*Standard Operation and Maintenance Manual for the Sacramento River Flood Control Project*," May 1955.

DRAFT

U.S. Army Corps of Engineers, ETL 1110-2-571; "*Guidelines for Landscape Planting and Vegetation Management at Levees, Floodwalls, Embankment Dams, and Appurtenant Structures.*"

U.S. Army Corps of Engineers; "*Levee Owner's Manual for Non-Federal Flood Control Works, The Rehabilitation and Inspection Program, Public Law 84-99,*" March 2006.

DRAFT

DRAFT

DRAFT

TABLE 2

Unit No. 144 Settlement Monument Elevations

At Levee District One Star Bend Setback Levee

SETTLEMENT MONUMENT SURVEYS – JUNE and AUGUST 2010							
Item	**Northing**	**Easting**	**CL Offset, Feet**	***Elev. on 06-16-2010**	***Elev. on 08-16-2010**	**Change in Elev.**	**Description**
MON-1	213036.0572	6674370.821	23.10 left	71.483	71.491	0.008	2 ¼" Brass Disk
MON-2	2129693.859	6674817.647	7.03 left	70.987	70.966	-0.021	2 ¼" Brass Disk
MON-3	2128875.613	6675388.154	6.49 left	70.604	70.591	-0.013	2 ¼" Brass Disk
MON-4	2128048.777	6675966.635	7.56 left	70.120	70.099	-0.021	2 ¼" Brass Disk
MON-5	2127637.950	6676253.483	8.79 left	69.886	69.871	-0.015	2 ¼" Brass Disk

***All Elevations reported in 1929 NGVD**

DRAFT

TABLE 3
Summary of Inspection/Maintenance/Surveillance Requirements
For Unit No. 144, West Levee of Feather River, Sutter County, California

O&M Activity	Requirement and Frequency	Responsibility
Inspections Routine Inspections	• At intervals not exceeding 90 days, immediately prior to the beginning of the flood season, immediately following each major high water period, and at intermediate times as may be necessary to ensure the best possible care of the levee. • Suggested intervals not exceeding 30 days during break-in period between October 2009 and October 2011.	Superintendent
Special Inspections	• After significant natural events such as earthquakes (floods addressed above). • As deemed necessary by operating or engineering personnel.	Superintendent
Maintenance/Surveillance Crown Roadway	• Maintenance as needed to keep crown roadways, ramps, gates, and access roads serviceable.	Superintendent
Rodent Control	• Year-round rodent control program.	Superintendent
Vegetation Management	• As needed.	Superintendent
Erosion Control and Repair	• As needed dragging of the levee slopes. • Inspection during and immediately after high water events. • Monitoring and repairing, as needed.	Superintendent
Seepage Monitoring	• During routine inspections (see schedule above). • During and immediately after high water events.	Superintendent
Crack and Slip Monitoring	• During routine inspections (see schedule above).	Superintendent
Settlement Monument Surveys at Star Bend Setback Levee	• Annual readings until setback levee has settled less than 0.10 foot over twelve month period	Superintendent
Seepage Relief Wells	• Conduct video inspections and performance evaluations of relief wells at 5-year intervals and after high water events	Superintendent

DRAFT

DRAFT

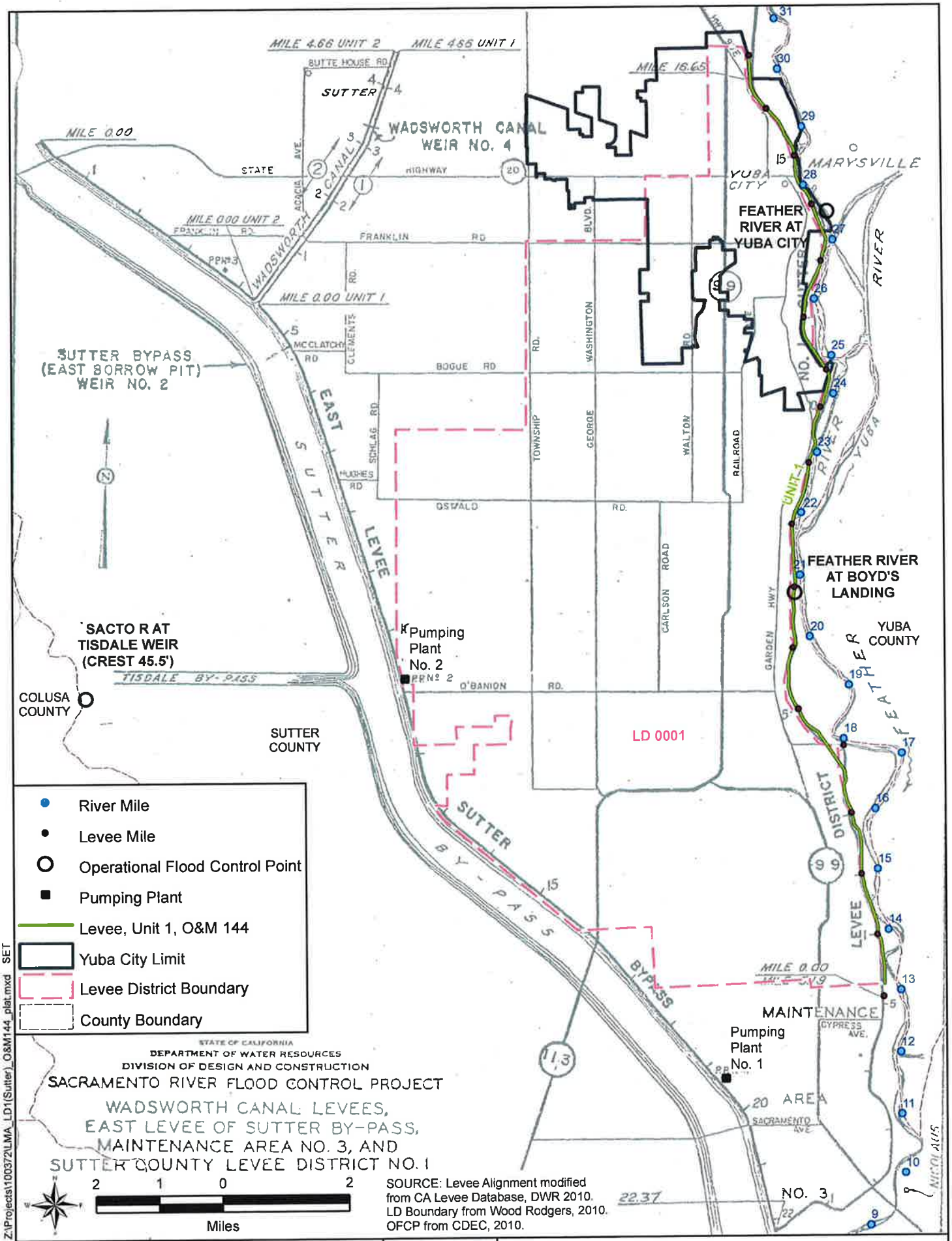

Supplement to Standard O&M Manual

Levee District One of Sutter County

GEI Consultants
Bookman-Edmonston Division

West Levee of Feather River, Unit No. 144 of Sacramento River Flood Control Project

JANUARY 2011 **DRAFT** FIGURE 1

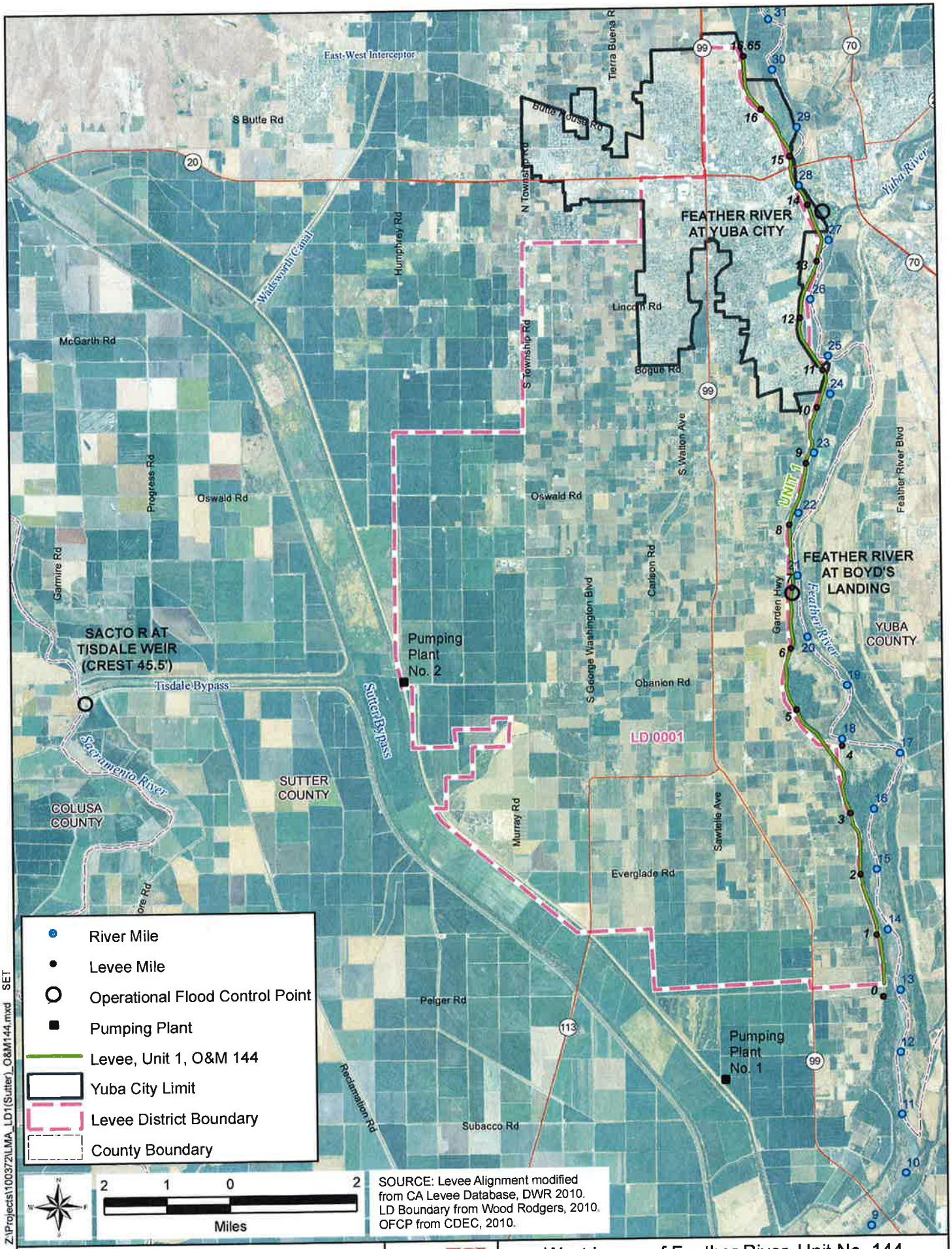

Z:\Projects\100372\LMA_LD1(Sutter)_O&M144.mxd SET

30-Dec-2010

Supplement to Standard O&M Manual

Levee District One of Sutter County

GEI Consultants
Boolman-Edmonston Division

West Levee of Feather River, Unit No. 144 of Sacramento River Flood Control Project

JANUARY 2011 **DRAFT** FIGURE 2

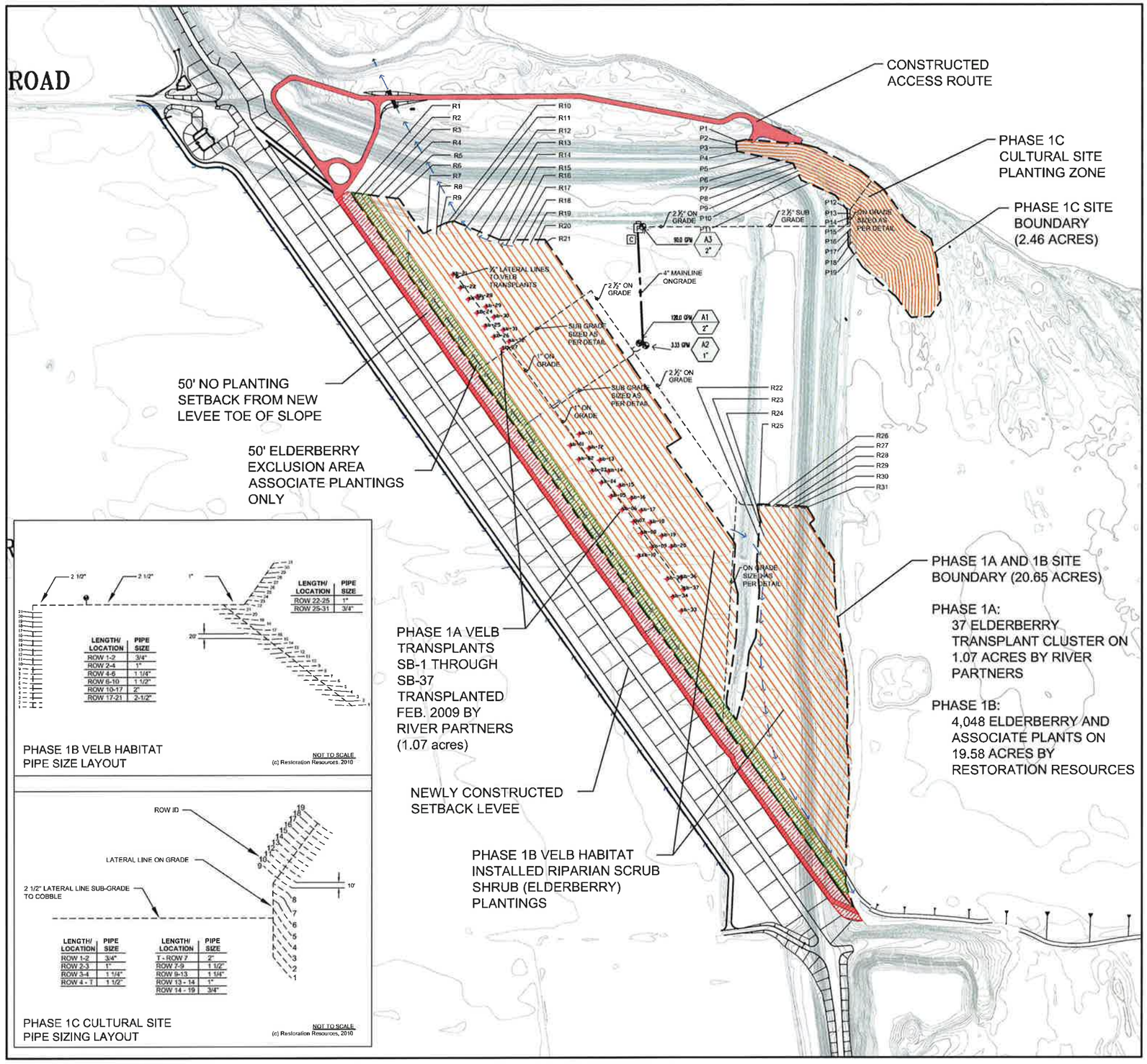

PHASE 1B VELB HABITAT PIPE SIZE LAYOUT

NOT TO SCALE
(c) Restoration Resources, 2010

PHASE 1C CULTURAL SITE PIPE SIZING LAYOUT

NOT TO SCALE
(c) Restoration Resources, 2010

SYMBOLS LEGEND

SYM.	DESCRIPTION	DETAIL
	LIMIT OF WORK (20.65 ACRES) & (2.46 ACRES)	--
	CONTOUR LINES PRIOR TO NEW LEVEE CONSTRUCTION	--
	50' ELDERBERRY EXCLUSION AREA (2 Rows with in this area are planted with associates only)	--
	50' VEGETATION PLANTING EXCLUSION AREA (50' buffer from toe of constructed levee slope)	--
	PREVIOUSLY CONSTRUCTED ACCESS ROUTE	--
	PREVIOUSLY CONSTRUCTED SWALE WATER FLOW DIRECTION	--
	PLANTING ROWS (rows 20' apart, plantings 11' on center running the length of the rows)	--
P	IRRIGATION WELL PUMP LOCATION	--

Phase 1A Riparian Scrub Shrub (Elderberry) Transplanted Clusters			
Common Name	Scientific Name	Installed	Density (plants per acre over 1.07 acres)
blue elderberry	*Sambucus mexicana*	37	34.6

Phase 1B VELB Habitat Installed Riparian Scrub Shrub (Elderberry) Plantings				
Common Name	Scientific Name	Installed	Percent of Total Installed	Density (plants per acre over 19.58 acres)
coyote brush	*Baccharis pilularis*	524	12.9%	26.8
mule fat	*Baccharis salicifolia*	358	8.8%	18.3
buttonbush	*Cephalanthus occidentalis*	222	5.5%	11.3
California rose	*Rosa californica*	791	19.5%	40.4
California blackberry	*Rubus ursinus*	316	7.8%	16.1
sandbar willow	*Salix exigua*	137	3.4%	7.0
Arroyo willow	*Salix lasiolepis*	225	5.6%	11.5
	Associates Total	**2,573**	**63.6%**	**131.4**
blue elderberry	*Sambucus mexicana*	1,475	36.4%	75.3
	Overall Total	**4,048**	**100.0%**	**206.7**

Phase 1C Cultural Site Installed Riparian Scrub Shrub (Blackberry) Plantings				
Common Name	Scientific Name	Installed	Percent of Total Installed	Density (plants per acre over 2.46 acres)
California rose	*Rosa californica*	1,020	50.0%	414.6
California blackberry	*Rubus ursinus*	1,020	50.0%	414.6
	Overall Total	**2,040**	**100.0%**	**829.3**

PLANTING NOTES:

1. Phase 1C Cultural site Plantings are cuttings planted along rows 10-foot apart and installed 5-foot on center.

2. Phase 1B VELB Habitat Installed Woody Plantings are planted along rows 20-foot apart and installed 11-foot on center.

IRRIGATION LEGEND

SYMBOL	DESCRIPTION	MANUFACTURER / MODEL	DETAIL	REMARKS
P	WELL PUMP W/ FILTER	BOLC 2 STAGE COLLOIS PUMP 7.5HP 230 VOLT 3 PHASE MOTOR SHARPLOW 7.5 HP VFD WITH 900 SERIES TORNADO FILTER	-	6" STD LIFT PUMP BY WELL CONTRACTOR
	CONTROL VALVE	RAINBIRD 100 PEB	-	VALVE INSTALLED IN 14" X 19" BOLT DOWN BOX, TYP. LOCATION AS SHOWN
At Intersection of Rows & Lateral Lines	DRIP LINE T	ASSEMBLED IN FIELD	-	VERIFY LOCATION IN FIELD
At end of Rows	DRIP TUBING END CAP	AS APPROVED	-	VERIFY LOCATION IN FIELD
Same as Transplant Locations	TREE RING DRIP EMITTER	ASSEMBLED IN FIELD	-	INSTALL (2GPH) AT EACH ELDERBERRY TRANSPLANT
C	CONTROLLER	HUNTER ACC-1000 CONTROLLER	-	MOUNTED IN LOCKABLE BOX ADJACENT TO ELECTRIC SUB-PANEL
	PVC MAINLINE PIPE (SIZE AS INDICATED)	AS APPROVED	-	4" PVC SCH 40
	PVC LATERAL LINE PIPE	AS APPROVED	-	SIZE SHOWN ON DETAIL - PVC SCH 40, TYP.
Same as Rows	DRIP TUBING	DRIPNET PC HEAVYWALL DRIPPERLINE 0.61 GPH, 16MM	-	EACH SECTION NOT TO EXCEED 415' IN LENGTH CLUSTER OF 3 @ 11' ON CENTER - ELDERBERRY AREA CLUSTER OF 3 @ 5' ON CENTER - CULTURAL SITE

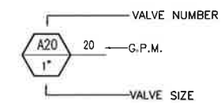

0 75 150 300

PREPARED BY:
RESTORATION RESOURCES
3868 CROWNHATAVENUE
ROCKLIN, CA 95765
PHONE 916.408.2259
FAX 916.408.2299
www.restorationresources.net
CA LIC. #488882

APPENDIX A
SHEET 1 OF 3

CLIENT:
Levee District No. 1
of Sutter Co.
243 Second St.
Yuba City, CA 95991
Phone: (530) 673-2404
Email: lll1@yvjk.com

SHEET TITLE:
STAR BEND PHASE 1 HABITAT ENHANCEMENT
As-Built Records
AS-BUILT PLANTING & IRRIGATION PLAN

NORTH

SCALE 1" = 150'

CHECKED BY: DATE:
ORIGINAL DATE: 7-28-10 DRAWN BY: JOB NUMBER: 2008B
REVISION: DATE: BY:
As-Built Records December 10, 2010 MKL
Not To Scale

SHEET NO. L1.1

1 OF 3

US Army Corps of Engineers®

Flood Damage Reduction Segment / System Inspection Report

Name of Segment / System: _____

Public Sponsor(s): _____

Public Sponsor Representative: _____

Sponsor Phone: _____

Sponsor Email: _____

Corps of Engineers Inspector: _____ Date of Inspection: _____

Inspection Report Prepared By: _____ Date Report Prepared: _____

Internal Technical Review (for Periodic Inspections) By: _____ Date of ITR: _____

Final Approved By: _____ Date Approved: _____

Type of Inspection:	☐ **Initial Eligibility Inspection** ☐ **Continuing Eligibility Inspection (Routine)** ☐ **Continuing Eligibility Inspection (Periodic)**	Overall Segment / System Rating:	☐ **Acceptable** ☐ **Minimally Acceptable** ☐ **Unacceptable**
Contents of Report:	☐ **Instructions** ☐ **Initial Eligibility Inspection** ☐ **General Items for All Flood Control Works** ☐ **Levee Embankment** ☐ **Concrete Floodwalls** ☐ **Sheet Pile and Concrete I-walls** ☐ **Interior Drainage System** ☐ **Pump Stations** ☐ **FDR System Channels**	Note: In addition to the report contents indicated here, a plan view drawing of the system, with stationing, should be included with this report to reference locations of items rated less than acceptable. Photos of general system condition and any noted deficiencies should also be attached.	

US Army Corps
of Engineers®

Flood Damage Reduction Segment / System
Public Sponsor Pre-Inspection Form

The following information is to be provided by the levee district sponsor prior to an inspection. This information will be used to help evaluate the organizational capability of the levee district to manage the levee segment / system maintenance program.

1. Levee segment / system and district: (name of the segment / system and levee district)
2. Reporting period: (month/day/year to month/day/year)
3. Summary of maintenance required by last inspection report:
4. Summary of maintenance performed this reporting period:
5. Summary of maintenance planned next reporting period:
6. Summary of changes to segment / system since last inspection:
7. Problems/ issues requiring the assistance of the US Army Corps of Engineers:

Public Sponsor Pre-Inspection Report

The following information is to be provided by the levee district sponsor prior to an inspection

8. Levee district organization: (elected or appointed levee district officials and key employees)

Name	Position	Mailing Address	Phone Number	Email Address

General Instructions for the Inspection of Flood Damage Reduction Segments / Systems

A. Purpose of USACE Inspections:

The primary purpose of these inspections is to prevent loss of life and catastrophic damages; preserve the value of Federal investments, and to encourage non-Federal sponsors to bear responsibility for their own protection. Inspections should assure that Flood Damage Reduction structures and facilities are continually maintained and operated as necessary to obtain the maximum benefits. Inspections are also conducted to determine eligibility for Rehabilitation Assistance under authority of PL 84-99 for Federal and non-Federal systems. (ER 1130-2-530, ER 500-1-1)

B. Types of Inspections:

The Corps conducts several types of inspections of Flood Damage Reduction systems, as outlined below:

Initial Eligibility Inspections	Continuing Eligibility Inspections	
	Routine Inspections	**Periodic Inspections**
IEIs are conducted to determine whether a non-Federally constructed Flood Damage Reduction system meets the minimum criteria and standards set forth by the Corps for initial inclusion into the Rehabilitation and Inspection Program.	RIs are intended to verify proper maintenance, owner preparedness, and component operation.	PIs are intended to verify proper maintenance and component operation and to evaluate operational adequacy, structural stability, and safety of the system. Periodic Inspections evaluate the system's original design criteria vs. current design criteria to determine potential performance impacts, evaluate the current conditions, and compare the design loads and design analysis used against current design standards. This is to be done to identify components and features for the sponsor that need to be monitored more closely over time or corrected as needed. (Periodic Inspections are used as the basis of risk assessments.)

C. Inspection Boundaries:

Inspections should be conducted so as to rate each Flood Damage Reduction "Segment" of the system. The overall system rating will be the lowest segment rating in the system.

Project	System	Segment
A flood damage reduction project is made up of one or more flood damage reduction systems which were under the same authorization.	A flood damage reduction system is made up of one or more flood damage reduction segments which collectively provide flood damage reduction to a defined area. Failure of one segment within a system constitutes failure of the entire system. Failure of one system does not affect another system.	A flood damage reduction segment is defined as a discrete portion of a flood damage reduction system that is operated and maintained by a single entity. A flood damage reduction segment can be made up of one or more features (levee, floodwall, pump stations, etc).

D. Land Use Definitions:

The following three definitions are intended for use in determining minimum required inspection intervals and initial requirements for inclusion into the Rehabilitation and Inspection Program. Inspections should be considered for all systems that would result in significant environmental or economic impact upon failure regardless of specific land use.

Agricultural	Rural	Urban
Protected population in the range of zero to 5 households per square mile protected.	Protected population in the range of 6 to 20 households per square mile protected.	Greater than 20 households per square mile; major industrial areas with significant infrastructure investment. Some protected urban areas have no permanent population but may be industrial areas with high value infrastructure with no overnight population.

E. Use of the Inspection Report Template:

The report template is intended for use in all Army Corps of Engineers inspections of levee and floodwall systems and flood damage reduction channels. The section of the template labeled "Initial Eligibility" only needs to be completed during Initial Eligibility Inspections of Non-Federally constructed Flood Damage Reduction Systems. The section labeled "General Items" needs to be completed with every inspection, along with all other sections that correspond to features in the system. The section labeled "Public Sponsor Pre-Inspection Report" is intended for completion before the inspection, if possible.

F. Individual Item / Component Ratings:

Assessment of individual components rated during the inspection should be based on the criteria provided in the inspection report template, though inspectors may incorporate additional items into the report based on the characteristics of the system. The assessment of individual components should be based on the following definitions.

Acceptable Item	Minimally Acceptable Item	Unacceptable Item
The inspected item is in satisfactory condition, with no deficiencies, and will function as intended during the next flood event.	The inspected item has one or more minor deficiencies that need to be corrected. The minor deficiency or deficiencies will not seriously impair the functioning of the item as intended during the next flood event.	The inspected item has one or more serious deficiencies that need to be corrected. The serious deficiency or deficiencies will seriously impair the functioning of the item as intended during the next flood event.

G. Overall Segment / System Ratings:

Determination of the overall system rating is based on the definitions below. Note that an Unacceptable System Rating may be either based on an engineering determination that concluded that noted deficiencies would prevent the system from functioning as intended during the next flood event, or based on the sponsor's demonstrated lack of commitment or inability to correct serious deficiencies in a timely manner.

Acceptable System	Minimally Acceptable System	Unacceptable System
All items or components are rated as Acceptable.	One or more items are rated as Minimally Acceptable or one or more items are rated as Unacceptable and an engineering determination concludes that the Unacceptable items would not prevent the segment / system from performing as intended during the next flood event.	One or more items are rated as Unacceptable and would prevent the segment / system from performing as intended, or a serious deficiency noted in past inspections (which had previously resulted in a minimally acceptable system rating) has not been corrected within the established timeframe, not to exceed two years.

H. Eligibility for PL84-99 Rehabilitation Assistance:

Inspected systems that are not operated and maintained by the Federal government may be Active in the Corps' Rehabilitation and Inspection Program (RIP) and eligible for rehabilitation assistance from the Corps as defined below:

If the Overall System Rating is Acceptable	If the Overall System Rating is Minimally Acceptable	If the Overall System Rating is Unacceptable
The system is active in the RIP and eligible for PL84-99 rehabilitation assistance.	The system is Active in the RIP during the time that it takes to make needed corrections. Active systems are eligible for rehabilitation assistance. However, if the sponsor does not present USACE with proof that serious deficiencies (which had previously resulted in a minimally acceptable system rating) were corrected within the established timeframe, then the system will become Inactive in the RIP.	The system is Inactive in the RIP, and the status will remain Inactive until the sponsor presents USACE with proof that all items rated Unacceptable have been corrected. Inactive systems are ineligible for rehabilitation assistance.

I. Reporting:

After the inspection, the Corps is responsible for assembling an inspection report (or a summary report if it was a Periodic Inspection) including the following information:

a. All sections of the report template used during the inspection, including the cover and pre-inspection materials. (Supplemental data collected, and any sections of the template that weren't used during the inspection do not need to be included with the report.)

b. Photos of the general system condition and noted deficiencies.

c. A plan view drawing of the system, with stationing, to reference locations of items rated less than acceptable.

d. The relative importance of the identified maintenance issues should be specified in the transmittal letter.

e. If the Overall System Rating is Minimally Acceptable, the report needs to establish a timeframe for correction of serious deficiencies noted (not to exceed two years) and indicate that if these items are not corrected within the required timeframe, the system will be rated as Unacceptable and made Inactive in the Rehabilitation Inspection Program.

J. Notification:

Reports are to be disseminated as follows within 30 days of the inspection date.

If the Overall System Rating is Acceptable	If the Overall System Rating is Minimally Acceptable	If the Overall System Rating is Unacceptable
Reports need to be provided to the local sponsor and the county emergency management agency.	Reports need to be provided to the local sponsor, state emergency management agency, county emergency management agency, and to the FEMA region.	Reports need to be provided to the local sponsor, state emergency management agency, county emergency management agency, FEMA region, and to the Congressional delegation within 30 days of the inspection.

Initial Eligibility

For use only during Initial Eligibility Inspections of Non-Federally Constructed Flood Damage Reduction Segments / Systems

Rated Item	Rating	Rating Guidelines		Location/Remarks/Recommendations
1. Public Sponsor (A or U only)		**A**	The Public Sponsor is a legally constituted public body with full authority and capability to perform the terms of its agreement as the non-Federal partner of the Corps for a segment / system, able to pay damages, if necessary, in the event of its failure to perform. The public sponsor may be a State, County, City, Town, Federally recognized Indian Tribe or tribal organization, Alaska Native Corporation, or any political subpart of a State or group of states that has the legal and financial authority and capability to provide the necessary cash contributions and the lands, easements, rights-of-way, relocations, borrow, and dredged or excavated materials disposal areas (LERRD's) necessary for the segment / system, and who could legally hold and save the Federal government free from damages that could potentially arise during post-flood rehabilitations or other work on the segment / system.	
		U	The segment / system does not have a public sponsor as defined above.	
2. Flood Protection (A or U only)		**A**	The principal function of the segment / system is to protect people or property from floods.	
		U	The segment / system was built or is primarily used for channel alignment, navigation, recreation, fish and wildlife, land reclamation, drainage, to protect against land erosion or tidal inflows, or for some other non-flood related purpose.	
3. Segment / System Completion (A or U only)		**A**	Segment / System construction is fully completed.	
		U	The segment / system is still under construction.	
4. Construction Compliance (A or U only)		**A**	Appropriate local, State, tribal, and/or Federal permits (right-of-way, easements, regulatory permits, etc.), or waivers thereof, have been obtained for FDR segment / system construction and subsequent modifications. The segment / system was constructed in accordance with all applicable Federal, state and local codes, ordinances, and applicable laws.	
		U	The appropriate permits (or waivers thereof) have not been obtained for the segment / system, or the segment / system was not constructed in accordance with applicable codes, ordinances, and laws.	
5. Primary Levee		**A**	In the case of a levee segment / system, the levee is a primary levee or is a secondary levee which is designed to protect human life.	
		U	The levee is a secondary levee and was not designed to protect human life.	
		N/A	The FDR segment / system is not a levee segment / system.	

Key: A = Acceptable. M = Minimally Acceptable; Maintenance is required. U = Unacceptable. N/A = Not Applicable. FDR = Flood Damage Reduction

Initial Eligibility

For use only during Initial Eligibility Inspections of Non-Federally Constructed Flood Damage Reduction Segments / Systems

Rated Item	Rating	Rating Guidelines		Location/Remarks/Recommendations
6. Minimum Elevation[1] (A or U only)		**A**	• **Urban Levees and Floodwalls**- Minimum elevation corresponding to a flood level with 10% probability of occurring in a given year (10-year flood). • **Agricultural Levees and Floodwalls**- Minimum elevation corresponding to a flood level with 20% probability of occurring in a given year (5-year flood). • **Flood Damage Reduction Channels**- Minimum capacity is for a flood with a 10% probability of occurring in a given year (10-year flood). Improved channels must additionally provide drainage for at least 1.5 square miles of land and have a capacity of at least 800 cfs. (Interior drainage channels within the protected area of a levee segment / system are not considered to be flood damage reduction channels under the RIP.)	
		U	The FDR segment / system does not meet requirements for minimum elevation, capacity, or drainage area.	
7. Physical Location and Cross Section (A or U only)		**A**	The physical location, cross section, and other design elements of the FDR system are sufficient to provide reliable flood protection. The FDR segment / system forms a properly closed segment / system. See Table 5-4, EP 500-1-1.	
		U	The FDR segment / system was not constructed in an appropriate location, does not have an appropriate cross section, is not a properly closed segment / system, or has other shortcomings with design elements necessary for providing reliable flood damage reduction.	
8. Embankment Fill Material[2]		**A**	Embankment fill material is uniform and adequately compacted throughout the entire FDR segment / system, and the type of embankment material is suitable to prevent slides and seepage problems.	
		U	Embankment fill material is not uniform, or there is no compaction and evidence indicates a need for compaction, or the type of embankment material is unsuitable and is likely to contribute to the development of slides or seepage problems.	
9. Foundations[2]		**A**	Foundation material and construction methods adequately address piping, sand boils, seepage, or settlements that would reduce the level of protection.	
		U	Foundation material and construction methods are such that excessive uncontrolled seepage, sand boils, and piping will occur. Performance history indicates significant uncontrolled seepage, sand boils or piping.	
10. Erosion Control		**A**	Erosion protection is capable of handling the designed flow velocity for the level of protection for the entire FDR segment / system. The FDR segment / system is protected against bank caving and slides in all necessary areas, and has adequate drainage to protect FDR segment / system slopes from runoff erosion.	
		U	Erosion protection is not present and there is evidence indicating a need for erosion protection.	

Key: A = Acceptable. M = Minimally Acceptable; Maintenance is required. U = Unacceptable. N/A = Not Applicable. FDR = Flood Damage Reduction

Initial Eligibility

For use only during Initial Eligibility Inspections of Non-Federally Constructed Flood Damage Reduction Segments / Systems

Rated Item	Rating	Rating Guidelines		Location/Remarks/Recommendations
11. Interior Drainage System[3] (including culverts, gates, pump stations)		**A**	Given the level of protection provided by the FDR system, interior drainage structures are appropriately sized, situated, and constructed to move anticipated runoff and seepage out of the protected area. Pump stations will not become inundated during regular operation and their power system is adequately designed and reliable.	
		U	Interior drainage structures are undersized, poorly constructed, poorly situated, or unreliably designed.	
		N/A	The issue of interior drainage does not apply to this type of FDR segment / system.	
12. Structures[3]		**A**	Structures are designed and constructed to withstand anticipated loadings.	
		U	Structures are unreliably designed or inadequately constructed.	

[1] Depending on available data and local Corps policy, the minimum elevation required may be calculated using traditional methods, with the addition of 1 foot of freeboard in agricultural areas and 2 feet of freeboard in urban areas, or using annual exceedance probability, which numerically accounts for the natural variation and uncertainty when estimating discharge-probability and stage-discharge functions so that additional requirements for elevation are based on the level of uncertainty in the data.
[2] This item should be evaluated based on a review of performance history. If this is not available, some form of engineering assessment is required.
[3] Documentation (plans, at a minimum) required for any necessary engineering evaluation is to be provided by the public sponsor.

Key: A = Acceptable. M = Minimally Acceptable; Maintenance is required. U = Unacceptable. N/A = Not Applicable. FDR = Flood Damage Reduction

General Items for All Flood Damage Reduction Segments / Systems

For use during all inspections of all Flood Damage Reduction Segments / Systems

Rated Item	Rating	Rating Guidelines		Location/Remarks/Recommendations
1. Operations and Maintenance Manuals		**A**	Levee Owner's Manual, O&M Manuals, and/or manufacturer's operating instructions are present.	
		M	Sponsor manuals are lost or missing or out of date; however, sponsor will obtain manuals prior to next scheduled inspection.	
		U	Sponsor has not obtained lost or missing manuals identified during previous inspection.	
2. Emergency Supplies and Equipment (A or M only)		**A**	The sponsor maintains a stockpile of sandbags, shovels, and other flood fight supplies which will adequately supply all needs for the initial days of a flood fight. Sponsor determines required quantity of supplies after consulting with inspector.	
		M	The sponsor does not maintain an adequate supply of flood fighting materials as part of their preparedness activities.	
3. Flood Preparedness and Training (A or M only)		**A**	Sponsor has a written system-specific flood response plan and a solid understanding of how to operate, maintain, and staff the FDR system during a flood. Sponsor maintains a list of emergency contact information for appropriate personnel and other emergency response agencies.	
		M	The sponsor maintains a good working knowledge of flood response activities, but documentation of system-specific emergency procedures and emergency contact personnel is insufficient or out of date.	

Key: A = Acceptable. M = Minimally Acceptable; Maintenance is required. U = Unacceptable. N/A = Not Applicable. FDR = Flood Damage Reduction

Levee Embankments

For use during Initial and Continuing Eligibility Inspections of levee segments / systems

Rated Item	Rating	Rating Guidelines		Location/Remarks/Recommendations
1. Unwanted Vegetation Growth[1]		**A**	The levee has little or no unwanted vegetation (trees, bush, or undesirable weeds), except for vegetation that is properly contained and/or situated on overbuilt sections, such that the mandatory 3-foot root-free zone is preserved around the levee profile. The levee has been recently mowed. The vegetation-free zone extends 15 feet from both the landside and riverside toes of the levee to the centerline of the tree. If the levee access easement doesn't extend to the described limits, then the vegetation-free zone must be maintained to the easement limits. Reference EM 1110-2-301 or Corps policy for regional vegetation variance.	
		M	Minimal vegetation growth (brush, weeds, or trees 2 inches in diameter or smaller) is present within the zones described above. This vegetation must be removed but does not currently threaten the operation or integrity of the levee.	
		U	Significant vegetation growth (brush, weeds, or any trees greater than 2 inches in diameter) is present within the zones described above and must to be removed to reestablish or ascertain levee integrity.	
2. Sod Cover		**A**	There is good coverage of sod over the levee.	
		M	Approximately 25% of the sod cover is missing or damaged over a significant portion or over significant portions of the levee embankment. This may be the result of over-grazing or feeding on the levee, unauthorized vehicular traffic, chemical or insect problems, or burning during inappropriate seasons.	
		U	Over 50% of the sod cover is missing or damaged over a significant portion or portions of the levee embankment.	
		N/A	Surface protection is provided by other means.	
3. Encroachments		**A**	No trash, debris, unauthorized farming activity, structures, excavations, or other obstructions present within the easement area. Encroachments have been previously reviewed by the Corps, and it was determined that they do not diminish proper functioning of the levee.	
		M	Trash, debris, unauthorized farming activity, structures, excavations, or other obstructions present, or inappropriate activities noted that should be corrected but will not inhibit operations and maintenance or emergency operations. Encroachments have not been reviewed by the Corps.	
		U	Unauthorized encroachments or inappropriate activities noted are likely to inhibit operations and maintenance, emergency operations, or negatively impact the integrity of the levee.	
4. Closure Structures (Stop Log, Earthen Closures, Gates, or Sandbag		**A**	Closure structure in good repair. Placing equipment, stoplogs, and other materials are readily available at all times. Components are clearly marked and installation instructions/ procedures readily available. Trial erections have been accomplished in accordance with the O&M Manual.	

Key: A = Acceptable. M = Minimally Acceptable; Maintenance is required. U = Unacceptable. N/A = Not Applicable. FDR = Flood Damage Reduction

Levee Embankments

For use during Initial and Continuing Eligibility Inspections of levee segments / systems

Rated Item	Rating	Rating Guidelines		Location/Remarks/Recommendations
Closures) (A or U only)		**U**	Any of the following issues is cause for this rating: Closure structure in poor condition. Parts missing or corroded. Placing equipment may not be available within the anticipated warning time. The storage vaults cannot be opened during the time of inspection. Components of closure are not clearly marked and installation instructions/ procedures are not readily available. Trial erections have not been accomplished in accordance with the O&M Manual.	
		N/A	There are no closure structures along this component of the FDR segment / system.	
5. Slope Stability		**A**	No slides, sloughs, tension cracking, slope depressions, or bulges are present.	
		M	Minor slope stability problems that do not pose an immediate threat to the levee embankment.	
		U	Major slope stability problems (ex. deep seated sliding) identified that must be repaired to reestablish the integrity of the levee embankment.	
6. Erosion/ Bank Caving		**A**	No erosion or bank caving is observed on the landward or riverward sides of the levee that might endanger its stability.	
		M	There are areas where minor erosion is occurring or has occurred on or near the levee embankment, but levee integrity is not threatened.	
		U	Erosion or caving is occurring or has occurred that threatens the stability and integrity of the levee. The erosion or caving has progressed into the levee section or into the extended footprint of the levee foundation and has compromised the levee foundation stability.	
7. Settlement[2]		**A**	No observed depressions in crown. Records exist and indicate no unexplained historical changes.	
		M	Minor irregularities that do not threaten integrity of levee. Records are incomplete or inclusive.	
		U	Obvious variations in elevation over significant reaches. No records exist or records indicate that design elevation is compromised.	
8. Depressions/ Rutting		**A**	There are scattered, shallow ruts, pot holes, or other depressions on the levee that are unrelated to levee settlement. The levee crown, embankments, and access road crowns are well established and drain properly without any ponded water.	
		M	There are some infrequent minor depressions less than 6 inches deep in the levee crown, embankment, or access roads that will pond water.	
		U	There are depressions greater than 6 inches deep that will pond water.	
9. Cracking		**A**	Minor longitudinal, transverse, or desiccation cracks with no vertical movement along the crack. No cracks extend continuously through the levee crest.	
		M	Longitudinal and/or transverse cracks up to 6 inches in depth with no vertical movement along the crack. No cracks extend continuously through the levee crest. Longitudinal cracks are no longer than the height of the levee.	

Key: A = Acceptable. M = Minimally Acceptable; Maintenance is required. U = Unacceptable. N/A = Not Applicable. FDR = Flood Damage Reduction

Levee Embankments

For use during Initial and Continuing Eligibility Inspections of levee segments / systems

Rated Item	Rating	Rating Guidelines		Location/Remarks/Recommendations
		U	Cracks exceed 6 inches in depth. Longitudinal cracks are longer than the height of the levee and/or exhibit vertical movement along the crack. Transverse cracks extend through the entire levee width.	
10. Animal Control		**A**	Continuous animal burrow control program in place that includes the elimination of active burrowing and the filling in of existing burrows.	
		M	The existing animal burrow control program needs to be improved. Several burrows are present which may lead to seepage or slope stability problems, and they require immediate attention.	
		U	Animal burrow control program is not effective or is nonexistent. Significant maintenance is required to fill existing burrows, and the levee will not provide reliable flood protection until this maintenance is complete.	
11. Culverts/ Discharge Pipes[3] (This item includes both concrete and corrugated metal pipes.)		**A**	There are no breaks, holes, cracks in the discharge pipes/ culverts that would result in significant water leakage. The pipe shape is still essentially circular. All joints appear to be closed and the soil tight. Corrugated metal pipes, if present, are in good condition with 100% of the original coating still in place (either asphalt or galvanizing) or have been relined with appropriate material, which is still in good condition. Condition of pipes has been verified using television camera video taping or visual inspection methods within the past five years, and the report for every pipe is available for review by the inspector.	
		M	There are a small number of corrosion pinholes or cracks that could leak water and need to be repaired, but the entire length of pipe is still structurally sound and is not in danger of collapsing. Pipe shape may be ovalized in some locations but does not appear to be approaching a curvature reversal. A limited number of joints may have opened and soil loss may be beginning. Any open joints should be repaired prior to the next inspection. Corrugated metal pipes, if present, may be showing corrosion and pinholes but there are no areas with total section loss. Condition of pipes has been verified using television camera video taping or visual inspection methods within the past five years, and the report for every pipe is available for review by the inspector.	
		U	Culvert has deterioration and/or has significant leakage; it is in danger of collapsing or as already begun to collapse. Corrugated metal pipes have suffered 100% section loss in the invert. HOWEVER: Even if pipes appear to be in good condition, as judged by an external visual inspection, an Unacceptable Rating will be assigned if the condition of pipes has not been verified using television camera video taping or visual inspection methods within the past five years, and reports for all pipes are not available for review by the inspector.	
		N/A	There are no discharge pipes/ culverts.	
12. Riprap Revetments &		**A**	No riprap displacement or stone degradation that could pose an immediate threat to the integrity of channel bank. Riprap intact with no woody vegetation present.	

Key: A = Acceptable. M = Minimally Acceptable; Maintenance is required. U = Unacceptable. N/A = Not Applicable. FDR = Flood Damage Reduction

Levee Embankments

For use during Initial and Continuing Eligibility Inspections of levee segments / systems

Rated Item	Rating	Rating Guidelines		Location/Remarks/Recommendations
Bank Protection		**M**	Minor riprap displacement or stone degradation that could pose an immediate threat to the integrity of the channel bank. Unwanted vegetation must be cleared or sprayed with an appropriate herbicide.	
		U	Significant riprap displacement, exposure of bedding, or stone degradation observed. Scour activity is undercutting banks, eroding embankments, or impairing channel flows by causing turbulence or shoaling. Rock protection is hidden by dense brush, trees, or grasses.	
		N/A	There is no riprap protecting this feature of the segment / system, or riprap is discussed in another section.	
13. Revetments other than Riprap		**A**	Existing revetment protection is properly maintained, undamaged, and clearly visible.	
		M	Minor revetment displacement or deterioration that does not pose an immediate threat to the integrity of the levee. Unwanted vegetation must be cleared or sprayed with an appropriate herbicide.	
		U	Significant revetment displacement, deterioration, or exposure of bedding observed. Scour activity is undercutting banks, eroding embankments, or impairing channel flows by causing turbulence or shoaling. Revetment protection is hidden by dense brush and trees.	
		N/A	There are no such revetments protecting this feature of the segment / system.	
14. Underseepage Relief Wells/ Toe Drainage Systems		**A**	Toe drainage systems and pressure relief wells necessary for maintaining FDR segment / system stability during high water functioned properly during the last flood event and no sediment is observed in horizontal system (if applicable). Nothing is observed which would indicate that the drainage systems won't function properly during the next flood, and maintenance records indicate regular cleaning. Wells have been pumped tested within the past 5 years and documentation is provided.	
		M	Toe drainage systems or pressure relief wells are damaged and may become clogged if they are not repaired. Maintenance records are incomplete or indicate irregular cleaning and pump testing.	
		U	Toe drainage systems or pressure relief wells necessary for maintaining FDR segment / system stability during flood events have fallen into disrepair or have become clogged. No maintenance records. No documentation of the required pump testing.	
		N/A	There are no relief wells/ toe drainage systems along this component of the FDR segment / system.	
15. Seepage		**A**	No evidence or history of unrepaired seepage, saturated areas, or boils.	
		M	Evidence or history of minor unrepaired seepage or small saturated areas at or beyond the landside toe but not on the landward slope of levee. No evidence of soil transport.	
		U	Evidence or history of active seepage, extensive saturated areas, or boils.	

Key: A = Acceptable. M = Minimally Acceptable; Maintenance is required. U = Unacceptable. N/A = Not Applicable. FDR = Flood Damage Reduction

Levee Embankments

For use during Initial and Continuing Eligibility Inspections of levee segments / systems

[1] If there is significant growth on the levee that inhibits the inspection of animal burrows or other items, the inspection should be ended until this item is corrected.
[2] Detailed survey elevations are normally required during Periodic Inspections, and whenever there are obvious visual settlements.
[3] The decision on whether or not USACE inspectors should enter a pipe to perform a detailed inspection must be made at the USACE District level. This decision should be made in conjunction with the District Safety Office, as pipes may be considered confined spaces. This decision should consider the age of the pipe, the diameter of the pipe, the apparent condition of the pipe, and the length of the pipe. If a pipe is entered for the purposes of inspection, the inspector should record observations with a video camera in order that the condition of the entire pipe, including all joints, can later be assessed. Additionally, the video record provides a baseline to which future inspections can be compared.

Key: A = Acceptable. M = Minimally Acceptable; Maintenance is required. U = Unacceptable. N/A = Not Applicable. FDR = Flood Damage Reduction

Floodwalls

For use during Initial and Continuing Eligibility Inspections of all floodwalls

Rated Item	Rating	Rating Guidelines		Location/Remarks/Recommendations
1. Unwanted Vegetation Growth[1]		**A**	A grass-only or paved zone is maintained on both sides of the floodwall, free of all trees, brush, and undesirable weeds. The vegetation-free zone extends 15 feet from both the land and riverside of the floodwall, at ground-level, to the centerline of the tree. Additionally, an 8-foot root-free zone is maintained around the entire structure, including the floodwall toe, heel, and any toe-drains. If the floodwall access easement doesn't extend to the described limits, then the vegetation-free zone must be maintained to the easement limits. Reference EM 1110-2-301 and/or Corps policy for regional vegetation variance.	
		M	Minimal vegetation growth (brush, weeds, or trees 2 inches in diameter or smaller) is present within the zones described above. This vegetation must be removed but does not currently threaten the operation or integrity of the floodwall.	
		U	Significant vegetation growth (brush, weeds, or any trees greater than 2 inches in diameter) is present within the zones described above. This vegetation threatens the operation or integrity of the floodwall and must be removed.	
2. Encroachments		**A**	No trash, debris, unauthorized structures, excavations, or other obstructions present within the easement area. Encroachments have been previously reviewed by the Corps, and it was determined that they do not diminish proper functioning of the floodwall.	
		M	Trash, debris, unauthorized structures, excavations, or other obstructions present, or inappropriate activities noted that should be corrected but will not inhibit operations and maintenance or emergency operations. Encroachments have not been reviewed by the Corps.	
		U	Unauthorized encroachments or inappropriate activities noted are likely to inhibit operations and maintenance, emergency operations, or negatively impact the integrity of the floodwall.	
3. Closure Structures (Stop Log Closures and Gates) (A or U only)		**A**	Closure structure in good repair. Placing equipment, stoplogs, and other materials are readily available at all times. Components are clearly marked and installation instructions/ procedures readily available. Trial erections have been accomplished in accordance with the O&M Manual.	
		U	Any of the following issues is cause for this rating: Closure structure in poor condition. Parts missing or corroded. Placing equipment may not be available within the anticipated warning time. The storage vaults cannot be opened during the time of inspection. Components of closure are not clearly marked and installation instructions/ procedures are not readily available. Trial erections have not been accomplished in accordance with the O&M Manual.	
		N/A	There are no closure structures along this component of the FDR segment / system.	
4. Concrete Surfaces		**A**	Negligible spalling, scaling or cracking. If the concrete surface is weathered or holds moisture, it is still satisfactory but should be seal coated to prevent freeze/ thaw damage.	
		M	Spalling, scaling, and open cracking present, but the immediate integrity or performance of the structure is not threatened. Reinforcing steel may be exposed. Repairs/ sealing is necessary to prevent additional damage during periods of thawing and freezing.	

Key: A = Acceptable. M = Minimally Acceptable; Maintenance is required. U = Unacceptable. N/A = Not Applicable. FDR = Flood Damage Reduction

Floodwalls

For use during Initial and Continuing Eligibility Inspections of all floodwalls

Rated Item	Rating	Rating Guidelines		Location/Remarks/Recommendations
		U	Surface deterioration or deep cracks present that may result in an unreliable structure. Any surface deterioration that exposes the sheet piling or lies adjacent to monolith joints may indicate underlying reinforcement corrosion and is unacceptable.	
5. Tilting, Sliding or Settlement of Concrete Structures[2]		**A**	There are no significant areas of tilting, sliding, or settlement that would endanger the integrity of the structure.	
		M	There are areas of tilting, sliding, or settlement (either active or inactive) that need to be repaired. The maximum offset, either laterally or vertically, does not exceed 2 inches unless the movement can be shown to be no longer actively occurring. The integrity of the structure is not in danger.	
		U	There are areas of tilting, sliding, or settlement (either active or inactive) that threaten the structure's integrity and performance. Any movement that has resulted in failure of the waterstop (possibly identified by daylight visible through the joint) is unacceptable. Differential movement of greater than 2 inches between any two adjacent monoliths, either laterally or vertically, is unacceptable unless it can be shown that the movement is no longer active. Also, if the floodwall is of I-wall construction, then any visible or measurable tilting of the wall toward the protected side that has created an open horizontal crack on the riverside base of a monolith is unacceptable.	
6. Foundation of Concrete Structures[1]		**A**	No active erosion, scouring, or bank caving that might endanger the structure's stability.	
		M	There are areas where the ground is eroding towards the base of the structure. Efforts need to be taken to slow and repair this erosion, but it is not judged to be close enough to the structure or to be progressing rapidly enough to affect structural stability before the next inspection. For the purposes of inspection, the erosion or scour is not closer to the riverside face of the wall than twice the floodwall's underground base width if the wall is of L-wall or T-wall construction; or if the wall is of sheetpile or I-wall construction, the erosion is not closer than twice the wall's visible height. Additionally, rate of erosion is such that the wall is expected to remain stabile until the next inspection.	
		U	Erosion or bank caving observed that is closer to the wall than the limits described above, or is outside these limits but may lead to structural instabilities before the next inspection. Additionally, if the floodwall is of I-wall or sheetpile construction, the foundation is unacceptable if any turf, soil or pavement material got washed away from the landside of the I-wall as the result of a previous overtopping event.	
7. Monolith Joints		**A**	The joint material is in good condition. The exterior joint sealant is intact and cracking/ desiccation is minimal. Joint filler material and/or waterstop is not visible at any point.	
		M	The joint material has appreciable deterioration to the point where joint filler material and/or waterstop is visible in some locations. This needs to be repaired or replaced to prevent spalling and cracking during freeze/ thaw cycles, and to ensure water tightness of the joint.	

Key: A = Acceptable. M = Minimally Acceptable; Maintenance is required. U = Unacceptable. N/A = Not Applicable. FDR = Flood Damage Reduction

Floodwalls

For use during Initial and Continuing Eligibility Inspections of all floodwalls

Rated Item	Rating	Rating Guidelines		Location/Remarks/Recommendations
		U	The joint material is severely deteriorated or the concrete adjacent to the monolith joints has spalled and cracked, damaging the waterstop; in either case damage has occurred to the point where it is apparent that the joint is no longer watertight and will not provide the intended level of protection during a flood.	
		N/A	There are no monolith joints in the floodwall.	
8. Underseepage Relief Wells/ Toe Drainage Systems		**A**	Toe drainage systems and pressure relief wells necessary for maintaining FDR segment / system stability during high water functioned properly during the last flood event and no sediment is observed in horizontal system (if applicable). Nothing is observed which would indicate that the drainage systems won't function properly during the next flood, and maintenance records indicate regular cleaning. Wells have been pumped tested within the past 5 years and documentation is provided.	
		M	Toe drainage systems or pressure relief wells are damaged and may become clogged if they are not repaired. Maintenance records are incomplete or indicate irregular cleaning and pump testing.	
		U	Toe drainage systems or pressure relief wells necessary for maintaining FDR segment / system stability during flood events have fallen into disrepair or have become clogged. No maintenance records. No documentation of the required pump testing.	
		N/A	There are no relief wells/ toe drainage systems along this component of the FDR segment / system.	
9. Seepage		**A**	No evidence or history of unrepaired seepage, saturated areas, or boils.	
		M	Evidence or history of minor unrepaired seepage or small saturated areas at or beyond the landside toe but not on the landward slope of levee. No evidence of soil transport.	
		U	Evidence or history of active seepage, extensive saturated areas, or boils.	

[1] Inspectors must have as-built drawings available during the inspection so that the lateral distance to the heel and toe of the floodwalls can be determined in the field.
[2] The sponsor should be monitoring any observed movement to verify whether the movement is active or inactive.

Key: A = Acceptable. M = Minimally Acceptable; Maintenance is required. U = Unacceptable. N/A = Not Applicable. FDR = Flood Damage Reduction

Interior Drainage System

For use during Initial and Continuing Eligibility Inspections of interior drainage systems

Rated Item	Rating	Rating Guidelines		Location/Remarks/Recommendations
1. Vegetation and Obstructions		**A**	No obstructions, vegetation, debris, or sediment accumulation noted within interior drainage channels or blocking the culverts, inlets, or discharge areas. Concrete joints and weep holes are free of grass and weeds.	
		M	Obstructions, vegetation, debris, or sediment are minor and have not impaired channel flow capacity or blocked more than 10% of any culvert openings, but should be removed. A limited volume of grass and weeds may be present in concrete channel joints and weep holes.	
		U	Obstructions, vegetation, debris, or sediment have impaired the channel flow capacity or blocked more than 10% of a culvert opening. Sediment and debris removal required to re-establish flow capacity.	
2. Encroachments		**A**	No trash, debris, unauthorized structures, excavations, or other obstructions present within the easement area. Encroachments have been previously reviewed by the Corps, and it was determined that they do not diminish proper functioning of the interior drainage system.	
		M	Trash, debris, unauthorized structures, excavations, or other obstructions present, or inappropriate activities noted that should be corrected but will not inhibit operations and maintenance or emergency operations. Encroachments have not been reviewed by the Corps.	
		U	Unauthorized encroachments or inappropriate activities noted are likely to inhibit operations and maintenance, emergency operations, or negatively impact the integrity of this component of the interior drainage system.	
3. Ponding Areas		**A**	No trash, debris, structures, or other obstructions present within the ponding areas. Sediment deposits do not exceed 10% of capacity.	
		M	Trash, debris, excavations, structures, or other obstructions present, or inappropriate activities that will not inhibit operations and maintenance. Sediment deposits do not exceed 30% of capacity.	
		U	Trash, debris, excavations, structures, or other obstructions, or other encroachments or activities noted that will inhibit operations, maintenance, or emergency work. Sediment deposits exceeds 30% of capacity.	
		N/A	There are no ponding areas associated with the interior drainage system.	
4. Fencing and Gates[1]		**A**	Fencing is in good condition and provides protection against falling or unauthorized access. Gates open and close freely, locks are in place, and there is little corrosion on metal parts.	
		M	Fencing or gates are damaged or corroded but appear to be maintainable. Locks may be missing or damaged.	
		U	Fencing and gates are damaged or corroded to the point that replacement is required, or potentially dangerous features are not secured.	
		N/A	There are no features noted that require safety fencing.	
5. Concrete Surfaces (Such as gate		**A**	Negligible spalling, scaling or cracking. If the concrete surface is weathered or holds moisture, it is still satisfactory but should be seal coated to prevent freeze/ thaw damage.	

Key: A = Acceptable. M = Minimally Acceptable; Maintenance is required. U = Unacceptable. N/A = Not Applicable. FDR = Flood Damage Reduction

Interior Drainage System

For use during Initial and Continuing Eligibility Inspections of interior drainage systems

Rated Item	Rating	Rating Guidelines		Location/Remarks/Recommendations
wells, outfalls, intakes, or culverts)		**M**	Spalling, scaling, and open cracking present, but the immediate integrity or performance of the structure is not threatened. Reinforcing steel may be exposed. Repairs/ sealing is necessary to prevent additional damage during periods of thawing and freezing.	
		U	Surface deterioration or deep cracks present that may result in an unreliable structure. Any surface deterioration that exposes the sheet piling or lies adjacent to monolith joints may indicate underlying reinforcement corrosion and is unacceptable.	
		N/A	There are no concrete items in the interior drainage system.	
6. Tilting, Sliding or Settlement of Concrete and Sheet Pile Structures[2] (Such as gate wells, outfalls, intakes, or culverts)		**A**	There are no significant areas of tilting, sliding, or settlement that would endanger the integrity of the structure.	
		M	There are areas of tilting, sliding, or settlement (either active or inactive) that need to be repaired. The maximum offset, either laterally or vertically, does not exceed 2 inches unless the movement can be shown to be no longer actively occurring. The integrity of the structure is not in danger.	
		U	There are areas of tilting, sliding, or settlement (either active or inactive) that threaten the structure's integrity and performance. Any movement that has resulted in failure of the waterstop (possibly identified by daylight visible through the joint) is unacceptable. Differential movement of greater than 2 inches between any two adjacent monoliths, either laterally or vertically, is unacceptable unless it can be shown that the movement is no longer active. Also, if the floodwall is of I-wall construction, then any visible or measurable tilting of the wall toward the protected side that has created an open horizontal crack on the riverside base of a monolith is unacceptable.	
		N/A	There are no concrete items in the interior drainage system.	
7. Foundation of Concrete Structures[3] (Such as culverts, inlet and discharge structures, or gatewells.)		**A**	No active erosion, scouring, or bank caving that might endanger the structure's stability.	
		M	There are areas where the ground is eroding towards the base of the structure. Efforts need to be taken to slow and repair this erosion, but it is not judged to be close enough to the structure or to be progressing rapidly enough to affect structural stability before the next inspection. The rate of erosion is such that the structure is expected to remain stabile until the next inspection.	
		U	Erosion or bank caving observed that may lead to structural instabilities before the next inspection.	
		N/A	There are no concrete items in the interior drainage system.	
8. Monolith Joints		**A**	The joint material is in good condition. The exterior joint sealant is intact and cracking/ desiccation is minimal. Joint filler material and/or waterstop is not visible at any point.	
		M	The joint material has appreciable deterioration to the point where joint filler material and/or waterstop is visible in some locations. This needs to be repaired or replaced to prevent spalling and cracking during freeze/ thaw cycles, and to ensure water tightness of the joint.	

Key: A = Acceptable. M = Minimally Acceptable; Maintenance is required. U = Unacceptable. N/A = Not Applicable. FDR = Flood Damage Reduction

Interior Drainage System

For use during Initial and Continuing Eligibility Inspections of interior drainage systems

Rated Item	Rating	Rating Guidelines		Location/Remarks/Recommendations
		U	The joint material is severely deteriorated or the concrete adjacent to the monolith joints has spalled and cracked, damaging the waterstop; in either case damage has occurred to the point where it is apparent that the joint is no longer watertight and will not provide the intended level of protection during a flood.	
		N/A	There are no monolith joints in the interior drainage system.	
9. Culverts/ Discharge Pipes[4]		**A**	There are no breaks, holes, cracks in the discharge pipes/ culverts that would result in significant water leakage. The pipe shape is still essentially circular. All joints appear to be closed and the soil tight. Corrugated metal pipes, if present, are in good condition with 100% of the original coating still in place (either asphalt or galvanizing) or have been relined with appropriate material, which is still in good condition. Condition of pipes has been verified using television camera video taping or visual inspection methods within the past five years, and the report for every pipe is available for review by the inspector.	
		M	There are a small number of corrosion pinholes or cracks that could leak water and need to be repaired, but the entire length of pipe is still structurally sound and is not in danger of collapsing. Pipe shape may be ovalized in some locations but does not appear to be approaching a curvature reversal. A limited number of joints may have opened and soil loss may be beginning. Any open joints should be repaired prior to the next inspection. Corrugated metal pipes, if present, may be showing corrosion and pinholes but there are no areas with total section loss. Condition of pipes has been verified using television camera video taping or visual inspection methods within the past five years, and the report for every pipe is available for review by the inspector.	
		U	Culvert has deterioration and/or has significant leakage; it is in danger of collapsing or as already begun to collapse. Corrugated metal pipes have suffered 100% section loss in the invert. HOWEVER: Even if pipes appear to be in good condition, as judged by an external visual inspection, an Unacceptable Rating will be assigned if the condition of pipes has not been verified using television camera video taping or visual inspection methods within the past five years, and reports for all pipes are not available for review by the inspector.	
		N/A	There are no discharge pipes/ culverts.	
10. Sluice / Slide Gates[5]		**A**	Gates open and close freely to a tight seal or minor leakage. Gate operators are in good working condition and are properly maintained. Sill is free of sediment and other obstructions. Gates and lifters have been maintained and are free of corrosion. Documentation provided during the inspection.	
		M	Gates and/or operators have been damaged or have minor corrosion, and open and close with resistance or binding. Leakage quantity is controllable, but maintenance is required. Sill is free of sediment and other obstructions.	
		U	Gates do not open or close and/or operators do not function. Gate, stem, lifter and/or guides may be damaged or have major corrosion.	
		N/A	There are no sluice/ slide gates.	

Key: A = Acceptable. M = Minimally Acceptable; Maintenance is required. U = Unacceptable. N/A = Not Applicable. FDR = Flood Damage Reduction

Interior Drainage System

For use during Initial and Continuing Eligibility Inspections of interior drainage systems

Rated Item	Rating	Rating Guidelines		Location/Remarks/Recommendations
11. Flap Gates/ Flap Valves/ Pinch Valves[1]		**A**	Gates/ valves open and close easily with minimal leakage, have no corrosion damage, and have been exercised and lubricated as required.	
		M	Gates/ valves will not fully open or close because of obstructions that can be easily removed, or have minor corrosion damage that requires maintenance.	
		U	Gates/ valves are missing, have been damaged, or have deteriorated to the point that they need to be replaced.	
		N/A	There are no flap gates.	
12. Trash Racks (non-mechanical)		**A**	Trash racks are fastened in place and properly maintained.	
		M	Trash racks are in place but are unfastened or have bent bars that allow debris to enter into the pipe or pump station, bars are corroded to the point that up to 10% of the sectional area may be lost. Repair or replacement is required.	
		U	Trash racks are missing or damaged to the extent that they are no longer functional and must be replaced. (For example, more than 10% of the sectional area may be lost.)	
		N/A	There are no trash racks, or they are covered in the pump stations section of the report.	
13. Other Metallic Items		**A**	All metal parts are protected from corrosion damage and show no rust, damage, or deterioration that would cause a safety concern.	
		M	Corrosion seen on metallic parts appears to be maintainable.	
		U	Metallic parts are severely corroded and require replacement to prevent failure, equipment damage, or safety issues.	
		N/A	There are no other significant metallic items.	
14. Riprap Revetments of Inlet/ Discharge Areas		**A**	No riprap displacement or stone degradation that could pose an immediate threat to the integrity of channel bank. Riprap intact with no woody vegetation present.	
		M	Minor riprap displacement or stone degradation that could pose an immediate threat to the integrity of the channel bank. Unwanted vegetation must be cleared or sprayed with an appropriate herbicide.	
		U	Significant riprap displacement, exposure of bedding, or stone degradation observed. Scour activity is undercutting banks, eroding embankments, or impairing channel flows by causing turbulence or shoaling. Rock protection is hidden by dense brush, trees, or grasses.	
		N/A	There is no riprap protecting this feature of the segment / system, or riprap is discussed in another section.	
15. Revetments other than Riprap		**A**	No riprap displacement or stone degradation that could pose an immediate threat to the integrity of channel bank. Riprap intact with no woody vegetation present.	

Key: A = Acceptable. M = Minimally Acceptable; Maintenance is required. U = Unacceptable. N/A = Not Applicable. FDR = Flood Damage Reduction

Interior Drainage System

For use during Initial and Continuing Eligibility Inspections of interior drainage systems

Rated Item	Rating	Rating Guidelines		Location/Remarks/Recommendations
		M	Minor riprap displacement or stone degradation that could pose an immediate threat to the integrity of the channel bank. Unwanted vegetation must be cleared or sprayed with an appropriate herbicide.	
		U	Significant riprap displacement, exposure of bedding, or stone degradation observed. Scour activity is undercutting banks, eroding embankments, or impairing channel flows by causing turbulence or shoaling. Rock protection is hidden by dense brush, trees, or grasses.	
		N/A	There are no such revetments protecting this feature of the segment / system.	

[1] Proper operation of this item must be demonstrated during the inspection.
[2] The sponsor should be monitoring any observed movement to verify whether the movement is active or inactive.
[3] Inspectors must have as-built drawings available during the inspection so that the lateral distance to the heel and toe of the floodwalls can be determined in the field.
[4] The decision on whether or not USACE inspectors should enter a pipe to perform a detailed inspection must be made at the USACE District level. This decision should be made in conjunction with the District Safety Office, as pipes may be considered confined spaces. This decision should consider the age of the pipe, the diameter of the pipe, the apparent condition of the pipe, and the length of the pipe. If a pipe is entered for the purposes of inspection, the inspector should record observations with a video camera in order that the condition of the entire pipe, including all joints, can later be assessed. Additionally, the video record provides a baseline to which future inspections can be compared.
[5] Proper operation of the gates (full open and closed) must be demonstrated during the inspection if no documentation is available. Be aware of both manual and electrical operators.

Key: A = Acceptable. M = Minimally Acceptable; Maintenance is required. U = Unacceptable. N/A = Not Applicable. FDR = Flood Damage Reduction

Pump Stations

For use during Initial and Continuing Eligibility Inspections of pump stations

Rated Item	Rating	Rating Guidelines		Location/Remarks/Recommendations
1. Pump Stations Operating, Maintenance, Training, & Inspection Records		**A**	Operation, maintenance and inspection records are present at the pump station and are being used and updated, and personnel have been trained in pump station operations. Names and last training date shown in the record book.	
		M	Operation, maintenance and inspection records are present but not adequately used and updated.	
		U	No operation, maintenance and inspection records are present, or refresher training for personnel has not been conducted.	
2. Pump Station Operations and Maintenance Equipment Manuals		**A**	Operation and Maintenance Equipment Manuals and/or posted operating instructions are present and updated as required, and adequately cover all pertinent pump station features. O&M manuals include points of contact for manufacturers and suppliers of major equipment used in the facility.	
		M	Operation and Maintenance Equipment Manuals and/or posted operating instructions are present and adequately cover all pertinent pump station features. However, they are incomplete and the necessary updates have not been made.	
		U	Operation and Maintenance Equipment Manuals are not available.	
3. Safety Compliance		**A**	Safety compliance inspection reports by applicable local, state, or federal agencies available for review.	
		M	No safety compliance inspection reports are available for review.	
4. Communications (A or M only)		**A**	A telephone, cellular phone, two-way radio, or similar device is available to pump station operator and maintenance personnel.	
		M	A telephone, cellular phone, two-way radio, or similar device is not available to pump station operator and maintenance personnel.	
5. Plant Building		**A**	The building is in good structural condition with no major foundation settlement problems. The roof is not leaking, intake & exhaust louvers are clear of debris, fans are operational, etc.	
		M	There are minor structural defects, minimal foundation settlement, leaks, or other conditions noted that need repair. Defects do not threaten the structural integrity or stability of the building, and will not impact pumping operations.	
		U	The structural integrity or stability of the building is threatened, or there is damage to the building that threatens safety of the operator or impacts pumping operations.	
6. Fencing and Gates[1]		**A**	Fencing is in good condition and provides protection against falling or unauthorized access. Gates open and close freely, locks are in place, and there is little corrosion on metal parts.	
		M	Fencing or gates are damaged or corroded but appear to be maintainable. Locks may be missing or damaged.	
		U	Fencing and gates are damaged or corroded to the point that replacement is required, or potentially dangerous features are not secured.	

Key: A = Acceptable. M = Minimally Acceptable; Maintenance is required. U = Unacceptable. N/A = Not Applicable. FDR = Flood Damage Reduction

Pump Stations

For use during Initial and Continuing Eligibility Inspections of pump stations

Rated Item	Rating	Rating Guidelines		Location/Remarks/Recommendations
		N/A	There are no features noted that require safety fencing.	
7. Pumps[1]		**A**	All pumps are properly maintained and lubricated. Systems are periodically tested and documented for review. No vibration, cavitation noises or unusual sounds are noted when the pump is operated. Bearing temperature sensor records don't indicate any problems.	
		M	Minor deficiencies noted that need to be closely monitored or repaired, such as the presence of slight vibrations, leakage of packing gland, bearing temperature sensors are inoperable or no record is present. However, the pumps are operational and are expected to perform through the next period of usage.	
		U	Major deficiencies identified that may significantly reduce pumping operations. For example, bearing sensor records indicate problems, excessive vibration noted, impellers are badly corroded, or there are eroded or missing blades.	
8. Motors, Engines, Fans, Gear Reducers, Back Stop Devices, etc.		**A**	All items are operational. Preventative maintenance and lubrication is being performed and the system is periodically subjected to performance testing. Instrumentation, alarms, bearing sensors and auto shutdowns are operational.	
		M	Systems have minor deficiencies, but are operational and will function adequately through the next flood. Bearing sensors are not operational.	
		U	One or more of the primary motors or systems is not operational, or noted deficiencies have not been corrected.	
9. Sumps / Wet well		**A**	Clear of debris, sediment, or other obstructions. Procedures are in place to remove debris accumulation during operation.	
		M	Debris, sediment, or other obstructions may be present and must be removed, but the sump/ wet well will function as intended during the next flood. Procedures are in place to remove debris accumulation during operation.	
		U	Large debris or excessive silt present which will hinder or damage pumps during operation, or no procedures established to remove debris accumulation during operation.	
10. Mechanical Operating Trash Rakes[1]		**A**	Drive chain, bearing, gear reducers, and other components are in good operating condition and are being properly maintained.	
		M	The trash rake is in need of maintenance, but is still operational.	
		U	Trash rake not operational or deficiencies will inhibit operations during the next flood event.	
		N/A	There are no mechanical trash rakes.	
11. Non-Mechanical Trash Racks		**A**	Trash racks are fastened in place and properly maintained.	
		M	Trash racks are in place but are unfastened or have bent bars that allow debris to enter into the pipe or pump station, bars are corroded to the point that up to 10% of the sectional area may be lost. Repair or replacement is required.	

Key: A = Acceptable. M = Minimally Acceptable; Maintenance is required. U = Unacceptable. N/A = Not Applicable. FDR = Flood Damage Reduction

Pump Stations

For use during Initial and Continuing Eligibility Inspections of pump stations

Rated Item	Rating	Rating Guidelines		Location/Remarks/Recommendations
		U	Trash racks are missing or damaged to the extent that they are no longer functional and must be replaced. (For example, more than 10% of the sectional area may be lost.)	
		N/A	There are no trash racks, or they are covered in the pump stations section of the report.	
12. Fuel System for Pump Engines		**A**	Fuel system is operational, day tank present and operational, fuel fresh and rotated regularly.	
		M	Fuel system is operational and of adequate capacity, but day tank is missing or fuel is not fresh and rotated regularly.	
		U	Fuel system not functional.	
		N/A	No fuel system.	
13. Power Source		**A**	The normal power source and backup generators, if installed, are operational, properly exercised and well maintained. Surge protection, grounding, lightning protection, transformers, and automatic/manual transfer of main power to backup system is working.	
		M	Normal power source and backup units, if applicable, are operational with minor discrepancies or maintenance, inspection and exercising record is present but not up to date. Preventative maintenance or repairs are required.	
		U	Normal power source or generators are not operational and must be repaired; or generator, if required, is not on site.	
14. Electrical Systems[2]		**A**	Operational and maintained free of damage, corrosion, and debris. Preventative maintenance and system testing is being performed periodically.	
		M	Operational with minor discrepancies. Preventative maintenance or repairs are required, but the components are expected to function adequately during the next flood event.	
		U	Components of the electrical system will not function adequately during the next flood event and must be replaced.	
15. Megger Testing on Pump Motors and Critical Power Cables		**A**	Results of megger tests on pump motors or critical power cables show that the insulation meets manufacturer's or industry standards. Tested within the last year.	
		M	Megger testing not conducted within the past year. If megger tests on pump motors indicate that insulation resistance is below the manufacturer's or industry standard, but the resistance can be corrected with proper application of heat, this is minimally acceptable. (The application of heat does not relate to critical power cables.)	
		U	Megger tests not conducted within past two years, or tests indicate that insulation resistance is low enough that the equipment will not be able to meet design standards of operation; or evidence of arcing or shorting is detected visually.	

Key: A = Acceptable. M = Minimally Acceptable; Maintenance is required. U = Unacceptable. N/A = Not Applicable. FDR = Flood Damage Reduction

Pump Stations

For use during Initial and Continuing Eligibility Inspections of pump stations

Rated Item	Rating	Rating Guidelines		Location/Remarks/Recommendations
16. Enclosures, Panels, Conduit and Ducts		**A**	All enclosures, panels, conduits, and ducts are protected from corrosion damage and show no rust, damage, or deterioration that would cause a safety concern.	
		M	Minor surface corrosion which appears to be maintainable. Cleaning and painting required.	
		U	Severely corroded and must be replaced to prevent failure, equipment damage, or safety issues.	
17. Intake and Discharge Pipelines		**A**	Intake and discharge pipelines have no corrosion and paint is intact, except for minor touch up required. Pipe couplings and anchors have no leakage or corrosion.	
		M	Intake and discharge pipelines have minor corrosion and repair and painting is required. Pipe coupling with anchors have minor leakage, corrosion and require bolts to be tightened.	
		U	Intake and discharge pipelines have major corrosion and replacement is required. Pipe coupling with anchors have major leakage and is heavily corroded and requires replacement.	
18. Sluice/ Slide Gates[3]		**A**	Gates open and close freely to a tight seal or minor leakage. Gate operators are in good working condition and are properly maintained. Sill is free of sediment and other obstructions. Gates and lifters have been maintained and are free of corrosion. Documentation provided during the inspection.	
		M	Gates and/or operators have been damaged or have minor corrosion, and open and close with resistance or binding. Leakage quantity is controllable, but maintenance is required. Sill is free of sediment and other obstructions.	
		U	Gates do not open or close and/or operators do not function. Gate, stem, lifter and/or guides may be damaged or have major corrosion.	
		N/A	There are no sluice/ slide gates.	
19. Flap Gates/ Flap Valves/ Pinch Valves[1]		**A**	Gates/ valves open and close easily with minimal leakage, have no corrosion damage, and have been exercised and lubricated as required.	
		M	Gates/ valves will not fully open or close because of obstructions that can be easily removed, or have minor corrosion damage that requires maintenance.	
		U	Gates/ valves are missing, have been damaged, or have deteriorated to the point that they need to be replaced.	
		N/A	There are no gates on discharge lines from pump station.	
20. Cranes[1]		**A**	Cranes operational and have been inspected and load tested in accordance with applicable standards within the last year. Documentation is on hand.	

Key: A = Acceptable. M = Minimally Acceptable; Maintenance is required. U = Unacceptable. N/A = Not Applicable. FDR = Flood Damage Reduction

Pump Stations

For use during Initial and Continuing Eligibility Inspections of pump stations

Rated Item	Rating	Rating Guidelines		Location/Remarks/Recommendations
		M	Cranes have not been inspected or operationally tested within the past year, or there are visible signs of corrosion, oil leakage, etc, requiring maintenance.	
		U	Cranes are not operational, and this may prevent the pump station from functioning as required. No documentation available on cranes.	
		N/A	There are no cranes.	
21. Other Metallic Items (Equipment, Ladders, Platform Anchors, etc)		**A**	All metal parts are protected from corrosion damage and show no rust, damage, or deterioration that would cause a safety concern.	
		M	Corrosion seen on metallic parts appears to be maintainable.	
		U	Metallic parts are severely corroded and require replacement to prevent failure, equipment damage, or safety issues.	
		N/A	There are no other significant metallic items.	

[1] Proper operation of this item must be demonstrated during the inspection.
[2] Check motor control center, circuit breakers, pilot lights, volt meters, ammeters, sump level indicator, gate position indicators, remote operating systems, including SCADA and telemetry systems. Also, check interior and exterior lighting; especially lighting near trash rack screens, ladders, walkways, etc.
[3] Proper operation of the gates (full open and closed) must be demonstrated during the inspection if no documentation is available. Be aware of both manual and electrical operators.

Key: A = Acceptable. M = Minimally Acceptable; Maintenance is required. U = Unacceptable. N/A = Not Applicable. FDR = Flood Damage Reduction

Flood Damage Reduction Channels

For use during Initial and Continuing Eligibility Inspections of flood damage reduction channels

Rated Item	Rating	Rating Guidelines		Location/Remarks/Recommendations
1. Vegetation and Obstructions		**A**	No obstructions, vegetation, debris, or sediment accumulation within the channel. Concrete channel joints and weep holes are free of grass and weeds.	
		M	Obstructions (including log jams), vegetation, debris, or sediment are minor and have not impaired channel flow capacity, but should be removed. Sediment shoals have not developed to the extent that they can support vegetation other than non-aquatic grasses. A limited volume of grass and weeds may be present in concrete channel joints and weep holes.	
		U	Obstructions (including log jams), vegetation, debris or sediment have impaired the channel flow capacity. Sediment shoals are well established and support woody and/or brushy vegetation. Sediment and debris removal required to re-establish flow capacity.	
2. Shoaling[1] (sediment deposition)		**A**	No shoaling or minor, non-vegetated shoaling is present.	
		M	More widespread vegetated and non-vegetated shoaling is present. Non-aquatic grasses are present on shoal. No trees or brush is present on shoal, and channel flow is not significantly reduced. Sediment and debris removal recommended.	
		U	Shoaling is well established, stabilized by saplings, brush, or other vegetation. Shoals are diverting flow to channel walls. Channel flow capacity is reduced and maintenance is required.	
3. Encroachments		**A**	No trash, debris, unauthorized structures, excavations, or other obstructions present within the easement area. Encroachments have been previously reviewed by the Corps, and it was determined that they do not diminish proper functioning of the channel.	
		M	Trash, debris, unauthorized structures, excavations, or other obstructions present, or inappropriate activities noted that should be corrected but will not inhibit operations and maintenance or emergency operations. Encroachments have not been reviewed by the Corps.	
		U	Unauthorized encroachments or inappropriate activities noted are likely to inhibit operations and maintenance, emergency operations, or negatively impact the integrity of the channel.	
4. Erosion		**A**	No head cutting or horizontal deviation observed.	
		M	Head cutting and horizontal deviation evident, but is less than 1 foot from the designed grade or cross section.	
		U	Head cutting and horizontal deviation of more than 1 foot from the designed grade or cross section. Corrective actions required to stop or slow erosion.	
5. Concrete Surfaces		**A**	Negligible spalling, scaling or cracking. If the concrete surface is weathered or holds moisture, it is still satisfactory but should be seal coated to prevent freeze/ thaw damage.	
		M	Spalling, scaling, and open cracking present, but the immediate integrity or performance of the structure is not threatened. Reinforcing steel may be exposed. Repairs/ sealing is necessary to prevent additional damage during periods of thawing and freezing.	

Key: A = Acceptable. M = Minimally Acceptable; Maintenance is required. U = Unacceptable. N/A = Not Applicable. FDR = Flood Damage Reduction

Flood Damage Reduction Channels

For use during Initial and Continuing Eligibility Inspections of flood damage reduction channels

Rated Item	Rating	Rating Guidelines		Location/Remarks/Recommendations
		U	Surface deterioration or deep cracks present that may result in an unreliable structure. Any surface deterioration that exposes the sheet piling or lies adjacent to monolith joints may indicate underlying reinforcement corrosion and is unacceptable.	
		N/A	There are no concrete items in the channel.	
6. Tilting, Sliding or Settlement of Concrete Structures[2]		**A**	There are no significant areas of tilting, sliding, or settlement that would endanger the integrity of the structure.	
		M	There are areas of tilting, sliding, or settlement (either active or inactive) that need to be repaired. The maximum offset, either laterally or vertically, does not exceed 2 inches unless the movement can be shown to be no longer actively occurring. The integrity of the structure is not in danger.	
		U	There are areas of tilting, sliding, or settlement (either active or inactive) that threaten the structure's integrity and performance. Any movement that has resulted in failure of the waterstop (possibly identified by daylight visible through the joint) is unacceptable. Differential movement of greater than 2 inches between any two adjacent monoliths, either laterally or vertically, is unacceptable unless it can be shown that the movement is no longer active. Also, if the floodwall is of I-wall construction, then any visible or measurable tilting of the wall toward the protected side that has created an open horizontal crack on the riverside base of a monolith is unacceptable.	
		N/A	There are no concrete items in the channel.	
7. Foundation of Concrete Structures[3]		**A**	No active erosion, scouring, or bank caving that might endanger the structure's stability.	
		M	There are areas where the ground is eroding towards the base of the structure. Efforts need to be taken to slow and repair this erosion, but it is not judged to be close enough to the structure or to be progressing rapidly enough to affect structural stability before the next inspection. For the purposes of inspection, the erosion or scour is not closer to the riverside face of the wall than twice the floodwall's underground base width if the wall is of L-wall or T-wall construction; or if the wall is of sheetpile or I-wall construction, the erosion is not closer than twice the wall's visible height. Additionally, rate of erosion is such that the wall is expected to remain stabile until the next inspection.	
		U	Erosion or bank caving observed that is closer to the wall than the limits described above, or is outside these limits but may lead to structural instabilities before the next inspection. Additionally, if the floodwall is of I-wall or sheetpile construction, the foundation is unacceptable if any turf, soil or pavement material got washed away from the landside of the I-wall as the result of a previous overtopping event.	
		N/A	There are no concrete items in the channel.	
8. Slab and Monolith Joints		**A**	The joint material is in good condition. The exterior joint sealant is intact and cracking/ desiccation is minimal. Joint filler material and/or waterstop is not visible at any point.	

Key: A = Acceptable. M = Minimally Acceptable; Maintenance is required. U = Unacceptable. N/A = Not Applicable. FDR = Flood Damage Reduction

Flood Damage Reduction Channels

For use during Initial and Continuing Eligibility Inspections of flood damage reduction channels

Rated Item	Rating	Rating Guidelines		Location/Remarks/Recommendations
		M	The joint material has appreciable deterioration to the point where joint filler material and/or waterstop is visible in some locations. This needs to be repaired or replaced to prevent spalling and cracking during freeze/ thaw cycles, and to ensure water tightness of the joint.	
		U	The joint material is severely deteriorated or the concrete adjacent to the monolith joints has spalled and cracked, damaging the waterstop; in either case damage has occurred to the point where it is apparent that the joint is no longer watertight and will not provide the intended level of protection during a flood.	
		N/A	There are no concrete items in the channel.	
9. Flap Gates/ Flap Valves/ Pinch Valves[4]		**A**	Gates/ valves open and close easily with minimal leakage, have no corrosion damage, and have been exercised and lubricated as required.	
		M	Gates/ valves will not fully open or close because of obstructions that can be easily removed, or have minor corrosion damage that requires maintenance.	
		U	Gates/ valves are missing, have been damaged, or have deteriorated to the point that they need to be replaced.	
		N/A	There are no flap gates.	
10. Riprap Revetments & Banks		**A**	No riprap displacement or stone degradation that could pose an immediate threat to the integrity of channel bank. Riprap intact with no woody vegetation present.	
		M	Minor riprap displacement or stone degradation that could pose an immediate threat to the integrity of the channel bank. Unwanted vegetation must be cleared or sprayed with an appropriate herbicide.	
		U	Significant riprap displacement, exposure of bedding, or stone degradation observed. Scour activity is undercutting banks, eroding embankments, or impairing channel flows by causing turbulence or shoaling. Rock protection is hidden by dense brush, trees, or grasses.	
		N/A	There is no riprap protecting this feature of the segment / system, or riprap is discussed in another section.	
11. Revetments other than Riprap		**A**	Existing revetment protection is properly maintained, undamaged, and clearly visible.	
		M	Minor revetment displacement or deterioration that does not pose an immediate threat to the integrity of the levee. Unwanted vegetation must be cleared or sprayed with an appropriate herbicide.	
		U	Significant revetment displacement, deterioration, or exposure of bedding observed. Scour activity is undercutting banks, eroding embankments, or impairing channel flows by causing turbulence or shoaling. Revetment protection is hidden by dense brush and trees.	
		N/A	There are no such revetments protecting this feature of the segment / system.	

Key: A = Acceptable. M = Minimally Acceptable; Maintenance is required. U = Unacceptable. N/A = Not Applicable. FDR = Flood Damage Reduction

Flood Damage Reduction Channels

For use during Initial and Continuing Eligibility Inspections of flood damage reduction channels

[1] If weather and flow conditions allow, inspectors should walk in the channel and probe shoal areas in order to estimate extent of blockage of the cross-sectional area where shoaling is present.
[2] The sponsor should be monitoring any observed movement to verify whether the movement is active or inactive.
[3] Inspectors must have as-built drawings available during the inspection so that the lateral distance to the heel and toe of the floodwalls can be determined in the field.
[4] Proper operation of this item must be demonstrated during the inspection.

Key: A = Acceptable. M = Minimally Acceptable; Maintenance is required. U = Unacceptable. N/A = Not Applicable. FDR = Flood Damage Reduction

Flood Damage Reduction Segment / System
Supplemental Data Sheet

This form is intended for the Corps' internal use and may not need to be updated with every inspection.

Name of Segment / System:
Sponsor:
Location:
River Basin:
Project Description:
Authority that Project was Constructed Under:
Date of Construction:
Approximate Annual Maintenance Costs:

Construction: ☐ Federally Constructed ☐ Non-Federally Constructed

Maintenance: ☐ Federally Maintained ☐ Non-Federally Maintained

National Flood Insurance Program:

a. Is the project currently NFIP? ☐ Yes ☐ No
b. If in the NFIP, Date of Certification (per 44 CFR 65.10):

Datum Information:

a. Datum used for the design and construction of this project is:
b. Current recommended datum for this project is:
c. Has the Project been converted to the current recommended datum? ☐ Yes ☐ No

Levee Embankment Data:

a. Levee Designed Gage Function Reading/Station:
b. Level of Protection Provided:
c. Average Height of Levee:
d. Average Crown Width:
e. Average Side Slope:

Protected Features (For use in preparing estimates and PIRs):

a. Total acres protected:
b. Total agriculture production acres protected:
c. Towns:
d. Businesses:
e. Residences:
f. Roads:
g. Utilities:
h. Barns:
i. Machine Sheds:
j. Outbuildings:
k. Irrigation Systems:
l. Grain Bins:
m. Other Facilities:

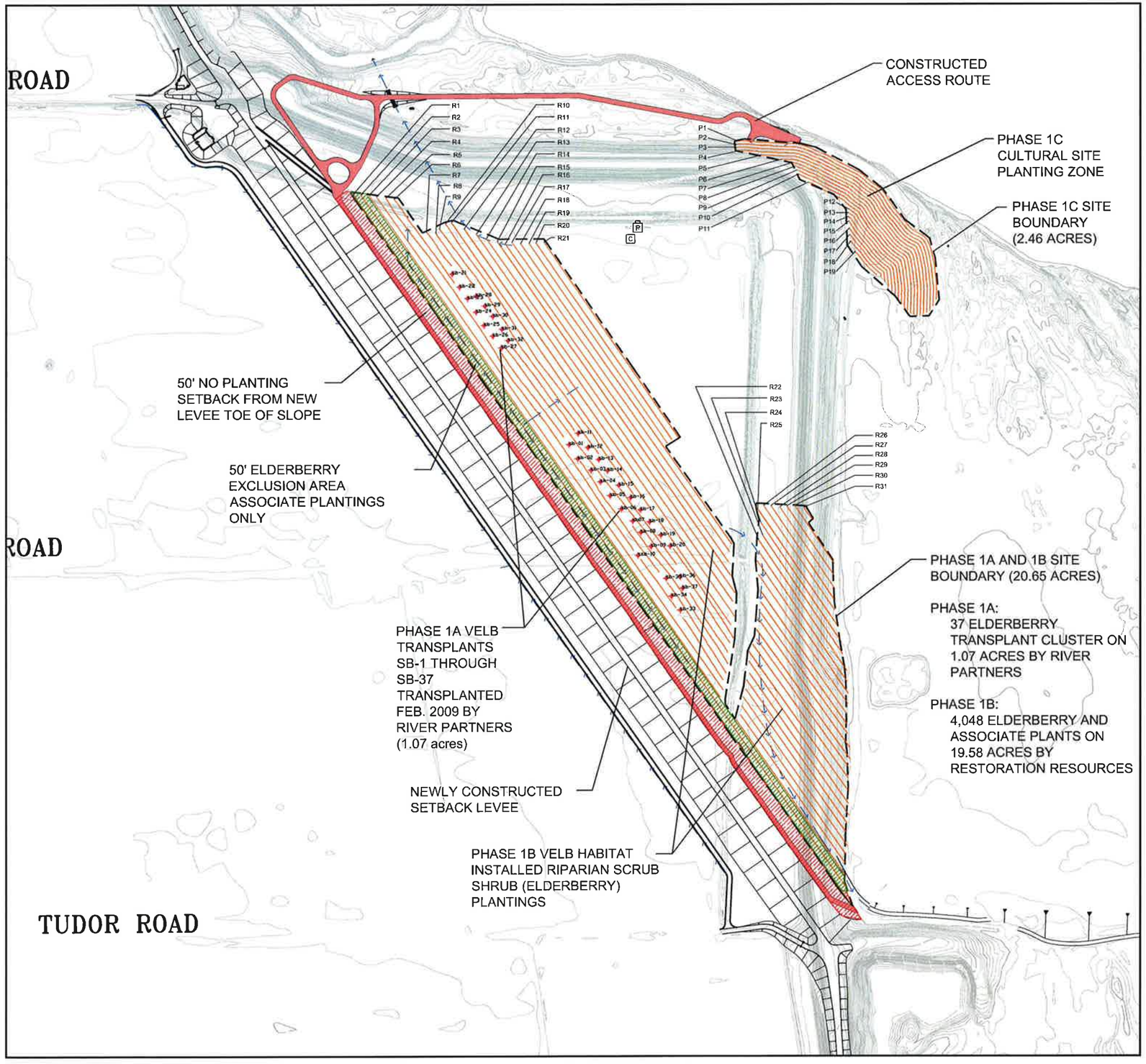

SYMBOLS LEGEND

SYM.	DESCRIPTION	DETAIL
	LIMIT OF WORK (20.65 ACRES) & (2.46 ACRES)	--
	CONTOUR LINES PRIOR TO NEW LEVEE CONSTRUCTION	--
	50' ELDERBERRY EXCLUSION AREA (2 Rows with in this area are planted with associates only)	--
	50' VEGETATION PLANTING EXCLUSION AREA (50' buffer from toe of constructed levee slope)	--
	PREVIOUSLY CONSTRUCTED ACCESS ROUTE	--
	PREVIOUSLY CONSTRUCTED SWALE WATER FLOW DIRECTION	--
	PLANTING ROWS (rows 20' apart, plantings 11' on center running the length of the rows)	--
P	IRRIGATION WELL PUMP LOCATION	--

ROW ID	LENGTH (FT.)
P1	906
P2	912
P3	909
P4	897
P5	808
P6	731
P7	683
P8	653
P9	627
P10	598
P11	535
P12	362
P13	333
P14	303
P15	271
P16	228
P17	190
P18	150
P19	101
TOTAL	10197

ROW ID	LENGTH (FT.)
R1	2722
R2	2656
R3	2519
R4	2467
R5	2350
R6	2001
R7	1497
R8	1631
R9	1965
R10	1925
R11	2078
R12	2002
R13	1901
R14	1864
R15	1709
R16	1694
R17	1658
R18	1629
R19	1258
R20	1258
R21	1239
R22	496
R23	451
R24	440
R25	441
R26	397
R27	354
R28	310
R29	266
R30	221
R31	46
TOTAL	43445

PLANTING NOTES:

1. Please refer to "Planting Matrix" attachment for species planting pattern per row (Sheet 3 of 3).

2. Planting rows with 'Row ID' beginning with "P" are pole or cuttings planted along rows 10-foot apart and installed 5-foot on center.

3. Plantings rows with 'Row ID' beginning with "R" are planted along rows 20-foot apart and installed 11-foot on center.

4. All rows are to be verified in the field by the project restoration ecologist. All additional planting locations in the elderberry transplant area and existing vegetation areas shall be determined in the field by the project restoration ecologist and planted by hand.

0 75 150 300

PREPARED BY:
RESTORATION RESOURCES
3868 CINCINNATI AVENUE
ROCKLIN, CA 95765
TEL 916.408.2069
FAX 916.408.2999
www.restorationresources.net
CA LIC.# 746

APPENDIX A
SHEET 2 OF 3

CLIENT:
Levee District No. 1
of Sutter Co.
243 Second St.
Yuba City, CA 95991
Phone: (530) 673-2484
Email: lel1@yvcv.com

SHEET TITLE:
STAR BEND PHASE 1 HABITAT ENHANCEMENT
As-Built Records
AS-BUILT PLANTING PLAN

NORTH

SCALE 1" = 150'

CHECKED BY: DATE:
ORIGINAL DATE: 7-2-10
DRAWN BY: JOB NUMBER: 2006B
REVISIONS:
1. 10-11-10 Revised per Sutter & DWR
2. 1-11-11 Revised per Sutter & DWR
DATE: 1-11-11
BY: JP
SHEET NO.: L1.2
2 OF 3

Phase 1B Habitat Installed Riparian Scrub Shrub (Elderberry) Plantings Matrix As-Built (Example)

Buffer Row Buffer Row

Plant/Row	1	2	3	4	5	6	7	8	9	10	11	12	13	14	15
1	ROCA	CEOC	ROCA	SAEX	SAEX	ROCA	SAEX	ROCA	SAEX	SAEX	SAEX	RUUR	SAEX	ROCA	BASA
2	ROCA	ROCA	ROCA	ROCA	SAEX	SAEX	SAEX	ROCA	SAEX	ROCA	ROCA	RUUR	SAEX	SAEX	BASA
3	BAPI	ROCA	BAPI	ROCA	ROCA	SAEX	ROCA	SAEX	ROCA	ROCA	ROCA	BASA	ROCA	SAEX	BASA
4	BAPI	BAPI	BAPI	BAPI	ROCA	ROCA	ROCA	SAEX	ROCA	BAPI	RUUR	BASA	ROCA	ROCA	RUUR
5	ROCA	BAPI	SAME	BAPI	BAPI	ROCA	BAPI	ROCA	BAPI	BAPI	RUUR	BASA	SALA	ROCA	RUUR
6	ROCA	ROCA	SAME	SAME	BAPI	BAPI	BAPI	ROCA	BAPI	SAME	BASA	SAME	SALA	BAPI	SAME
7	ROCA	ROCA	SAME	SAME	SAME	BAPI	SAME	BAPI	SAME	SAME	BASA	SAME	CEOC	BAPI	SAME
8	BAPI	ROCA	SAME	SAME	SAME	SAME	SAME	BAPI	SAME	SAME	CEOC	SAME	CEOC	SAME	SAME
9	BAPI	BAPI	CEOC	SAME	SAME	SAME	SAME	SAME	SAME	SAME	CEOC	ROCA	SAME	SAME	ROCA
10	SALA	BAPI	CEOC	CEOC	SAME	SAME	SAME	SAME	SAME	CEOC	SALA	ROCA	SAME	SAME	ROCA
11	SALA	SALA	SALA	CEOC	CEOC	SAME	CEOC	SAME	CEOC	CEOC	SALA	SALA	SAME	SAME	BAPI
12	SALA	SALA	SALA	SALA	CEOC	CEOC	CEOC	SAME	CEOC	SALA	ROCA	SAEX	SAME	CEOC	BAPI
13	ROCA	SALA	SAME	SALA	SAME	CEOC	SALA	CEOC	SALA	SALA	ROCA	BAPI	BAPI	CEOC	SAME
14	ROCA	ROCA	SAME	SAME	SAME	SAME	SALA	CEOC	SALA	SAME	SAME	SAEX	BAPI	SALA	SAME
15	ROCA	ROCA	SAME	SAME	SAME	SAME	SAME	SAME	SAME	SAME	SAME	SAME	SAME	SALA	SAME
16	BASA	ROCA	SAME	SAME	SAME	SALA	SAME	SAME	SAME	SAME	SAME	SAME	SAME	SAME	SAME
17	BASA	BASA	ROCA	SAME	SALA	SALA	SAME	SAME	SAME	SAME	SAME	SAME	SAME	SAME	ROCA
18	ROCA	BASA	ROCA	ROCA	SALA	SAME	SAME	SAME	SAME	ROCA	SAME	SAME	SAME	SAME	ROCA
19	ROCA	ROCA	SAME	ROCA	RUUR	SAME	ROCA	ROCA	ROCA	ROCA	SAME	RUUR	ROCA	SAME	SALA
20	BAPI	ROCA	SAME	SAME	RUUR	ROCA	ROCA	ROCA	ROCA	SAME	SAME	RUUR	ROCA	ROCA	SALA
21	BAPI	BAPI	SAME	SAME	SAME	RUUR	SAME	SAME	SAME	SAME	BASA	BAPI	SAME	ROCA	BAPI
22	BAPI	BAPI	SAME	SAME	SAME	SAME	SAME	SAME	SAME	SAME	BASA	BAPI	SAME	SAME	BAPI
23	SAEX	BAPI	BASA	SAME	SAME	SAME	SAME	SAME	SAME	SAME	BASA	ROCA	SAME	SAME	SAME
24	SAEX	SAEX	BASA	BASA	SAME	SAME	SAME	BAPI	SAME	BASA	RUUR	ROCA	SAME	SAME	SAME
25	ROCA	SAEX	BASA	BASA	BASA	SAME	BASA	BAPI	BASA	BASA	RUUR	SAME	BASA	SAME	SAME
26	ROCA	ROCA	RUUR	BASA	BASA	BASA	BASA	ROCA	BASA	BASA	SAME	SAME	BASA	BASA	SAME
27	BAPI	ROCA	RUUR	RUUR	BASA	BASA	BASA	ROCA	BASA	RUUR	SAME	SAME	BASA	BASA	RUUR
28	BAPI	BAPI	SAME	RUUR	RUUR	BASA	RUUR	SAME	RUUR	RUUR	SAME	SAME	RUUR	BASA	RUUR
29	BASA	BAPI	SAME	SAME	RUUR	RUUR	RUUR	SAME	RUUR	SAME	SAME	SAME	RUUR	RUUR	BAPI
30	BASA	BASA	SAME	SAME	SAME	RUUR	SAME	SAME	SAME	SAME	BASA	CEOC	SAME	RUUR	BAPI
31	BASA	BASA	ROCA	SAME	SAME	SAME	SAME	SALA	SAME	SAME	BASA	CEOC	SAME	SAME	ROCA
32	ROCA	BASA	ROCA	ROCA	SAME	SAME	SAME	SALA	SAME	ROCA	ROCA	RUUR	SAME	SAME	ROCA
33	ROCA	ROCA	BAPI	ROCA	ROCA	SAME	ROCA	BASA	ROCA	ROCA	ROCA	RUUR	ROCA	SAME	SAME
34	CEOC	ROCA	BAPI	BAPI	ROCA	ROCA	ROCA	BASA	ROCA	BAPI	BASA	SAME	ROCA	ROCA	SAME
35	CEOC	CEOC	SAME	BAPI	BAPI	ROCA	BAPI	BASA	BAPI	BAPI	BASA	SAME	BAPI	ROCA	SAME
36	CEOC	CEOC	SAME	SAME	BAPI	BAPI	BAPI	RUUR	BAPI	SAME	CEOC	SAME	BAPI	BAPI	SAME
37	ROCA	CEOC	SAME	SAME	SAME	BAPI	SAME	RUUR	SAME	SAME	CEOC	SAME	SAME	BAPI	CEOC
38	ROCA	ROCA	SAME	SAME	SAME	SAME	SAME	SAME	SAME	SAME	SAME	BASA	SAME	SAME	CEOC
39	BAPI	ROCA	ROCA	SAME	SAME	SAME	SAME	SAME	SAME	SAME	SAME	BASA	SAME	SAME	RUUR
40	BAPI	BAPI	ROCA	ROCA	SAME	SAME	SAME	SAME	SAME	ROCA	SAME	ROCA	SAME	SAME	RUUR
41	ROCA	BAPI	SALA	ROCA	ROCA	SAME	ROCA	SAME	ROCA	ROCA	ROCA	ROCA	ROCA	SAME	SAME
42	ROCA	ROCA	SALA	SALA	ROCA	ROCA	ROCA	ROCA	ROCA	SALA	ROCA	SAEX	ROCA	ROCA	SAME
43	ROCA	ROCA	BAPI	SALA	SALA	ROCA	SALA	ROCA	SALA	SALA	SALA	SAEX	SALA	ROCA	SAME
44	BAPI	ROCA	BAPI	BAPI	SALA	SALA	SALA	SALA	SALA	BAPI	SALA	ROCA	SALA	SALA	SAME
45	BAPI	BAPI	SAME	BAPI	BAPI	SALA	BAPI	SALA	BAPI	BAPI	SALA	ROCA	BAPI	SALA	BASA
46	SALA	BAPI	SAME	SAME	BAPI	BAPI	BAPI	BAPI	BAPI	SAME	BASA	BAPI	BAPI	BAPI	BASA
47	SALA	SALA	SAME	SAME	SAME	BAPI	SAME	BAPI	SAME	SAME	BASA	BAPI	SAME	BAPI	ROCA
48	SALA	SALA	SAME	SAME	SAME	SAME	SAME	SAME	SAME	SAME	BASA	SAME	SAME	SAME	ROCA
49	ROCA	SALA	RUUR	SAME	SAME	SAME	SAME	SAME	SAME	SAME	RUUR	SAME	SAME	SAME	SAEX
50	ROCA	ROCA	RUUR	RUUR	SAME	RUUR	SAME	SAME	SAME	RUUR	RUUR	SAME	SAME	SAME	SAEX

Plant Flag Code	Common Name	Scientific Name	Project Totals
BAPI	coyote brush	*Baccharis pilularis*	524
BASA	mule fat	*Baccharis salicifolia*	358
CEOC	bottun bush	*Cepholanthus occidentalis*	222
ROCA	California rose	*Rosa californica*	791
RUUR	California blackberry	*Rubus ursinus*	316
SAEX	sandbar willow	*Salix exigua*	137
SALA	arroyo willow	*Salix lasiolepis*	225
SAME	blue elderberry	*Sambucus mexicana*	1,475
		Total	4,048

0 75 150 300

PREPARED BY:
RESTORATION RESOURCES
3866 CINCINNATI AVENUE
ROCKLIN, CA 95765
TEL 916.408.6080
FAX 916.408.2999
www.restorationresources.net
CA LIC. #

APPENDIX A
SHEET 3 OF 3

CLIENT:
Levee District No. 1
of Sutter Co.
243 Second St.
Yuba City, CA 95991
Phone (530) 673-2404
Email: lrt1@yvjx.com

SHEET TITLE:
STAR BEND PHASE 1 HABITAT ENHANCEMENT
As-Built Records
SAMPLE PLANTING MATRIX

NORTH

SCALE

CHECKED BY: DATE:
ORIGINAL CA.TE: 26-05 DRAWN BY: MAK JOB NUMBER: 26085
REVISIONS: No. DATE BY
REVISED PLAN

SHEET NO: L1.3

3 of 3

RESTORATION
RESOURCES

Amended Feather River Setback Levee and Phase 1 Habitat Enhancement Project at Star Bend

2010 Monitoring Report
Year 1

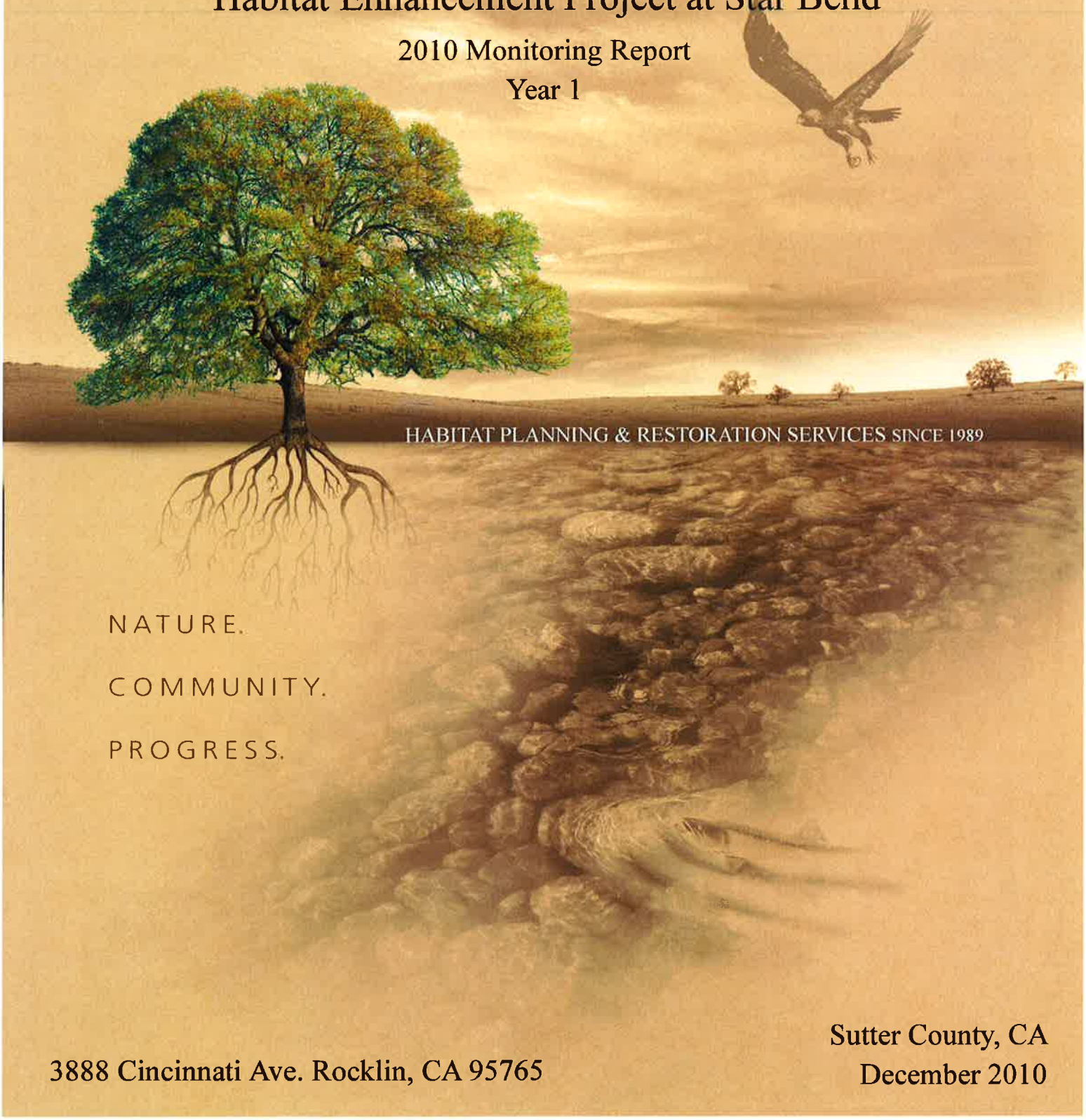

3888 Cincinnati Ave. Rocklin, CA 95765

Sutter County, CA
December 2010

Feather River Setback Levee and Phase 1 Habitat Enhancement Project at Star Bend

Sutter County, CA

July 2010
Amended December 2010

Submitted to:
U.S. Fish and Wildlife Service
2800 Cottage Way
Sacramento, CA 95825

Levee District One of Sutter County
243 Second St.
Yuba City, CA 95991

Submitted by:
Restoration Resources
3888 Cincinnati Avenue
Rocklin, CA 95765

RESTORATION
RESOURCES

Table of Contents

1.0 Introduction 1
1.1 Permit Numbers 1
1.2 Background 1
1.3 Summary of Results 1
2.0 Summary of Project Installation 3
2.1 Plant Installation 3
2.2 Irrigation Installation 4
2.3 Signs and Fences 5
3.0 Summary of Maintenance Activities 5
3.1 Irrigation 5
3.2 Weed Control 5
4.0 Monitoring 6
4.1 Performance Criteria 6
4.2 Monitoring Methods 6
4.2.1. Adult Beetle and Exit Hole Surveys 6
4.2.2. Plant Survivorship 7
4.2.3. Photo Documentation 7
4.3 Results and Discussion 8
4.3.1. Adult Beetle and Exit Hole Surveys 8
4.3.2. Plant Survivorship 8
4.3.3. General Site Conditions 9
5.0 Conclusion 9
6.0 References 10

List of Tables

Table 1. Phase 1B VELB Habitat Installed Woody Plantings 4
Table 2. Phase 1C Cultural Site Installed Woody Plantings 4
Table 3. Plant Health and Vigor Rating System 7
Table 4. Plant Survivorship, Average Height and Average Health 8

List of Figures

Figure 1. Project Location Map 2

Appendices

Appendix A: As-built Drawings

Appendix B: Photo Documentation

1.0 Introduction

1.1 Permit Numbers

USFWS Biological Opinion Reference No. 81420-2009-F-0372-1; February 6, 2009.
CDFG Streambed Alteration Agreement Notification No. 1600-2007-0217-R2.
CVFPB Encroachment Permit No. 18191, May 11, 2009.

1.2 Background

The Feather River Setback Levee and Habitat Enhancement Project at Star Bend is located on the Feather River, approximately six miles south of Yuba City, Sutter County. The project site is located just east of State Highway 99 and Garden Highway, off of Star Bend Road.

In 2009 a setback levee was constructed on the west bank of the Feather River at River Mile 18.0 and converted approximately 55 acres of former orchard and levee into floodplain habitat. The new setback levee has replaced an existing levee that posed a high risk of failure and will decrease the flood stage, velocity, and scour potential of the Feather River. Figure 1 shows the general location of the project area.

The overall project is broken into several phases. Phase 1A required 37 existing elderberry shrubs to be transplanted to a nearby location within the project area prior to construction of the setback levee at Star Bend. Phase 1B required 20 acres of elderberry and native associate plants to be installed to enhance habitat for the valley elderberry longhorn beetle (*Desmocerus californicus dimorphus*), herein referred to as VELB, a listed threatened species under the federal Endangered Species Act. Phase 1C required the planting of approximately 2.46 acres of California blackberry (*Rubus ursinus*) and California rose (*Rosa californica*) to protect an area of cultural significance. This document serves as an amended report for the Year 1 Feather River Setback Levee and Phase 1 Habitat Enhancement Project at Star Bend report submitted in July 2010. Since July, additional site maintenance had occurred that is documented in this report. The submittal of this report will establish December 31st as the end of one establishment year. The following establishment year will begin on January 1st. Henceforth, monitoring reports will be submitted by December 31st for that congruent establishment year.

1.3 Summary of Results

A total of two exit hole surveys were performed between February 14th and June 30th, 2010. During those visits a total of three potential VELB exit holes were observed on elderberry transplant number SB-37 and a total of 102 that looked more than one year old were observed over all the elderberry transplants (SB-01 through SB-37). No adult VELB were observed during the site visits. A complete count of all installed elderberries and native associate plantings was performed prior to June 30th. A total of 4,048 plants were installed in Phase 1B and by June 30th, 2010; 3,921 individuals were alive for an overall survivorship of 97.1 percent. A total of 2,544 native associates were alive out of 2,573 installed and a total of 1,377 elderberries were alive out of 1,475 installed, with a percent survivorship of 98.9 percent and 93.4 percent survivorship respectively.

Figure 1. Project Location Map

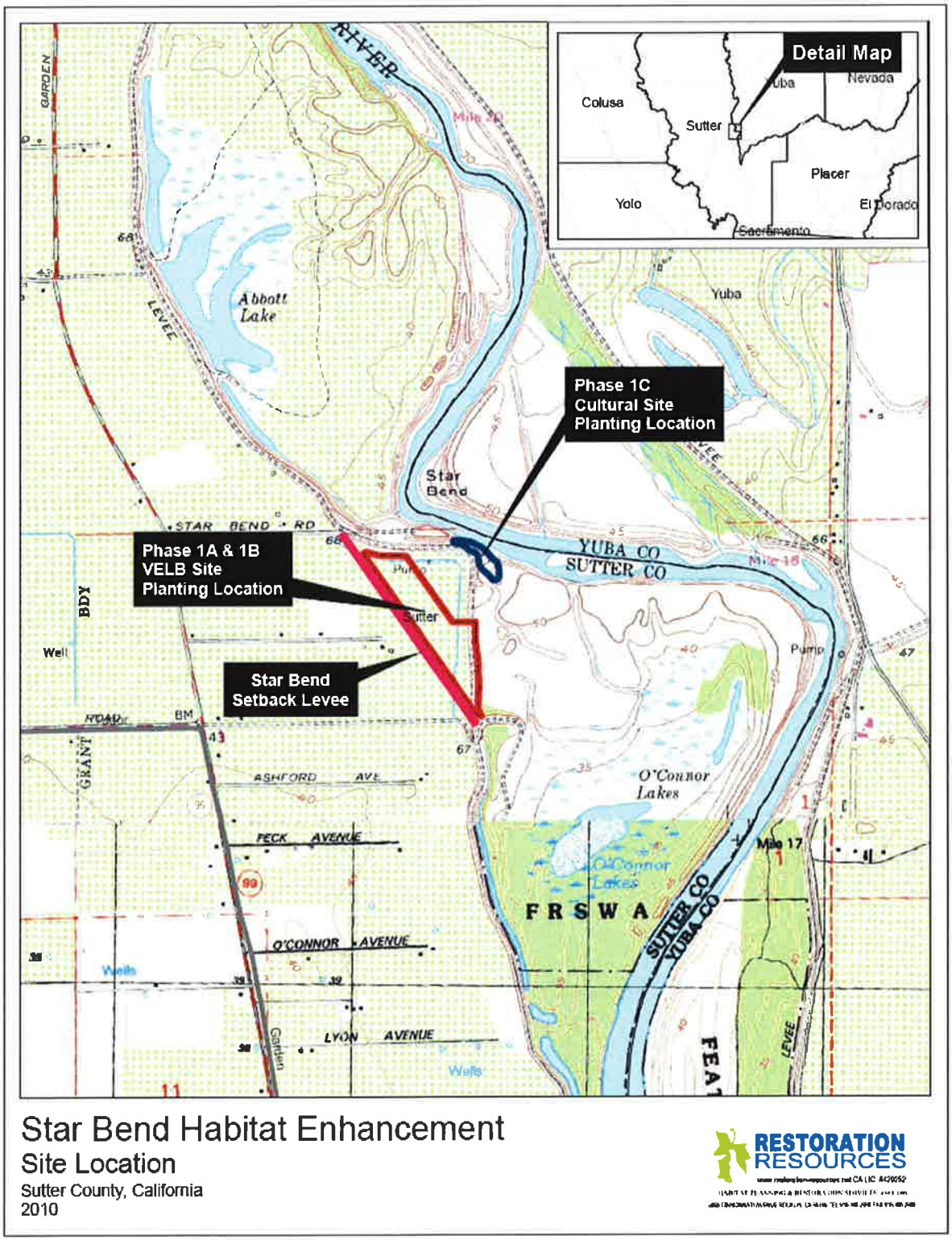

Star Bend Habitat Enhancement
Site Location
Sutter County, California
2010

RESTORATION RESOURCES

2.0 Summary of Project Installation

Native plant species were planted within the project area to mitigate for impacts caused by the construction of the Feather River Setback Levee at Star Bend. Phase 1A transplanting took place between February 9 and February 20, 2009 by River Partners. They transplanted 37 elderberry clusters containing 210 or more stems greater than 1-inch in diameter. Phase 1B plant installation began on February 8, 2010 beginning with equipment mobilization and site preparation and ended on February 26, 2010. Prior to the Phase 1B plant installation, the irrigation mainline valves and lateral lines were installed. The irrigation system was functional by May 11, 2010 with the rehabilitation of a former agricultural well. As-built drawings for plant and irrigation installation are available in Appendix A.

2.1 Plant Installation

Planting rows were created in the elderberry enhancement area prior to plant installation using a tractor with disc attachment and GPS equipment. A total of 32 rows were created for planting installation and were spaced approximately 20 feet on center. Planting rows were made so they do not come within 20 feet of the elderberry transplants installed during Phase 1A work by River Partners. Planting rows were identified using GPS equipment and are identified in the as-built drawings in Appendix A

Plant flag layout was performed in the field by restoration ecologists and provided each plant to be spaced 11 feet on center. Restoration ecologists took micro-site conditions into account when performing plant flag layout to provide beneficial growing conditions for the native plants. Following plant flag layout, planting holes were created using a T-200 bobcat tractor with an auger attachment. Each hole was over-excavated and then backfilled with the remaining soil, creating a more friable soil medium that facilitates root development. Plants were installed at each plant flag and supplemented with endo/ecto mycorrhizal inoculum from Mycorrhizae Applications to support beneficial microbial activity during root development. Following plant installation each plant was fitted with a 12-inch paper tree box supported by a wood stake. Each installed plant was then fitted with drip irrigation tubing containing three drip line emitters spaced 12-inches apart.

The cultural site was enhanced by installing 1,020 California blackberry (*Rubus ursinus*) and 1,020 California rose (*Roca californica*) cuttings. The planting rows for the cultural site were spaced approximately 10 feet on center and individuals were installed 5 feet on center. Table 1 and 2 identifies the total amount of plantings that were installed at each site.

Table 1. Phase 1B VELB Habitat Installed Riparian Scrub Shrub Plantings

Common Name	Scientific Name	Installed
coyote brush	*Baccharis pilularis*	524
mule fat	*Baccharis salicifolia*	358
buttonbush	*Cephalnathus occidentalis*	222
California rose	*Rosa californica*	791
California blackberry	*Rubus ursinus*	316
sandbar willow	*Salix exigua*	137
Arroyo willow	*Salix lasiolepis*	225
	Associates Total	**2573**
blue elderberry	*Sambucus mexicana*	1475
	Overall Total	**4048**

Table 2. Phase 1C Cultural Site Installed Riparian Scrub Shrub Plantings

Common Name	Scientific Name	Installed
California rose	*Rosa californica*	1,020
California blackberry	*Rubus ursinus*	1,020
	Total	**2,040**

2.2 Irrigation Installation

Irrigation to woody plant species is provided through a drip irrigation system. The system is connected to a sub-grade 4-inch PVC main line that begins at a rehabilitated agricultural well located along an access road at the north edge of the project between the elderberry planting site and the cultural site. The system utilizes three valves to irrigate the different portions of the site. Valve 1 irrigates the new elderberries and native associate plantings (Phase 1B), Valve 2 irrigates the elderberry transplants (Phase 1A) and Valve 3 irrigates the cultural site (Phase 1C). All three valves are operated by an electric programmable irrigation controller.

Drip tubing was placed along the planting rows ensuring that the three drip emitters were placed at each individual plant. Drip line "T" assemblies were used to connect each line of drip tubing to a lateral PVC pipe, stemming off of Valve 1. Air relief valves were installed at the end of each lateral line to flush the system during irrigation operations. Each Phase 1A elderberry transplant is fitted with an 18-foot drip tubing ring located around the drip line. This drip tubing is connected to a 1-inch on-grade lateral PVC line that connects to Valve 2. A 2½-inch lateral PVC pipe extends from Valve 3 to the cultural site (Phase 1C) where drip line "T" assemblies are used to connect drip tubing. Drip tubing was placed along each planting row in the cultural site ensuring that the three drip emitters were placed at each individual cutting.

Although planting was completed on February 26, 2010, irrigation installation was not operational until May 11, 2010 due to favorable weather conditions and delays in well

rehabilitation. The irrigation system became operational on May 11, 2010 using a powered generator. On June 11, 2010, permanent electrical power from Pacific Gas and Electric (PG&E) was provided to the pump making it fully automated. Although plants were installed prior to the irrigation system being fully operational, above average rainfall in the regional area provided the plantings with adequate water. Between February and May 2010 the area received approximately 7-inches of rain. Frequent site visits were made to monitor soil conditions and plant stress. During this period soils were found to have fair to good moisture and warranted no action.

2.3 Signs and Fences

Permanent VELB protection signs were installed around the project area (Phases 1A and 1B) every 300 feet indicating the purpose of the habitat site. Fencing is not warranted and was not installed as part of this project.

3.0 Summary of Maintenance Activities

This report summarizes maintenance activities from May 2010 to October 2010. Maintenance activities consisted of non-native weed control, irrigation activities, and replanting.

3.1 Irrigation

The irrigation system was operated from May through October 2010 by manual and automatic operation. During irrigation operations the electronic timer been has been set to operate each valve individually for 4 hours, twice per week. This regime would provide each plant with approximately 6.0 gallons per irrigation day or 12.0 gallons per week. This is based on the drip tube emitters having an emission rate of 0.5 gallons per hour (GPH) and each plant receiving 1.5 GPH.

In June, restoration technicians flushed the system and checked the irrigation system for leaks. In several areas the tubing had expanded and/or contracted likely due to heat and had slightly offset the emitters from the plantings. The tubing in these areas were cut, aligned properly and reattached. Other areas that had demonstrated leaks were repaired using Teflon tape to seal threads or by re-applying glue to connection points.

In September, restoration technicians manually operated each irrigation valve to inspect the operability of the system. Repairs were made to the ½-inch drip tubing where necessary. In late October the irrigation system was winterized by draining each valve, turning off the electronic timer and shutting down the power to the system. It was noted by the restoration technicians that the power pole at the pump station was leaning in a precarious position and may need to be realigned in an upright position in the future.

3.2 Weed Control

Two major weed control events occurred in April and in June 2010. Weed control included mechanical and manual methods to reduce non-native weeds around the new elderberries and native associate plantings. During each event, a tractor with a mowing attachment was used to mow tall vegetation in the center of each row. String trimmers were used to mow the areas around each planting to prevent competition for water and

sunlight. During site visits weeds were hand pulled from within the plant boxes where string trimmers were not accessible.

Weed control continued in August 2010. All areas within the site were the focus of mechanical implementation. Areas between the plant rows were, once again, mowed using a tractor and mowing attachment, while the plant rows themselves were string trimmed. Some weeds, primarily Johnson grass (*Sorghum halepense*) and thistle species, were the targeted for hand removal, especially when found growing within the milk carton tree protectors.

3.3 Replanting

During the August weed control event, the cultural site was subjected to mechanical weed control. Mechanical weed control was performed using string trimmers fitted with a flexible plastic trimmer line due to the amount of cobble on-site and potential fire hazard. Restoration Resources enhanced the area by replanting California rose and California blackberry with nursery grown container plants. Prior to plant installation restration technicians walked the cultural site are and placed planting flags at emitter locations that had dead individuals from the original plant installation. A total of 200 blackberries and 100 rose were installed as tree band sized container plants.

4.0 Monitoring

4.1 Performance Criteria

A minimum survival rate of at least 60 percent of the elderberry plants and 60 percent of the associated native plants for Phase 1B must be maintained throughout the monitoring period. If within one year of discovery the survival has dropped below 60 percent, failed plantings will be replaced to bring survivorship above the success criteria. In August 2010 the performance criteria of a minimum survival rate of at least 10 percent of the cultural site plantings was established for Phase 1C. There are no performance criteria for the elderberry transplants.

4.2 Monitoring Methods

Although the timing and schedule for the Adult Beetle and Exit Hole Surveys will not change, the Woody Plant Survivorship monitoring timing will change in subsequent years and as a result this change will require future monitoring reports to be submitted by December 31st of that establishment year.

4.2.1. Adult Beetle and Exit Hole Surveys

Surveys were conducted by closely examining the stems of all transplanted elderberries subject to monitoring for the presence of adult beetles and exit holes. Once exit holes were found, data was recorded on stem size, hole-height on stem, and whether the hole looked new or old. All exit holes below eight feet and in live elderberry stems larger than one inch were assumed to be made by VELB.

4.2.2. Plant Survivorship

Woody container plantings and cuttings within the project area were evaluated for survivorship and were given a health rating. Plants with leaves and/or greenish bud scales were considered alive. If live leaves and greenish bud scales were not present, monitors created a small (<4mm long) scratch on a main stem of the plant, to a depth just under the bark. If the tissue under the bark was moist and/or greenish, the plant was considered alive. A spot on the ground next to each tree was marked with non-toxic ground marking paint in order to prevent double counting. Survivorship percentage was calculated by dividing the number of live plants by the total number of plants installed. Each woody planting was located in the field in June 2010, and its health was evaluated according to the nine point scale summarized in Table 3. In subsequent establishment years woody plant survivorship will be conducted later in the year (September) in order to have a better evaluation on the success of the woody plantings survivorship through the full summer season. Since performance criteria for Phase 1C were established in August 2010, only a qualitative analysis was performed for the cultural site plantings. At the time of the qualitative analysis it was determined that more than 10 percent of the cultural site plantings have survived, but more than 30 percent have died due to competition with non-native weed species. To ensure that there were a minimum of 10 percent of the cultural site plantings, replants were installed to exceed the minimum 10 percent performance criteria.

Table 3. Plant Health and Vigor Rating System

Numerical Index	Rating	Characteristics
1-3	Good	Free of any signs of stress, disease, nutrients, or parasite. 100-67% healthy foliage cover. Leaves dark green, appropriate size for tree species and development. Thick canopy cover, proportional height to DBH ratio.
4-6	Fair	Evidence of stress, disease, nutrient deficiency, or parasites. Minor leaf loss or deformity. 66-34% healthy foliage cover. Leave green to yellow, a little smaller than average.
7-9	Poor	Clear evidence of widespread stress, disease, nutrient deficiency, or parasites. 33-0% foliage cover. Substantial leaf loss or yellowing, bud death. No canopy cover. High potential of tree mortality.

4.2.3. Photo Documentation

Photos were taken during the monitoring events that show a representative of plant growth at the site in random locations. Permanent photo stations were not established, but will be installed at the end of Year 1 in order to make comparisons of plant growth, health, and site conditions over subsequent years in the fall of each year. Photos of each elderberry transplant were taken from the same location during each exit hole survey. Representative photos are provided in Appendix B.

4.3 Results and Discussion

4.3.1. Adult Beetle and Exit Hole Surveys

A total of two exit hole surveys were performed on March 22nd and June 30th, 2010. During the June visit a total of three new potential VELB exit holes were identified on transplant number SB-37. One of the new potential exit holes were located approximately 3 feet high on a stem measuring 5-inches in diameter. The other two new potential exit holes were located approximately 6 feet high on branches that were 3-inches and 5-inches in diameter. A total of 102 potential VELB exit holes that looked more than one year old were observed over all the elderberry transplants. No adult VELB were observed during the site visits.

4.3.2. Plant Survivorship

There were eight (8) species comprised of 4,048 individual woody plants assessed for survivorship. Of the 4,048 individuals, 3,912 plants were found to be in to be in good or fair health, 9 plants were considered to be in poor health and 127 plants were dead, with an overall survivorship of 97.1 percent. The total survivorship for associate plant species is 98.9 percent. Average height of the native associates is 2.42 feet and the average health and vigor score is 1.64. The total survivorship for blue elderberry is 93.4 percent. Average height of the blue elderberries is 2.04 feet and the average health and vigor score is 2.38. Table 4 summarizes the results from plant survivorship monitoring.
During exit hole surveys each elderberry transplant was assessed for survivorship, health and vigor. Out of the 37 elderberry transplants three (3) plants had all dead stems and no new regenerating or budding stems. These elderberries were assumed to have been dead during the exit hole surveys. The total percent survivorship of the elderberry transplants is 91.9 percent and the average health and vigor score is 4.16. The elderberry transplants that are assumed to be dead are SB-01, SB-16 and SB-19.

Table 4. Plant Survivorship, Average Height and Average Health

Common Name	Scientific Name	Installed	Alive	Dead	Percent Survivorship (%)	Average Height (ft)	Average Health
coyote brush	*Baccharis pilularis*	524	518	6	98.85	2.65	2.28
mule fat	*Baccharis salicifolia*	358	352	6	98.32	3.20	1.45
buttonbush	*Cephalnathus occidentalis*	222	220	2	99.10	1.08	1.76
California rose	*Rosa californica*	791	780	11	98.61	1.70	1.84
California blackberry	*Rubus ursinus*	316	312	4	98.73	1.44	1.37
sandbar willow	*Salix exigua*	137	137	0	100	3.66	1.37
arroyo willow	*Salix lasiolepis*	225	225	0	100	3.21	1.45
	Associates Total	**2573**	**2544**	**29**	**98.87**	**2.42**	**1.64**
blue elderberry	*Sambucus mexicana*	1475	1377	98	93.36	2.04	2.38
	Overall Total	**4048**	**3921**	**127**	**97.05**	**2.23**	**2.01**

4.3.3. General Site Conditions

Surface water was present within the 20 acre habitat area in March due to low depressions that do not provide sufficient drainage, but began to dry out into April. These areas were avoided as best as possible during plant flag layout so that more xeric species like elderberry do not sit in saturated soils. These areas may have stayed inundated due to the more than average rain received in the regional area during the winter and early spring season. All roads and signs show no signs of damage or vandalism. Pedestrians, vehicles, and horses have been observed walking on the top of the newly created setback levee and occasionally on the floodplain side at the toe of the levee slope, but have not been observed within or show no signs of disturbing the planting areas. Weeds have been kept mowed early in the season and demonstrate no significant threats to the plantings. In June, the levee district performed a controlled burn on the levee slope to assist in levee inspections. There are no signs of adverse affects or threats from performing the burn.

5.0 Conclusion

Post construction monitoring results show that the VELB habitat is meeting performance criteria. Although irrigation installation was completed later in the spring season with the construction of the water well pump the native woody plantings have demonstrated good vegetative development. Some plantings may have benefited from being placed in areas that demonstrated ponding early in the season (e.g. willow species). Three elderberry transplants are assumed to be dead and have no living vegetative growth. Three potential VELB exit holes were found on transplant number SB-37, but no VELB individuals were observed during exit hole surveys.

Construction began in February 2010 and was completed with the installation of the water well pump in May 2010. All plantings were installed by February 26, 2010. Maintenance activities included irrigation and weed management. During maintenance site visits the irrigation system was flushed and inspected for functionality and operability. Drip lines were walked and checked for damage. The irrigation was being operated using an automatic timer and was programmed to operate for 4 hours per valve twice per week. With the onset of natural precipitation restoration technicians winterized the irrigation system by draining the valves and shutting down the power to the system. Weeds were mowed in between rows and string trimmed between plants. No vandalism was observed on-site. Signs and infrastructure was in good condition during site visits. Pedestrians, vehicles, and horses were observed using the road at the top of the levee and the road at the base of the levee, but have had no significant impacts to the new plantings or the elderberry transplants. The levee district had performed a controlled burn on the levee slope in June to remove vegetation for levee inspections and maintenance. The native plantings or elderberry transplants did not appear to have been adversely affected by the controlled burn.

6.0 References

River Partners. 2009. Elderberry Transplant Report Star Bend Setback Levee Project. Prepared for the U.S. Fish and Wildlife Service and Levee District One. Sutter County, CA.

River Partners, Stillwater Sciences. 2009. Habitat Enhancement Plan for the Feather River Setback Levee and Habitat Enhancement Project at Star Bend. Prepared for Levee District One and Wood Rodgers. Sutter County, CA.

U.S. Fish and Wildlife Service. Revised 1999. Conservation Guidelines for the Valley Elderberry Longhorn Beetle. Sacramento, CA.

Appendix A
As-Built Drawings

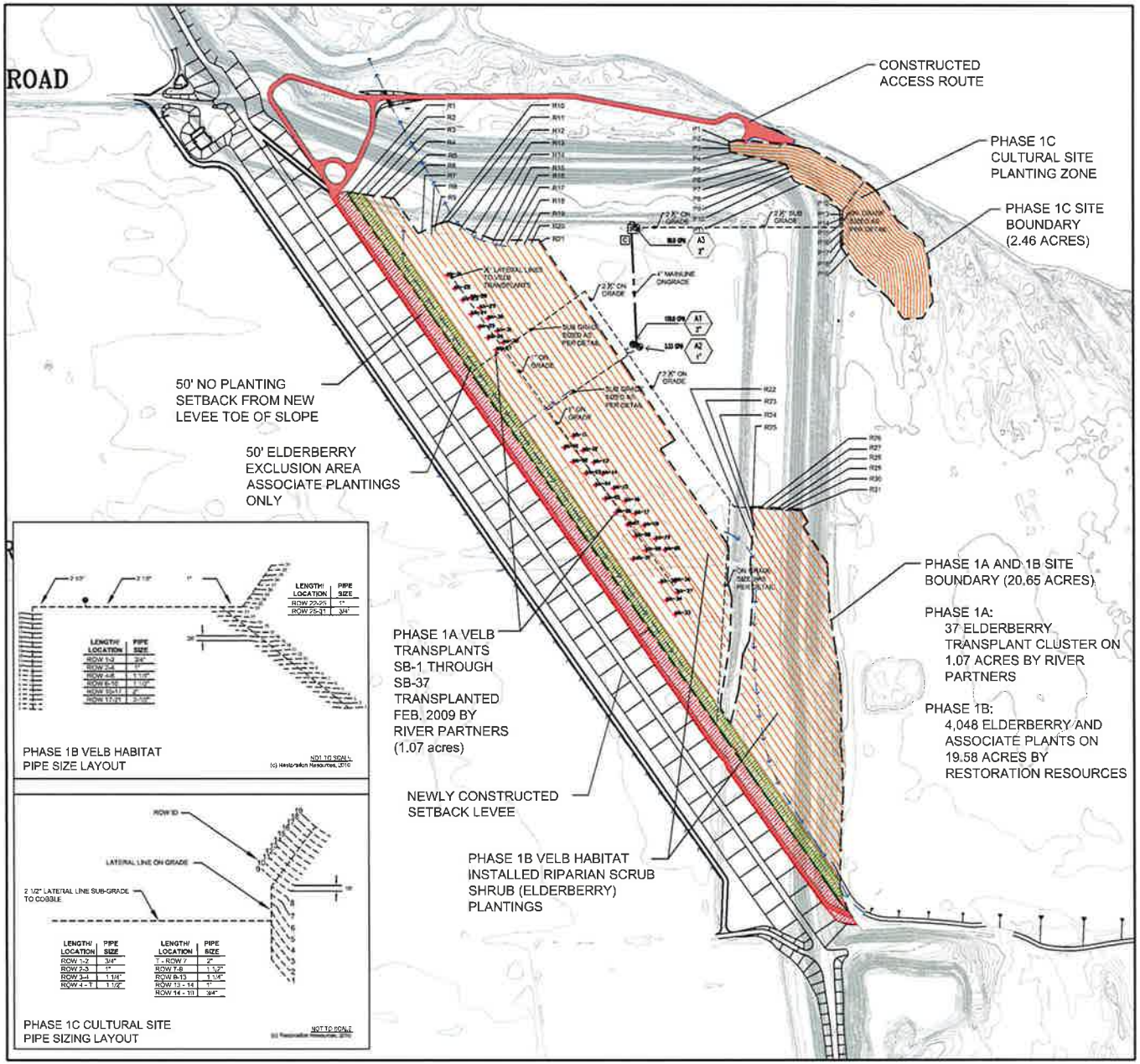

SYMBOLS LEGEND

SYM.	DESCRIPTION	DETAIL
	UNIT OF WORK (20.65 ACRES) & (2.46 ACRES)	--
	CONTOUR LINES PRIOR TO NEW LEVEE CONSTRUCTION	--
	50' ELDERBERRY EXCLUSION AREA (2 Rows within this area are planted with associates only)	--
	50' VEGETATION PLANTING EXCLUSION AREA (50' buffer from toe of construction levee slope)	--
	PREVIOUSLY CONSTRUCTED ACCESS ROUTE	--
	PREVIOUSLY CONSTRUCTED SWALE WATER FLOW DIRECTION	--
	PLANTING ROWS (rows 20' apart, plantings 5' on center running the length of the rows)	--
P	IRRIGATION WELL PUMP LOCATION	--

Phase 1A Riparian Scrub Shrub (Elderberry) Transplanted Clusters			
Common Name	Scientific Name	Installed	Density (plants per acre over 1.07 acres)
blue elderberry	Sambucus mexicana	37	34.6

Phase 1B VELB Habitat Installed Riparian Scrub Shrub (Elderberry) Plantings				
Common Name	Scientific Name	Installed	Percent of Total Installed	Density (plants per acre over 19.58 acres)
coyote bush	Baccharis pilularis	524	12.9%	26.8
mule fat	Baccharis salicifolia	308	7.6%	15.7
buttonbush	Cephalanthus occidentalis	220	5.5%	11.2
California rose	Rosa californica	795	19.5%	40.6
California blackberry	Rubus ursinus	316	7.8%	16.1
tandilar willow	Salix exigua	152	3.8%	7.8
Arroyo willow	Salix lasiolepis	225	5.6%	11.5
	Associates Total	2,573	63.6%	131.4
blue elderberry	Sambucus mexicana	1,475	36.4%	75.3
	Overall Total	4,048	100.0%	206.7

Phase 1C Cultural Site Installed Riparian Scrub Shrub (Blackberry) Plantings				
Common Name	Scientific Name	Installed	Percent of Total Installed	Density (plants per acre over 2.46 acres)
California rose	Rosa californica	1,825	50.9%	414.6
California blackberry	Rubus ursinus	1,825	50.0%	414.6
	Overall Total	3,640	100.0%	826.3

PLANTING NOTES:

1. Phase 1C Cultural site Plantings are cuttings planted along rows 10-foot apart and installed 5-foot on center.

2. Phase 1B VELB Habitat Installed Woody Plantings are planted along rows 20-foot apart and installed 11-foot on center.

IRRIGATION LEGEND

SYMBOL	DESCRIPTION	MANUFACTURER - MODEL	DETAIL	REMARKS
P	WELL PUMP W/ FILTER	[illegible]	-	[illegible]
[illegible]	CONTROL VALVE	[illegible]	-	[illegible]
[illegible]	[illegible]	[illegible]	-	[illegible]
[illegible]	[illegible]	[illegible]	-	[illegible]
[illegible]	[illegible]	[illegible]	-	[illegible]
C	CONTROLLER	[illegible]	-	[illegible]
[illegible]	[illegible]	[illegible]	-	[illegible]
[illegible]	[illegible]	[illegible]	-	[illegible]
[illegible]	[illegible]	[illegible]	-	[illegible]

A20 — VALVE NUMBER
20 — G.P.M.
1" — VALVE SIZE

0 75 150 300

PREPARED BY: RESTORATION RESOURCES
3840 CROW CANYON ROAD, SUITE 300
SAN RAMON, CA 94582
TEL 510.625.2800
FAX 510.625.2805
www.restorationresources.com
CALIC

APPENDIX A
SHEET 1 OF 3

CLIENT: Levee District No. 1
c/o Sac Co.
243 Second St.
Yolo Cty, CA 95961
Phone: (530) 662-5910
Email: [illegible]

SHEET TITLE: STAR BEND PHASE 1 HABITAT ENHANCEMENT
As-Built Records
AS-BUILT PLANTING & IRRIGATION PLAN

NORTH

SCALE 1" = 150'

SHEET NO: L1.1

1 of 3

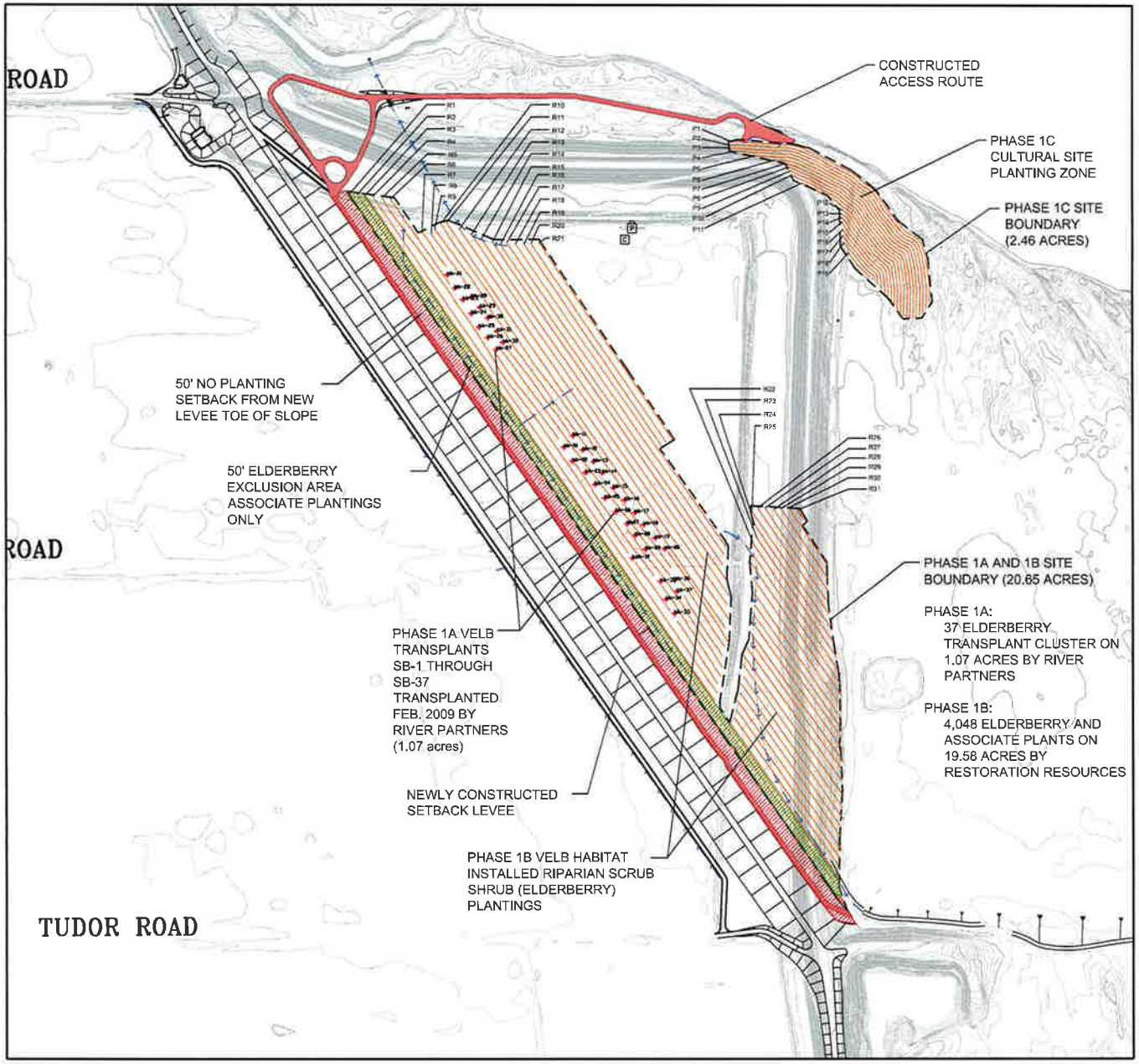

SYMBOLS LEGEND

SYM.	DESCRIPTION	TOTAL
	LIMIT OF WORK (20.65 ACRES) & (2.46 ACRES)	--
	CONTOUR LINES PRIOR TO NEW LEVEE CONSTRUCTION	--
	50' ELDERBERRY EXCLUSION AREA (3 Rows with in the area are darked with associates only)	--
	50' VEGETATION PLANTING EXCLUSION AREA (50' buffer from toe of construction levee slope)	--
	PREVIOUSLY CONSTRUCTED ACCESS ROUTE	--
	PREVIOUSLY CONSTRUCTED SWALE WATER FLOW DIRECTION	--
	PLANTING ROWS (rows 20' apart, plantings 11' on center running the length of the rows)	--
	IRRIGATION WELL PUMP LOCATION	--

ROW ID	LENGTH (FT.)
P1	903
P2	912
P3	909
P4	897
P5	803
P6	731
P7	683
P8	653
P9	627
P10	599
P11	535
P12	362
P13	333
P14	303
P15	271
P16	229
P17	190
P18	150
P19	101
TOTAL	10197

ROW ID	LENGTH (FT.)
R1	2722
R2	2656
R3	2519
R4	2467
R5	2350
R6	2001
R7	1497
R8	1631
R9	1965
R10	1925
R11	2078
R12	2002
R13	1901
R14	1864
R15	1709
R16	1694
R17	1658
R18	1629
R19	1258
R20	1258
R21	1239
R22	496
R23	451
R24	440
R25	441
R26	397
R27	354
R28	310
R29	266
R30	221
R31	46
TOTAL	43445

PLANTING NOTES:

1. Please refer to "Planting Matrix" attachment for species planting pattern per row (Sheet 3 of 3).

2. Planting rows with 'Row ID' beginning with "P" are pole or cuttings planted along rows 10-foot apart and installed 5-foot on center.

3. Plantings rows with 'Row ID' beginning with "R" are planted along rows 20-foot apart and installed 11-foot on center.

4. All rows are to be verified in the field by the project restoration ecologist. All additional planting locations in the elderberry transplant area and existing vegetation areas shall be determined in the field by the project restoration ecologist and planted by hand.

0 75 150 300

PREPARED BY: RESTORATION RESOURCES

APPENDIX A
SHEET 2 OF 3

CLIENT: Levee District No. 1

SHEET TITLE: STAR BEND PHASE 1 HABITAT ENHANCEMENT
As-Built Records
AS-BUILT PLANTING PLAN

NORTH

SCALE 1" = 150'

SHEET NO: L1.2

2 of 3

Phase 1B Habitat Installed Riparian Scrub Shrub (Elderberry) Plantings Matrix As-Built (Example)

Buffer Row Buffer Row

Plant/Row	1	2	3	4	5	6	7	8	9	10	11	12	13	14	15
1	ROCA	CEOC	ROCA	SAEX	SAEX	ROCA	SAEX	ROCA	SAEX	SAEX	SAEX	RUUR	SAEX	ROCA	BASA
2	ROCA	ROCA	ROCA	ROCA	SAEX	SAEX	SAEX	ROCA	SAEX	ROCA	ROCA	RUUR	SAEX	SAEX	BASA
3	BAPI	ROCA	BAPI	ROCA	ROCA	SAEX	ROCA	SAEX	ROCA	ROCA	ROCA	BASA	ROCA	SAEX	BASA
4	BAPI	BAPI	BAPI	BAPI	ROCA	ROCA	ROCA	SAEX	ROCA	BAPI	RUUR	BASA	ROCA	ROCA	RJUR
5	ROCA	BAPI	SAME	BAPI	BAPI	ROCA	BAPI	ROCA	BAPI	BAPI	RUUR	BASA	SALA	ROCA	RJUR
6	ROCA	ROCA	SAME	SAME	BAPI	BAPI	BAPI	ROCA	BAPI	SAME	BASA	SAME	SALA	BAPI	SAME
7	ROCA	ROCA	SAME	SAME	SAME	BAPI	SAME	BAPI	SAME	SAME	BASA	SAME	CEOC	BAPI	SAME
8	BAPI	ROCA	SAME	SAME	SAME	SAME	SAME	BAPI	SAME	SAME	CEOC	SAME	CEOC	SAME	SAME
9	BAPI	BAPI	CEOC	SAME	SAME	SAME	SAME	SAME	SAME	SAME	CEOC	ROCA	SAME	SAME	ROCA
10	SALA	BAPI	CEOC	CEOC	SAME	SAME	SAME	SAME	SAME	CEOC	SALA	ROCA	SAME	SAME	ROCA
11	SALA	SALA	SALA	CEOC	CEOC	SAME	CEOC	SAME	CEOC	CEOC	SALA	BALA	SAME	SAME	BAPI
12	SALA	SALA	SALA	SALA	CEOC	CEOC	CEOC	SAME	CEOC		ROCA	SAEX	SAME	CEOC	BAPI
13	ROCA	SALA	SAME	SALA	SAME	CEOC		CEOC			ROCA	BAPI	BAPI	CEOC	SAME
14	ROCA	ROCA	SAME	SAME	SAME	SAME		CEOC		SAME	SAME	SAEX	BAPI	SALA	SAME
15	ROCA	ROCA	SAME	SAME	SAME	SAME	SAME	SAME	SAME	SAME	SAME	SAME	SAME		SAME
16	BASA	ROCA	SAME	SAME	SAME	SALA	SAME	SAME	SAME	SAME	SAME	SAME	SAME	SAME	SAME
17	BASA	BASA	ROCA	SAME	SALA	SALA	SAME	SAME	SAME	SAME	SAME	SAME	SAME	SAME	ROCA
18	ROCA	BASA	ROCA	ROCA	SALA	SAME	SAME	SAME	SAME	ROCA	SAME	SAME	SAME	SAME	ROCA
19	ROCA	ROCA	SAME	ROCA	RUUR	SAME	ROCA	ROCA	ROCA	ROCA	SAME	RUUR	ROCA	SAME	SALA
20	BAPI	ROCA	SAME	SAME	RUUR	ROCA	ROCA	ROCA	ROCA	SAME	SAME	RUUR	ROCA	ROCA	SALA
21	BAPI	BAPI	SAME	SAME	SAME	RUUR	SAME	SAME	SAME	SAME	BASA	BAPI	SAME	ROCA	BAPI
22	BAPI	BAPI	SAME	SAME	SAME	SAME	SAME	SAME	SAME	SAME	BASA	BAPI	SAME	SAME	BAPI
23	SAEX	BAPI	BASA	SAME	SAME	SAME	SAME	SAME	SAME	SAME	BASA	ROCA	SAME	SAME	SAME
24	SAEX	SAEX	BASA	BASA	SAME	SAME	SAME	BAPI	SAME	BASA	RUUR	ROCA	SAME	SAME	SAME
25	ROCA	SAEX	BASA	BASA	BASA	SAME	BASA	BAPI	BASA	BASA	RUUR	SAME		SAME	SAME
26	ROCA	ROCA	RUUR	BASA	BASA	BASA	BASA	ROCA	BASA	BASA	SAME	SAME			SAME
27	BAPI	ROCA	RUUR	RUUR	BASA	BASA	BASA	ROCA	BASA	RUUR	SAME	SAME	BASA	BASA	RJUR
28	BAPI	BAPI	SAME	RUUR	RUUR	BASA	RUUR	SAME	RUUR	RUUR	SAME	SAME	RUUR	BASA	RJUR
29	BASA	BAPI	SAME	SAME	RUUR	RUUR	RUUR	SAME	RUUR	SAME	SAME	SAME	RUUR	RUUR	BAPI
30	BASA	BASA	SAME	SAME	SAME	RUUR	SAME	SAME	SAME	SAME	BASA	CEOC	SAME	RUUR	BAPI
31	BASA	BASA	ROCA	SAME	SAME	SAME	SAME	SALA	SAME	SAME	BASA	CEOC	SAME	SAME	ROCA
32	ROCA	BASA	ROCA	ROCA	SAME	SAME	SAME	SALA	SAME	ROCA	ROCA	RUUR	SAME	SAME	ROCA
33	ROCA	ROCA	BAPI	ROCA	ROCA	SAME	ROCA	BASA	ROCA	ROCA	ROCA	RUUR	ROCA	SAME	SAME
34	CEOC	ROCA	BAPI	BAPI	ROCA	ROCA	ROCA	BASA	ROCA	BAPI	BASA	SAME	ROCA	ROCA	SAME
35	CEOC	CEOC	SAME	BAPI	BAPI	ROCA	BAPI	BASA	BAPI	BAPI	BASA	SAME	BAPI	ROCA	SAME
36	CEOC	CEOC	SAME	SAME	BAPI	BAPI	BAPI	RUUR	BAPI	SAME	CEOC	SAME	BAPI	BAPI	SAME
37	ROCA	CEOC	SAME	SAME	SAME	BAPI	SAME	RUUR	SAME	SAME	CEOC	SAME	SAME	BAPI	CEOC
38	ROCA	ROCA	SAME	SAME	SAME	SAME	SAME	SAME	SAME	SAME	SAME	BASA	SAME	SAME	CEOC
39	BAPI	ROCA	ROCA	SAME	SAME	SAME	SAME	SAME	SAME	SAME	SAME	BASA	SAME	SAME	RUUR
40	BAPI	BAPI	ROCA	ROCA	SAME	SAME	SAME	SAME	SAME	ROCA	SAME	ROCA	SAME	SAME	RUUR
41	ROCA	BAPI	SALA	ROCA	ROCA	SAME	ROCA	SAME	ROCA	ROCA	ROCA	ROCA	ROCA	SAME	SAME
42	ROCA	ROCA	SALA	SALA	ROCA	ROCA	ROCA	ROCA	ROCA	SALA	ROCA	SAEX	ROCA	ROCA	SAME
43	ROCA	ROCA	BAPI	SALA	SALA	ROCA	SALA	ROCA	SALA	SALA	SALA	SAEX	SALA	ROCA	SAME
44	BAPI	ROCA	BAPI	BAPI	SALA	SALA	SALA	SALA	SALA	BAPI	SALA	ROCA	SALA	SALA	SAME
45	BAPI	BAPI	SAME	BAPI	BAPI	SALA	BAPI	SALA	BAPI	BAPI	SALA	ROCA	BAPI	SALA	BASA
46	SALA	BAPI	SAME	SAME	BAPI	BAPI	BAPI	BAPI	BAPI	SAME	BASA	BAPI	BAPI	BAPI	BASA
47	SALA	SALA	SAME	SAME	SAME	BAPI	SAME	BAPI	SAME	SAME	BASA	BAPI	SAME	BAPI	ROCA
48	SALA	SALA	SAME	SAME	SAME	SAME	SAME	SAME	SAME	SAME	BASA	SAME	SAME	SAME	ROCA
49	ROCA	SALA	RUUR	SAME	SAME	SAME	SAME	SAME	SAME	SAME	RUUR	SAME	SAME	SAME	SAEX
50	ROCA	ROCA	RUUR	RUUR	SAME	RUUR	SAME	SAME	SAME	RUUR	RUUR	SAME	SAME	SAME	SAEX

Plant Flag Code	Common Name	Scientific Name	Project Totals
BAPI	coyote brush	*Baccharis pilularis*	524
BASA	mule fat	*Baccharis salicifolia*	358
CEOC	bottun bush	*Cepholanthus occidentalis*	222
ROCA	California rose	*Rosa californica*	791
RUUR	California blackberry	*Rubus ursinus*	316
SAEX	sandbar willow	*Salix exigua*	137
SALA	arroyo willow	*Salix lasiolepis*	225
SAME	blue elderberry	*Sambucus mexicana*	1,475
		Total	4,048

0 75 150 300

PREPARED BY: RESTORATION RESOURCES

APPENDIX A
SHEET 3 OF 3

CLIENT: Levee District No. 1

SHEET TITLE: STAR BEND PHASE 1 HABITAT ENHANCEMENT
As-Built Records
SAMPLE PLANTING MATRIX

NORTH

SCALE

SHEET NO. L1.3

3 of 3

Appendix B
Photo Documentation

Elderberry Transplants SB-01 and SB-02; June 30, 2010.

Elderberry Transplants SB-03 and SB-04; June 30, 2010.

Elderberry Transplants SB-05 and SB-06; June 30, 2010.

Elderberry Transplants SB-07 and SB-08; June 30, 2010.

Elderberry Transplants SB-09 and SB-10; June 30, 2010.

Elderberry Transplants SB-11 and 12; June 30, 2010.

Elderberry Transplants SB-13 and SB-14; June 30, 2010.

Elderberry Transplants SB-15 and SB-16; June 30, 2010.

Elderberry Transplants SB-17 and SB-18; June 30, 2010.

Elderberry Transplants SB-19 and SB-20; June 30, 2010.

Elderberry Transplants SB-21 and SB-22; June 30, 2010.

Elderberry Transplants SB-23 and SB-24; June 30, 2010.

Elderberry Transplants SB-25 and SB-26; June 30, 2010.

Elderberry Transplants SB-27 and SB-28; June 30, 2010.

Elderberry Transplants SB-29 and SB-30; June 30, 2010.

Elderberry Transplants SB-31 and SB-32; June 30, 2010.

Elderberry Transplants SB-33 and SB-34; June 30, 2010.

Elderberry Transplants SB-35 and SB-36; June 30, 2010.

Elderberry Transplant SB-37; Potential VELB exit hole on elderberry transplant SB-37; June 30, 2010.

Potential VELB exit hole on elderberry transplant SB-37; Installed blue elderberry (*Sambucus mexicana*); June 30, 2010.

Installed coyote brush (*Baccharis pilularis*) and mule fat (*Baccharis salicifolia*); June 30, 2010.

Installed California rose (*Rosa californica*) and California blackberry (*Rubus ursinus*); June 30, 2010.

Installed arroyo willow (*Salix lasiolepis*) and sandbar willow (*Salix exigua*); June 30, 2010.

Installed buttonbush (*Cepholanthus occidentalis*) and VELB habitat protection sign; June 30, 2010.

United States Department of the Interior

FISH AND WILDLIFE SERVICE
Sacramento Fish and Wildlife Office
2800 Cottage Way, Room W-2605
Sacramento, California 95825-1846

In reply refer to:
81420-2009-F-0372-1

FEB 6 2009

Frank Piccola
Chief, Planning Division
U.S. Army Corps of Engineers
1325 J Street, Room 1480
Sacramento, California 95814

Subject: Review of the Feather River Levee Setback and Habitat Enhancement Project at Star Bend, Sutter County, California, for Inclusion with the *Programmatic Formal Consultation Permitting Projects with Relatively Small Effects on the Valley Elderberry Longhorn Beetle Within the Jurisdiction of the Sacramento Field Office* (Corps File No. 199600065, Service File No. 1-1-96-F-66)

Dear Mr. Piccola:

This letter is in response to your January 29, 2009, letter requesting to initiate formal consultation for the Feather River Levee Setback and Habitat Enhancement Project at Star Bend, Sutter County, California (project). The U.S. Fish and Wildlife Service (Service) received your request on January 29, 2009. At issue are the effects of the project on the federally-listed as threatened valley elderberry longhorn beetle (*Desmocerus californicus dimorphus)* (beetle). The project is not located in proposed or designated critical habitat for any federally-listed species; therefore, no critical habitat would be affected. This response is in accordance with section 7 of the Endangered Species Act of 1973, as amended (16 U.S.C. 1531 *et seq.*).

The Service has determined that it is appropriate to append the proposed project to the September 19, 1996, *Programmatic Formal Consultation Permitting Projects with Relatively Small Effects on the Valley Elderberry Longhorn Beetle Within the Jurisdiction of the Sacramento Field Office* (1-1-96-F-66) (Programmatic Consultation).

This consultation is based on the following: (1) Stillwater Sciences July 2008, draft Biological Assessment; (2) the Corps' January 29, 2009, letter requesting initiation of section 7 consultation; (3) email and phone conservations between Jennifer Hobbs of the Service and John Suazo of the Corps; and (4) other information available to the Service.

TAKE PRIDE IN AMERICA

BIOLOGICAL OPINION

Project Description

The project would construct a setback levee on the west bank of the Feather River at Star Bend to replace portions of the existing levee that currently exhibit seepage and underseepage problems, constrict the channel, and present an unacceptably high risk for levee failure. Construction of the setback levee would reduce channel constriction at Star Bend, which would substantially reduce the risk of failure of the levee at Star Bend. The proposed setback levee would be consistent with local and state flood control objectives, including reducing the risk of flooding in Sutter and Yuba counties.

Native riparian and floodplain habitat would be restored within the O'Connor Lakes unit of the California Department of Fish and Game's (CDFG) Feather River Wildlife Area and the setback levee would connect O'Connor Lakes unit with the Abbott Lake unit. Borrow/spoil sites within O'Connor Lakes unit will be filled and revegetated. As part of the project about 50 acres of new floodplain will be created and Levee District (LD) 1 will revegetate 20 acres for habitat enhancement. The remaining acreage will be hydroseeded with native herbaceous plant species. Borrow/spoil sites at the O'Connor Lakes unit will be hydroseeded with native herbaceous plant species.

Nine elderberry shrubs (*Sambucus* sp.) would be transplanted due to construction of the setback levee. These shrubs would be transplanted to the area within the new setback that will be revegetated with riparian species including elderberry shrubs. Elderberries present within the O'Connor Lakes unit will be avoided by at least a 20 foot buffer. Work around all but 3 elderberry shrubs shall not occur within 100 feet during the beetles' flight season (March 15 to June 15). Additional elderberry and riparian plantings will be done within the restoration area to compensate for working up to 20 feet from elderberry shrubs located along the proposed haul route between March 15 and June 15. These shrubs will be fenced, a speed limit of 5 miles per hour will be enforced when vehicles are within 100 feet of the three shrubs during the flight season, and dust suppression measures as described in the environmental assessment.

On September 9, 2005, the Service signed a biological opinion (1-1-05-F-0016) on the Memorandum of Understanding between the Service, CDFG, and California Department of Parks and Recreation. The project description allows for the restoration of 228 acres of the O'Connor Lakes unit to include 1,366 elderberry seedlings. Because LD 1 and the California Department of Water Resources (DWR) need to maintain flood capacity within this section of the Feather River, an agreement was made which allows either entity to transplant any elderberries which are an impediment to flood control and/or maintenance activities. Elderberry shrubs numbers 8 and 9 are located within the O'Connor Lakes unit in an area that may be used as borrow for the flood control project. Therefore, if elderberry shrubs numbers 8 and 9 need to be transplanted as part of this project, any incidental take associated with the transplantation of these shrubs was covered in the September 9, 2005, biological opinion.

Proposed Conservation Measures for the Valley Elderberry Longhorn Beetle

The Corps has proposed to compensate for effects to 9 elderberry shrubs by creating 20 acres of valley elderberry longhorn beetle habitat within the new setback area. Table 1 shows the stems that would be affected by transplantation. The project will include planting an additional 5 acres of valley elderberry longhorn beetle habitat to compensate for working during the flight season of three shrubs within the O'Connor Lakes unit. This project will increase the extent, connectivity, and quality of riparian habitat along the Feather River. Upon completion of construction DWR will annex the land to CDFG to become part of their Feather River Wildlife Area and ensure that maintenance and monitoring of the valley elderberry longhorn beetle compensation site is completed.

Table 1: Description of elderberry shrub indirectly affected and proposed compensation.

Stem size	Number of Stems	Exit hole	Seedling ratio	Number of replacement elderberries	Assoc. native ratios	Number of assoc. seedlings	Required acreage
1"-3"	201	Yes	4:1	804	2:1	1608	
3" -5"	50	Yes	6:1	300	2:1	600	
> 5"	1	No	4:1	4	1:1	4	
> 5"	12	Yes	8:1	96	2:1	192	
Total	**264**			**1204**		**2404**	**14.9**

This concludes the Service's review of the Feather River Levee Setback and Habitat Enhancement Project at Star Bend. As provided in 50 CFR 402.16, re-initiation of formal consultation is required where discretionary Federal agency involvement or control over the action has been maintained (or is authorized by law) and if: (1) the amount or extent of incidental take is exceeded; (2) new information reveals effects of the agency action that may affect listed species or critical habitat in a manner or to an extent not considered in this opinion; (3) the agency action is subsequently modified in a manner that causes an effect to the listed species or critical habitat that was not considered in this opinion; or (4) a new species is listed or critical habitat designated that may be affected by the action. In instances where the amount or extent of incidental take is exceeded, any operation causing such take must cease pending reinitiation.

If you have any questions regarding this biological opinion for Feather River Levee Setback and Habitat Enhancement Project at Star Bend, please contact Jennifer Hobbs, of my staff at (916) 414-6645.

Sincerely,

Peter A. Gross

for Kenneth D. Sanchez
Assistant Field Supervisor

cc:
John Suazo, Corps of Engineers, Sacramento, California
Zooey Diggory, Stillwater Sciences, Santa Cruz, California

United States Department of the Interior

Fish and Wildlife Service

Sacramento Fish and Wildlife Office
2800 Cottage Way, Room W-2605
Sacramento, California 95825

Conservation Guidelines for the Valley Elderberry Longhorn Beetle

Revised July 9, 1999

The following guidelines have been issued by the U.S. Fish and Wildlife Service (Service) to assist Federal agencies and non-federal project applicants needing incidental take authorization through a section 7 consultation or a section 10(a)(1)(B) permit in developing measures to avoid and minimize adverse effects on the valley elderberry longhorn beetle. The Service will revise these guidelines as needed in the future. The most recently issued version of these guidelines should be used in developing all projects and habitat restoration plans. The survey and monitoring procedures described below are designed to avoid any adverse effects to the valley elderberry longhorn beetle. Thus a recovery permit is not needed to survey for the beetle or its habitat or to monitor conservation areas. If you are interested in a recovery permit for research purposes please call the Service's Regional Office at (503) 231-2063.

Background Information

The valley elderberry longhorn beetle (*Desmocerus californicus dimorphus*), was listed as a threatened species on August 8, 1980 (Federal Register 45: 52803-52807). This animal is fully protected under the Endangered Species Act of 1973, as amended (16 U.S.C. 1531 et seq.). The valley elderberry longhorn beetle (beetle) is completely dependent on its host plant, elderberry (Sambucus species), which is a common component of the remaining riparian forests and adjacent upland habitats of California's Central Valley. Use of the elderberry by the beetle, a wood borer, is rarely apparent. Frequently, the only exterior evidence of the elderberry's use by the beetle is an exit hole created by the larva just prior to the pupal stage. The life cycle takes one or two years to complete. The animal spends most of its life in the larval stage, living within the stems of an elderberry plant. Adult emergence is from late March through June, about the same time the elderberry produces flowers. The adult stage is short-lived. Further information on the life history, ecology, behavior, and distribution of the beetle can be found in a report by Barr (1991) and the recovery plan for the beetle (USFWS 1984).

Surveys

Proposed project sites within the range of the valley elderberry longhorn beetle should be surveyed for the presence of the beetle and its elderberry host plant by a qualified biologist. The beetle's range extends throughout California's Central Valley and associated foothills from about the 3,000-foot elevation contour on the east and the watershed of the Central Valley on the west (Figure 1). All or portions of 31 counties are included: Alameda, Amador, Butte, Calaveras, Colusa, Contra Costa, El Dorado, Fresno, Glenn, Kern, Kings, Lake, Madera, Mariposa, Merced, Napa, Nevada, Placer, Sacramento, San Benito, San Joaquin, San Luis Obispo, Shasta, Solano, Stanislaus, Sutter, Tehama, Tulare, Tuolumne, Yolo, Yuba.

If elderberry plants with one or more stems measuring 1.0 inch or greater in diameter at ground level occur on or adjacent to the proposed project site, or are otherwise located where they may be directly or indirectly affected by the proposed action, minimization measures which include planting replacement habitat (conservation planting) are required (Table 1).

All elderberry shrubs with one or more stems measuring 1.0 inch or greater in diameter at ground level that occur on or adjacent to a proposed project site must be thoroughly searched

for beetle exit holes (external evidence of beetle presence). In addition, all elderberry stems one inch or greater in diameter at ground level must be tallied by diameter size class (Table 1). As outlined in Table 1, the numbers of elderberry seedlings/cuttings and associated riparian native trees/shrubs to be planted as replacement habitat are determined by stem size class of affected elderberry shrubs, presence or absence of exit holes, and whether a proposed project lies in a riparian or non-riparian area.

Elderberry plants with no stems measuring 1.0 inch or greater in diameter at ground level are unlikely to be habitat for the beetle because of their small size and/or immaturity. Therefore, no minimization measures are required for removal of elderberry plants with no stems measuring 1.0 inch or greater in diameter at ground level with no exit holes. Surveys are valid for a period of two years.

Avoid and Protect Habitat Whenever Possible

Project sites that do not contain beetle habitat are preferred. If suitable habitat for the beetle occurs on the project site, or within close proximity where beetles will be affected by the project, these areas must be designated as avoidance areas and must be protected from disturbance during the construction and operation of the project. When possible, projects should be designed such that avoidance areas are connected with adjacent habitat to prevent fragmentation and isolation of beetle populations. Any beetle habitat that cannot be avoided as described below should be considered impacted and appropriate minimization measures should be proposed as described below.

Avoidance: Establishment and Maintenance of a Buffer Zone

Complete avoidance (i.e., no adverse effects) may be assumed when a 100-foot (or wider) buffer is established and maintained around elderberry plants containing stems measuring 1.0 inch or greater in diameter at ground level. Firebreaks may not be included in the buffer zone. In buffer areas construction-related disturbance should be minimized, and any damaged area should be promptly restored following construction. The Service must be consulted before any disturbances within the buffer area are considered. In addition, the Service must be provided with a map identifying the avoidance area and written details describing avoidance measures.

Protective Measures

1. Fence and flag all areas to be avoided during construction activities. In areas where encroachment on the 100-foot buffer has been approved by the Service, provide a minimum setback of at least 20 feet from the dripline of each elderberry plant.

2. Brief contractors on the need to avoid damaging the elderberry plants and the possible penalties for not complying with these requirements.

3. Erect signs every 50 feet along the edge of the avoidance area with the following information: "This area is habitat of the valley elderberry longhorn beetle, a threatened species, and must not be disturbed. This species is protected by the Endangered Species Act of 1973, as amended. Violators are subject to prosecution, fines, and imprisonment." The signs should be clearly readable from a distance of 20 feet, and must be maintained for the duration of construction.

4. Instruct work crews about the status of the beetle and the need to protect its elderberry host plant.

Restoration and Maintenance

Restore any damage done to the buffer area (area within 100 feet of elderberry

plants) during construction. Provide erosion control and re-vegetate with appropriate native plants.

Buffer areas must continue to be protected after construction from adverse effects of the project. Measures such as fencing, signs, weeding, and trash removal are usually appropriate.

No insecticides, herbicides, fertilizers, or other chemicals that might harm the beetle or its host plant should be used in the buffer areas, or within 100 feet of any elderberry plant with one or more stems measuring 1.0 inch or greater in diameter at ground level.

The applicant must provide a written description of how the buffer areas are to be restored, protected, and maintained after construction is completed.

Mowing of grasses/ground cover may occur from July through April to reduce fire hazard. No mowing should occur within five (5) feet of elderberry plant stems. Mowing must be done in a manner that avoids damaging plants (e.g., stripping away bark through careless use of mowing/trimming equipment).

Transplant Elderberry Plants That Cannot Be Avoided

Elderberry plants must be transplanted if they can not be avoided by the proposed project. All elderberry plants with one or more stems measuring 1.0 inch or greater in diameter at ground level must be transplanted to a conservation area (see below). At the Service's discretion, a plant that is unlikely to survive transplantation because of poor condition or location, or a plant that would be extremely difficult to move because of access problems, may be exempted from transplantation. In cases where transplantation is not possible the minimization ratios in Table 1 may be increased to offset the additional habitat loss.

Trimming of elderberry plants (e.g., pruning along roadways, bike paths, or trails) with one or more stems 1.0 inch or greater in diameter at ground level, may result in take of beetles. Therefore, trimming is subject to appropriate minimization measures as outlined in Table 1.

1. Monitor. A qualified biologist (monitor) must be on-site for the duration of the transplanting of the elderberry plants to insure that no unauthorized take of the valley elderberry longhorn beetle occurs. If unauthorized take occurs, the monitor must have the authority to stop work until corrective measures have been completed. The monitor must immediately report any unauthorized take of the beetle or its habitat to the Service and to the California Department of Fish and Game.

2. Timing. Transplant elderberry plants when the plants are dormant, approximately November through the first two weeks in February, after they have lost their leaves. Transplanting during the non-growing season will reduce shock to the plant and increase transplantation success.

3. Transplanting Procedure.

a. Cut the plant back 3 to 6 feet from the ground or to 50 percent of its height (whichever is taller) by removing branches and stems above this height. The trunk and all stems measuring 1.0 inch or greater in diameter at ground level should be replanted. Any leaves remaining on the plant should be removed.

b. Excavate a hole of adequate size to receive the transplant.

c. Excavate the plant using a Vemeer spade, backhoe, front end

loader, or other suitable equipment, taking as much of the root ball as possible, and replant immediately at the conservation area. Move the plant only by the root ball. If the plant is to be moved and transplanted off site, secure the root ball with wire and wrap it with burlap. Dampen the burlap with water, as necessary, to keep the root ball wet. Do not let the roots dry out. Care should be taken to ensure that the soil is not dislodged from around the roots of the transplant. If the site receiving the transplant does not have adequate soil moisture, pre-wet the soil a day or two before transplantation.

d. The planting area must be at least 1,800 square feet for each elderberry transplant. The root ball should be planted so that its top is level with the existing ground. Compact the soil sufficiently so that settlement does not occur. As many as five (5) additional elderberry plantings (cuttings or seedlings) and up to five (5) associated native species plantings (see below) may also be planted within the 1,800 square foot area with the transplant. The transplant and each new planting should have its own watering basin measuring at least three (3) feet in diameter. Watering basins should have a continuous berm measuring approximately eight (8) inches wide at the base and six (6) inches high.

e. Saturate the soil with water. Do not use fertilizers or other supplements or paint the tips of stems with pruning substances, as the effects of these compounds on the beetle are unknown.

f. Monitor to ascertain if additional watering is necessary. If the soil is sandy and well-drained, plants may need to be watered weekly or twice monthly. If the soil is clayey and poorly-drained, it may not be necessary to water after the initial saturation. However, most transplants require watering through the first summer. A drip watering system and timer is ideal. However, in situations where this is not possible, a water truck or other apparatus may be used.

Plant Additional Seedlings or Cuttings

Each elderberry stem measuring 1.0 inch or greater in diameter at ground level that is adversely affected (i.e., transplanted or destroyed) must be replaced, in the conservation area, with elderberry seedlings or cuttings at a ratio ranging from 1:1 to 8:1 (new plantings to affected stems). Minimization ratios are listed and explained in Table 1. Stock of either seedlings or cuttings should be obtained from local sources. Cuttings may be obtained from the plants to be transplanted if the project site is in the vicinity of the conservation area. If the Service determines that the elderberry plants on the proposed project site are unsuitable candidates for transplanting, the Service may allow the applicant to plant seedlings or cuttings at higher than the stated ratios in Table 1 for each elderberry plant that cannot be transplanted.

Plant Associated Native Species

Studies have found that the beetle is more abundant in dense native plant communities with a mature overstory and a mixed understory. Therefore, a mix of native plants associated with the elderberry plants at the project site or similar sites will be planted at ratios ranging from 1:1 to 2:1 [native tree/plant species to each elderberry seedling or cutting (see Table 1)]. These native plantings must be monitored with the same survival criteria used for the elderberry seedlings (see below). Stock of saplings, cuttings, and seedlings should be obtained from local sources. If the parent stock is obtained from a distance greater than one mile from the conservation area, approval by the Service of the native plant donor sites must be obtained prior to initiation of the revegetation work. Planting or seeding the conservation area with native herbaceous species is encouraged. Establishing native grasses and forbs may discourage unwanted non-native species from becoming established or persisting at the conservation area. Only stock from local sources

should be used.

Examples

Example 1

The project will adversely affect beetle habitat on a vacant lot on the land side of a river levee. This levee now separates beetle habitat on the vacant lot from extant Great Valley Mixed Riparian Forest (Holland 1986) adjacent to the river. However, it is clear that the beetle habitat located on the vacant lot was part of a more extensive mixed riparian forest ecosystem extending farther from the river's edge prior to agricultural development and levee construction. Therefore, the beetle habitat on site is considered riparian. A total of two elderberry plants with at least one stem measuring 1.0 inch or greater in diameter at ground level will be affected by the proposed action. The two plants have a total of 15 stems measuring over 1.0 inch. No exit holes were found on either plant. Ten of the stems are between 1.0 and 3.0 inches in diameter and five of the stems are greater than 5.0 inches in diameter. The conservation area is suited for riparian forest habitat. Associated natives adjacent to the conservation area are box elder (Acer negundo californica), walnut (Juglans californica var. hindsii), sycamore (Platanus racemosa), cottonwood (Populus fremontii), willow (Salix gooddingii and S. laevigata), white alder (Alnus rhombifolia), ash (Fraxinus latifolia), button willow (Cephalanthus occidentalis), and wild grape (Vitis californica).

Minimization (based on ratios in Table 1):

- Transplant the two elderberry plants that will be affected to the conservation area.

- Plant 40 elderberry rooted cuttings (10 affected stems compensated at 2:1 ratio and 5 affected stems compensated at 4:1 ratio, cuttings planted:stems affected)

- Plant 40 associated native species (ratio of associated natives to elderberry plantings is 1:1 in areas with no exit holes):

  5 saplings each of box elder, sycamore, and cottonwood

  5 willow seedlings

  5 white alder seedlings

  5 saplings each of walnut and ash

  3 California button willow

  2 wild grape vines

  Total: 40 associated native species

- Total area required is a minimum of 1,800 sq. ft. for one to five elderberry seedlings and up to 5 associated natives. Since, a total of 80 plants must be planted (40 elderberries and 40 associated natives), a total of 0.33 acre (14,400 square feet) will be required for conservation plantings. The conservation area will be seeded and planted with native grasses and forbs, and closely monitored and maintained throughout the monitoring period.

Example 2

The project will adversely affect beetle habitat in Blue Oak Woodland (Holland 1986). One elderberry plant with at least one stem measuring 1.0 inch or greater in diameter at ground level will be affected by the proposed action. The plant has a total of 10 stems measuring over 1.0 inch. Exit holes were found on the plant. Five of the stems are between 1.0 and 3.0 inches in diameter and five of the stems are between 3.0 and 5.0 inches in diameter. The conservation area is suited for elderberry savanna (non-riparian habitat). Associated natives adjacent to the conservation area are willow (Salix species), blue oak (Quercus douglasii), interior live oak (Q. wislizenii), sycamore, poison oak (Toxicodendron diversilobum), and wild grape.

Minimization (based on ratios in Table 1):

- Transplant the one elderberry plant that will be affected to the conservation area.

- Plant 30 elderberry seedlings (5 affected stems compensated at 2:1 ratio and 5 affected stems compensated at 4:1 ratio, cuttings planted:stems affected)

- Plant 60 associated native species (ratio of associated natives to elderberry plantings is 2:1 in areas with exit holes):

  20 saplings of blue oak, 20 saplings of sycamore, and 20 saplings of willow, and seed and plant with a mixture of native grasses and forbs

- Total area required is a minimum of 1,800 sq. ft. for one to five elderberry seedlings and up to 5 associated natives. Since, a total of 90 plants must be planted (30 elderberries and 60 associated natives), a total of 0.37 acre (16,200 square feet) will be required for conservation plantings. The conservation area will be seeded and planted with native grasses and forbs, and closely monitored and maintained throughout the monitoring period.

Conservation Area—Provide Habitat for the Beetle in Perpetuity

The conservation area is distinct from the avoidance area (though the two may adjoin), and serves to receive and protect the transplanted elderberry plants and the elderberry and other native plantings. The Service may accept proposals for off-site conservation areas where appropriate.

1. Size. The conservation area must provide at least 1,800 square feet for each transplanted elderberry plant. As many as 10 conservation plantings (i.e., elderberry cuttings or seedlings and/or associated native plants) may be planted within the 1800 square foot area with each transplanted elderberry. An additional 1,800 square feet shall be provided for every additional 10 conservation plants. Each planting should have its own watering basin measuring approximately three feet in diameter. Watering basins should be constructed with a continuous berm measuring approximately eight inches wide at the base and six inches high.

The planting density specified above is primarily for riparian forest habitats or other habitats with naturally dense cover. If the conservation area is an open habitat (i.e., elderberry savanna, oak woodland) more area may be needed for the required plantings. Contact the Service for assistance if the above planting recommendations are not appropriate for the proposed conservation area.

No area to be maintained as a firebreak may be counted as conservation area. Like the avoidance area, the conservation area should connect with adjacent habitat wherever possible, to prevent isolation of beetle populations.

Depending on adjacent land use, a buffer area may also be needed between the

conservation area and the adjacent lands. For example, herbicides and pesticides are often used on orchards or vineyards. These chemicals may drift or runoff onto the conservation area if an adequate buffer area is not provided.

2. Long-Term Protection. The conservation area must be protected in perpetuity as habitat for the valley elderberry longhorn beetle. A conservation easement or deed restrictions to protect the conservation area must be arranged. Conservation areas may be transferred to a resource agency or appropriate private organization for long-term management. The Service must be provided with a map and written details identifying the conservation area; and the applicant must receive approval from the Service that the conservation area is acceptable prior to initiating the conservation program. A true, recorded copy of the deed transfer, conservation easement, or deed restrictions protecting the conservation area in perpetuity must be provided to the Service before project implementation.

Adequate funds must be provided to ensure that the conservation area is managed in perpetuity. The applicant must dedicate an endowment fund for this purpose, and designate the party or entity that will be responsible for long-term management of the conservation area. The Service must be provided with written documentation that funding and management of the conservation area (items 3-8 above) will be provided in perpetuity.

3. Weed Control. Weeds and other plants that are not native to the conservation area must be removed at least once a year, or at the discretion of the Service and the California Department of Fish and Game. Mechanical means should be used; herbicides are prohibited unless approved by the Service.

4. Pesticide and Toxicant Control. Measures must be taken to insure that no pesticides, herbicides, fertilizers, or other chemical agents enter the conservation area. No spraying of these agents must be done within one 100 feet of the area, or if they have the potential to drift, flow, or be washed into the area in the opinion of biologists or law enforcement personnel from the Service or the California Department of Fish and Game.

5. Litter Control. No dumping of trash or other material may occur within the conservation area. Any trash or other foreign material found deposited within the conservation area must be removed within 10 working days of discovery.

6. Fencing. Permanent fencing must be placed completely around the conservation area to prevent unauthorized entry by off-road vehicles, equestrians, and other parties that might damage or destroy the habitat of the beetle, unless approved by the Service. The applicant must receive written approval from the Service that the fencing is acceptable prior to initiation of the conservation program. The fence must be maintained in perpetuity, and must be repaired/replaced within 10 working days if it is found to be damaged. Some conservation areas may be made available to the public for appropriate recreational and educational opportunities with written approval from the Service. In these cases appropriate fencing and signs informing the public of the beetle's threatened status and its natural history and ecology should be used and maintained in perpetuity.

7. Signs. A minimum of two prominent signs must be placed and maintained in perpetuity at the conservation area, unless otherwise approved by the Service. The signs should note that the site is habitat of the federally threatened valley elderberry longhorn beetle and, if appropriate, include information on the beetle's natural history and ecology. The signs must be approved by the Service. The signs must be repaired or replaced within 10 working days if they are found to be damaged or destroyed.

Monitoring

The population of valley elderberry longhorn beetles, the general condition of the conservation area, and the condition of the elderberry and associated native plantings in the conservation area must be monitored over a period of either ten (10) consecutive years or for seven (7) years over a 15-year period. The applicant may elect either 10 years of monitoring, with surveys and reports every year; or 15 years of monitoring, with surveys and reports on years 1, 2, 3, 5, 7, 10, and 15. The conservation plan provided by the applicant must state which monitoring schedule will be followed. No change in monitoring schedule will be accepted after the project is initiated. If conservation planting is done in stages (i.e., not all planting is implemented in the same time period), each stage of conservation planting will have a different start date for the required monitoring time.

Surveys. In any survey year, a minimum of two site visits between February 14 and June 30 of each year must be made by a qualified biologist. Surveys must include:

1. A population census of the adult beetles, including the number of beetles observed, their condition, behavior, and their precise locations. Visual counts must be used; mark-recapture or other methods involving handling or harassment must not be used.

2. A census of beetle exit holes in elderberry stems, noting their precise locations and estimated ages.

3. An evaluation of the elderberry plants and associated native plants on the site, and on the conservation area, if disjunct, including the number of plants, their size and condition.

4. An evaluation of the adequacy of the fencing, signs, and weed control efforts in the avoidance and conservation areas.

5. A general assessment of the habitat, including any real or potential threats to the beetle and its host plants, such as erosion, fire, excessive grazing, off-road vehicle use, vandalism, excessive weed growth, etc.

The materials and methods to be used in the monitoring studies must be reviewed and approved by the Service. All appropriate Federal permits must be obtained prior to initiating the field studies.

Reports. A written report, presenting and analyzing the data from the project monitoring, must be prepared by a qualified biologist in each of the years in which a monitoring survey is required. Copies of the report must be submitted by December 31 of the same year to the Service (Chief of Endangered Species, Sacramento Fish and Wildlife Office), and the Department of Fish and Game (Supervisor, Environmental Services, Department of Fish and Game, 1416 Ninth Street, Sacramento, California 95814; and Staff Zoologist, California Natural Diversity Data Base, Department of Fish and Game, 1220 S Street, Sacramento, California 95814). The report must explicitly address the status and progress of the transplanted and planted elderberry and associated native plants and trees, as well as any failings of the conservation plan and the steps taken to correct them. Any observations of beetles or fresh exit holes must be noted. Copies of original field notes, raw data, and photographs of the conservation area must be included with the report. A vicinity map of the site and maps showing where the individual adult beetles and exit holes were observed must be included. For the elderberry and associated native plants, the survival rate, condition, and size of the plants must be analyzed. Real and likely future threats must be addressed along with suggested remedies and preventative measures (e.g. limiting public access, more frequent removal of invasive non-native vegetation, etc.).

A copy of each monitoring report, along with the original field notes, photographs, correspondence, and all other pertinent material, should be deposited at the California Academy of Sciences (Librarian, California Academy of Sciences, Golden Gate Park, San Francisco, CA 94118) by December 31 of the year that monitoring is done and the report is prepared. The Service's Sacramento Fish and Wildlife Office should be provided with a copy of the receipt from

the Academy library acknowledging receipt of the material, or the library catalog number assigned to it.

Access. Biologists and law enforcement personnel from the California Department of Fish and Game and the Service must be given complete access to the project site to monitor transplanting activities. Personnel from both these agencies must be given complete access to the project and the conservation area to monitor the beetle and its habitat in perpetuity.

Success Criteria

A minimum survival rate of at least 60 percent of the elderberry plants and 60 percent of the associated native plants must be maintained throughout the monitoring period. Within one year of discovery that survival has dropped below 60 percent, the applicant must replace failed plantings to bring survival above this level. The Service will make any determination as to the applicant's replacement responsibilities arising from circumstances beyond its control, such as plants damaged or killed as a result of severe flooding or vandalism.

Service Contact

These guidelines were prepared by the Endangered Species Division of the Service's Sacramento Fish and Wildlife Office. If you have questions regarding these guidelines or to request a copy of the most recent guidelines, telephone (916) 414-6600, or write to:

U.S. Fish and Wildlife Service
Ecological Services
2800 Cottage Way, W-2605
Sacramento, CA 95825

Literature Cited

Barr, C. B. 1991. The distribution, habitat, and status of the valley elderberry longhorn beetle *Desmocerus californicus dimorphus*. U.S. Fish and Wildlife Service; Sacramento, California.

Holland, R.F. 1986. Preliminary descriptions of the terrestrial natural communities of California. Unpublished Report. State of California, The Resources Agency, Department of Fish and Game, Natural Heritage Division, Sacramento, California.

USFWS. 1980. Listing the valley elderberry longhorn beetle as a threatened species with critical habitat. Federal Register 45:52803-52807.

USFWS. 1984. Recovery plan for the valley elderberry longhorn beetle. U.S. Fish and Wildlife Service, Endangered Species Program; Portland, Oregon.

Table 1: Minimization ratios based on location (riparian vs. non-riparian), stem diameter of affected elderberry plants at ground level, and presence or absence of exit holes.

Location	Stems (maximum diameter at ground level)	Exit Holes on Shrub Y/N (quantify) [1]	Elderberry Seedling Ratio[2]	Associated Native Plant Ratio[3]
non-riparian	stems >=1" & =<3"	No:	1:1	1:1
		Yes:	2:1	2:1

non-riparian	stems >3" & <5"	No:	2:1	1:1
		Yes:	4:1	2:1
non-riparian	stems >=5"	No:	3:1	1:1
		Yes:	6:1	2:1
riparian	stems >=1" & <=3"	No:	2:1	1:1
		Yes:	4:1	2:1
riparian	stems > 3" & < 5"	No:	3:1	1:1
		Yes:	6:1	2:1
riparian	stems >=5"	No:	4:1	1:1
		Yes:	8:1	2:1

[1] All stems measuring one inch or greater in diameter at ground level on a single shrub are considered occupied when exit holes are present anywhere on the shrub.

[2] Ratios in the Elderberry Seedling Ratio column correspond to the number of cuttings or seedlings to be planted per elderberry stem (one inch or greater in diameter at ground level) affected by a project.

[3] Ratios in the Associated Native Plant Ratio column correspond to the number of associated native species to be planted per elderberry (seedling or cutting) planted.

Click for range map

Endangered Species Div., Sacramento Fish & Wildlife Office, U.S. Fish & Wildlife Service

United States Department of the Interior

FISH AND WILDLIFE SERVICE
Sacramento Fish and Wildlife Office
2800 Cottage Way, Room W-2605
Sacramento, California 95825-1846

In reply refer to:
1-1-05-F-0016

SEP 09 2005

To: Refuge Manager, Sacramento National Wildlife Refuge Complex
Willows, California

From: Acting Field Supervisor, Sacramento Fish and Wildlife Office
Sacramento, California

Subject: Intra-Agency Formal Consultation on the Memorandum of Understanding between the U.S. Fish and Wildlife Service, California Department of Fish and Game, and California Department of Parks and Recreation for Riparian Restoration and Management in Glenn, Tehama, Butte, and Colusa Counties, California

This document has been prepared in response to your October 8, 2004, request to initiate formal consultation with the U.S. Fish and Wildlife Service (Service) on the effects on federally-listed species from the proposed updating of the Memorandum of Understanding (MOU) between the Service, the California Department of Fish and Game (CDFG), and the California Department of Parks and Recreation (State Parks). The updating would include the addition of specific language covering limits of liabilities covered by the MOU. In addition, this biological opinion analyzes effects of projects that are covered by the MOU, including the Sacramento River and Feather River Wildlife Areas, and the O'Connor Lakes Unit Riparian Restoration Project (proposed project) within the Feather River Wildlife Area in Sutter County, California. At issue are adverse effects of the proposed project on the threatened valley elderberry longhorn beetle (*Desmocerus californicus dimorphus*) (beetle). Your request was received by the Sacramento Fish and Wildlife Office on October 8, 2004. This document is in accordance with section 7 of the Endangered Species Act of 1973, as amended (16 U.S.C. 1531 *et seq.*) (Act) and in accordance with the regulations governing intra-agency consultation (50 CFR §402).

This consultation is based on: (1) the October 8, 2004, draft *Memorandum of Understanding between the U.S. Fish and Wildlife Service Regarding the Sacramento River National Wildlife Refuge, the California Department of Fish and Game Regarding the Sacramento River Wildlife Area and Feather River Wildlife Area, and the California Department of Parks and Recreation, Northern Buttes District, regarding the Sacramento River State Parks*; (2) the August 18, 2004, draft *O'Connor Lakes Unit Riparian Restoration Plan, Feather River Wildlife Area, Sutter County, California*, prepared by River Partners for the CDFG; (3) the July 2004 *Hydraulic*

TAKE PRIDE IN AMERICA

Analysis of the O'Connor Lakes Restoration Project, prepared by MBK Engineers; (4) the December 13, 2004, *O'Connor Lakes Unit of the Feather River Wildlife Area Elderberry Shrub Survey*, prepared by CDFG; (5) the December 9, 2004, and January 19, 2005, electronic mail correspondences from Michele Ng of the California Department of Water Resources (DWR) to Rick Kuyper of the Service regarding proposed conservation measures and maintenance activities; (6) the 2004 *Description of Proposed Work, Riparian Restoration Project, Feather River Wildlife Area, O'Connor Lakes Unit*, prepared by River Partners; (7) elderberry shrub survey information from the O'Connor Lakes area provided by CDFG to the Service on January 11, 2005; (8) the April 13, 2005, electronic mail correspondence from Armand Gonzales of CDFG to Rick Kuyper of the Service regarding the proposed project description and comments from DWR, the Reclamation Board, and River Partners; (9) the June 2005 *Hydraulic Analysis of the O'Connor Lakes Restoration Project*, prepared by MBK Engineers; (10) the August 30, 2005, electronic mail correspondence from Michele Ng of DWR to Rick Kuyper of the Service which provided final comments regarding the draft biological opinion and a request for the Service to issue the biological opinion; and (10) other information available to the Service.

Based on our analysis, the Service has determined the proposed project will result in the establishment of a significant amount of habitat for the valley elderberry longhorn beetle that will be of long-term benefit to this listed animal, and any adverse effects will be temporary and relatively minor in nature.

Consultation History

October 8, 2004. The Service's Sacramento Office received the request for formal section 7 consultation from the Sacramento National Wildlife Refuge.

December 9, 2004. Michele Ng of DWR sent an electronic mail correspondence to Rick Kuyper of the Service regarding proposed maintenance activities for the proposed project.

January 11, 2005. A meeting was attended by Chris Nagano and Rick Kuyper of the Service, Michele Ng, Armand Gonzales and Dale Whitman of CDFG, and John Carlon of River Partners.

January 19, 2005. Michele Ng sent an electronic mail correspondence to Rick Kuyper regarding proposed conservation measures for the proposed project.

February 7, 2005. John Carlon provided the July 2004 *Hydraulic Analysis of the O'Connor Lakes Restoration Project* to the Service.

February 23, 2005. Rick Kuyper sent a draft copy of the project description via electronic mail correspondence to Armand Gonzales, Michele Ng, and John Carlon and requested comments and edits.

April 1 and April 8, 2005. Two meetings via telephone conference call was attended by Rick Kuyper, Armand Gonzales, Michele Ng, Stephen Bradley of the Reclamation Board, and John Carlon.

April 13, 2005. Armand Gonzales sent an electronic mail correspondence to Rick Kuyper with the compiled comments and edits of the project description from himself, Michele Ng, Stephen Bradley, and John Carlon.

May 16, 2005. Rick Kuyper sent a draft copy of the this biological opinion for review to Armand Gonzales, Michele Ng, Stephen Bradley, and John Carlon.

August 30, 2005. Michele Ng provided final comments on the draft biological opinion to Rick Kuyper and requested that the biological opinion be issued.

Project Description

Memorandum of Understanding

A memorandum of understanding (MOU) was issued in 2004 between the Service, CDFG, and State Parks regarding land management issues at selected locations including all lands owned and managed as the Sacramento River National Wildlife Refuge, Sacramento River Wildlife Area, Feather River Wildlife Area, and State Parks located along the Sacramento and Feather Rivers in Tehama, Butte, Glenn, Colusa Sutter and Yuba counties, California. The purpose of the MOU is to formally document an agreement to mutually manage, monitor, restore, and enhance lands managed for fish, wildlife, and plants along the Sacramento and Feather River, and to enhance communication between the agencies to prevent duplicating or prescribing conflicting land management and acquisition efforts. This BO applies to activities undertaken directly by the agencies that are signatories to the MOU and by their agents, that is, individuals, agencies, or organizations such as DWR and Levee District 1 that are engaged in site management or maintenance activities on behalf of and/or under the jurisdiction of one of the signatory agencies.

If this BO terminates, or if consultation related to this BO is reinitiated, DWR shall have the right to restore the site to baseline elderberry (*Sambucus* sp.) population reflective of pre-project conditions within one year of MOU termination or modification, or BO termination or reinitiation; 130 elderberry shrubs with stems greater than 1 inch in diameter that do not interfere with the flood conveyance capacity would be identified and allowed to remain. All other elderberries may be removed from the project site.

O'Connor Lakes Unit Restoration Project

The proposed 471-acre project site is located along the Feather River at river mile 18, approximately six miles south of Yuba City in Sutter County. It is directly south of the Star Bend section of the Feather River and north of the O'Connor Lakes section. The proposed project site is part of the Feather River Wildlife Area and is currently owned and managed by CDFG. Currently, there are approximately 130 elderberry shrubs (*Sambucus* sp.) within the

proposed project site. The majority of the shrubs are located along both sides of the road along the Feather River. Elderberry shrubs are the sole host plant for the beetle, and stems 1.0 inch or greater in diameter at ground level are required for the beetle to complete its life cycle.
The proposed-project site has been disturbed by human activities for the past 100 years, and currently contains large amounts of non-native and invasive plants. The CDFG has identified the site as a high priority for restoration because it would link two adjacent tracks of existing riparian habitat, thus creating a 2,142 acre-block of contiguous riparian habitat. The goals of the proposed project include: (1) the maintenance of general flood conveyance patterns across the proposed project site; (2) removal of existing non-native invasive plant species; (3) planting of appropriate native riparian vegetation using local seed sources; and (4) preservation of existing wildlife habitat.

Description of Proposed Maintenance and Routine Flood Control Maintenance Activities Within the Feather River Wildlife Area

Periodic maintenance is conducted by DWR on and adjacent to the site, in the Lake of the Woods and O 'Conner Lake Areas. In the Lake of the Woods area, routine maintenance consists of selectively clearing vegetation and debris in a 330 acre area. Maintenance is performed by hand crews in densely vegetated areas, and maintenance using heavy equipment is used to manage grasses, woody growth, shrubs, and select trees. Mowing is a preferred maintenance activity; however, periodically sites require leveling achieved through disking and/or dozing. Cleared areas are also sometimes sprayed as part of ongoing management. Non-native vegetation (e.g. giant reed, false bamboo, Chinese tallow, red sesbania, Spanish bloom, tree-of-heaven, black locust, tree tobacco, castor bean, pampas grass, eucalyptus, tamarisk, and acacia) would be removed. In all areas, routine maintenance includes removing vegetative material, living and dead, which interferes with the successful execution, functioning maintenance, or operation of the adopted plan of flood control. Floodwater conveyance capacity must meet the minimum flows specified in the U.S. Army Corps of Engineers (Corps) Operation and Maintenance Manual, which at this location is specified to be 300,000 cubic feet per second (cfs) with three feet of freeboard. Cleared trees, debris, brush, and trimmings are to be completely burned or removed from the floodway prior to flood season that extends from November 1 to April 15.

Routine maintenance in the O'Conner Lake area consists of clearing access and perimeter roads by clearing brush and small trees, and re-grading the roads. For the O'Connor Lakes area, a minimum 400-foot wide strip would be converted to and maintained as grasslands. This strip would be established parallel to the river as much as possible and would be cleared of woody vegetation to facilitate floodwater conveyance. Again, minimum conveyance capacity as specified in the Corps Operation and Maintenance Manual would be met as currently specified or as the Manual might be modified in the future, to protect public safety.

The Reclamation District performs levee maintenance, which includes mowing, cutting, burning, or spraying herbicides on weeds, grasses, shrubs and woody growth on levees as required to conduct levee safety inspections. Other maintenance activities include grading levee slopes to smooth surface irregularities, repair of the levee toe road, extermination of rodents (e.g. ground squirrels) burrowing in the levees, and filling of burrows with earthen materials or grout.

Description of Riparian Restoration of the O'Connor Lakes Unit

River Partners has identified a 228-acre portion of the proposed project area as an appropriate location for the planting of native riparian species, including elderberry shrubs. When elderberries are allowed by The Reclamation Board, elderberry shrubs would comprise 10 percent of the planted species composition. Elderberry shrubs would be planted at a density of 20 plants per acre, totaling approximately 1,366 planted elderberry shrubs within the 228-acre site. All of the woody trees and shrubs would be planted in rows that would be oriented approximately north-northwest to south-southeast, which would be parallel to flood flows. This orientation would serve to direct flood flows away from the west project levee. All rows would be spaced 20 feet apart.

The restoration area would be monitored and monitoring reports would be prepared by River Partners staff, who would make monthly activity reports throughout the year, and an annual quantitative survey would be performed between June and August. Towards the end of the growing season, monthly reports and the annual monitoring results would be summarized and reviewed at a meeting on the project site. Recommendations for changes in field management would be reported in a memo prepared at the end of the growing season. In addition, pre-and-post-planting photographs would be taken annually to provide qualitative information on vegetation changes at the restoration site. A final field report would be submitted to the Service in 2007.

Conservation Measures for the O'Connor Lakes Unit

The following measures would be taken by DWR to minimize adverse effects to the valley elderberry longhorn beetle during flood control and maintenance activities:

1. Prior to beginning maintenance work in an area where the beetle might occur, DWR maintenance supervisors and crews would be trained by a qualified biologist to identify and avoid harm to the species and its habitat.

2. Vegetation control through selective herbicide spraying in areas excluding levee slopes would be restricted to glycoposphate (Roundup) herbicide. The glycophosphate applications would occur only during appropriate weather conditions and with spray equipment that minimizes drift. Every effort would be made to insure that no glycophosphate herbicide is applied to elderberry shrub foliage.

3. Vegetation control under the dripline would be done using mowers and using hand crews July 1 through March 1.

4. Vegetation control using heavy equipment would occur up to the dripline of elderberry shrubs. Heavy equipment work would be further restricted to periods of dry weather, and DWR would suspend any ongoing maintenance work and would implement erosion control measures prior to any storm event to avoid adverse effects to elderberry shrubs.

5. Elderberry shrubs may be removed if they are located within the minimum 400-foot wide strip to be maintained free of woody vegetation needed to improve the hydraulic capacity of the area; or if the shrub interferes with flow and sediment transport, or flood control maintenance practices. Elderberry shrubs may also be removed if the floodwater conveyance capacity of the site falls below the minimum specified in the Corps Operation and Maintenance Manual as such manual exists on the date of this biological opinion or as it may be modified in the future to ensure public safety from flooding. In such cases, every effort would be made to implement recommendations from resource agency personnel regarding methods used to achieve public safety (adequate floodwater conveyance capacity) goals. The intent of this cooperation is to collaboratively address issues related to species recovery and public safety in a balanced fashion.

6. If transplanting an elderberry shrub becomes necessary because it is an impediment to flood control and/or maintenance activities, DWR would notify the Service and transplant the shrub(s) between November 1 and February 14. If removal of the shrub is required outside of these dates, it would be done in a manner to optimize survivorship of the shrub in consultation with the Service. In order to create dispersal corridors for the beetle, elderberry shrubs would be transplanted to a location that is within 50 feet of another elderberry shrub with stems measuring greater than 1.0 inch in diameter at ground level.

Status of the Species

The beetle was listed as a threatened species under the Act on August 8, 1980 (45 **FR** 52803). Critical habitat for the species was designated and published at 50 CFR §17.95. Two areas along the American River in the Sacramento metropolitan area have been designated as critical habitat for the beetle. Critical habitat for this species has been designated along the lower American River at Goethe and Ancil Hoffman parks (American River Parkway Zone) and at the Sacramento Zone, an area about a half mile from the American River downstream from the American River Parkway Zone. In addition, an area along Putah Creek, Solano County, and the area west of Nimbus Dam along the American River Parkway, Sacramento County, are considered essential habitat, according to the Valley Elderberry Longhorn Beetle Recovery Plan (Service 1984). These critical habitat and essential habitat areas within the American River parkway and Putah Creek support large numbers of mature elderberry shrubs with extensive evidence of use by the beetle.

The beetle is dependent on the elderberry, its host plant, which is a locally common component of the remaining riparian forests and savannah areas and, to a lesser extent, the mixed chaparral-foothill woodlands of the Central Valley. Use of the elderberry shrubs by the animal, a wood borer, is rarely apparent. In most cases, the only exterior evidence of the shrub's use by the beetle is an exit hole created by the larva just prior to the pupal stage. Observations made within elderberry shrubs along the Cosumnes River, in the Folsom Lake area, and near Blue Ravine in Folsom indicate that larval galleries can be found in elderberry stems with no evidence of exit holes; the larvae either succumb prior to constructing an exit hole or are not far enough along in

the developmental process to construct an exit hole. Beetle larvae appear to be distributed in stems which are 1.0 inch or greater in diameter at ground level. The Valley Elderberry Longhorn Beetle Recovery Plan (Service 1984) and Barr (1991) contain further details on the valley elderberry longhorn beetle's life history.

Population densities of the beetle are probably naturally low (Service 1984). It has been suggested, based on the spatial distribution of occupied shrubs (Barr 1991), that the beetle is a poor disperser (Collinge *et al.* 2001). Low density and limited dispersal capability cause the beetle to be vulnerable to the negative effects of the isolation of small subpopulations due to habitat fragmentation.

When the beetle was listed as threatened in 1980, the species was known from less than ten localities along the American River, the Merced River, and Putah Creek. By the time the Valley Elderberry Longhorn Beetle Recovery Plan was prepared in 1984, additional occupied localities had been found along the American River and Putah Creek. As of 2005, the California Natural Diversity Database (CNDDB 2005) contained 190 occurrences for this species in 44 drainages throughout the Central Valley, from a location along the Sacramento River in Shasta County, southward to an area along Caliente Creek in Kern County (CNDDB 2005). The beetle continues to be threatened by habitat loss and fragmentation, predation by the non-native Argentine ants (*Linepithema humile*) (Holway 1998; Huxel 2000; Huxel and Hastings 1999; Ward 1987), and possibly other factors such as pesticide drift, non-native plant invasion, improper burning regimes, off-road vehicle use, rip-rap bank protection projects, wood cutting, and over-grazing by livestock (CNDDB 2005).

Environmental Baseline

Riparian forests, the primary habitat for the beetle, have been severely depleted throughout the Central Valley over the last two centuries as a result of expansive agricultural and urban development (Katibah 1984; Roberts *et al.* 1977; Thompson 1961). Since colonization, these forests have been "...modified with a rapidity and completeness matched in few parts of the United States" (Thompson 1961). As of 1849, the rivers and larger streams of the Central Valley were largely undisturbed. They supported continuous bands of riparian woodland four to five miles in width along some major drainages such as the lower Sacramento River, and generally about two miles wide along the lesser streams (Thompson 1961). Most of the riverine floodplains supported riparian vegetation to about the 100-year flood line (Katibah 1984). A large human population influx occurred after 1849, however, and much of the Central Valley riparian habitat was rapidly converted to agriculture and used as a source of wood for fuel and construction to serve a wide area (Thompson 1961). By as early as 1868, riparian woodland had been severely affected in the Central Valley, as evidenced by the following excerpt:

> "This fine growth of timber which once graced our river [Sacramento], tempered the atmosphere, and gave protection to the adjoining plains from the sweeping winds, has entirely disappeared - the woodchopper's axe has stripped the river farms of nearly all the hard wood timber, and the owners are now obliged to rely upon the growth of willows for firewood" (Cronise 1868, in Thompson 1961).

The clearing of riparian forests for fuel and construction made land available for agriculture (Thompson 1977). Natural levees bordering the rivers, once supporting vast tracts of riparian habitat, became prime agricultural land (Thompson 1961). As agriculture expanded in the Central Valley, needs for increased water supply and flood protection spurred water development and reclamation projects. Artificial levees, river channelization, dam building, water diversion, and heavy groundwater pumping further reduced riparian habitat to small, isolated fragments (Katibah 1984). In recent decades, these riparian areas have continued to decline as a result of ongoing agricultural conversion as well and urban development and stream channelization. As of 1989, there were over 100 dams within the Central Valley drainage basin, as well as thousands of miles of water delivery canals and streambank flood control projects for irrigation, municipal and industrial water supplies, hydroelectic power, flood control, navigation, and recreation (Frayer *et al.* 1989). Riparian forests in the Central Valley have dwindled to discontinuous strips of widths currently measurable in yards rather than miles.

Some accounts state that the Sacramento Valley supported approximately 775,000 to 800,000 acres of riparian forest as of approximately 1848, just prior to statehood (Smith 1977; Katibah 1984). No comparable estimates are available for the San Joaquin Valley. Based on early soil maps, however, more than 921,000 acres of riparian habitat are believed to have been present throughout the Central Valley under pre-settlement conditions (Katibah 1984). Another source estimates that of approximately five million acres of wetlands in the Central Valley in the 1850s, approximately 1,600,000 acres were riparian wetlands (Warner and Hendrix 1985; Frayer *et al.* 1989).

Based on a California Department of Fish and Game riparian vegetation distribution map, by 1979, there were approximately 102,000 acres of riparian vegetation remaining in the Central Valley. This represents a decline in acreage of approximately 89 percent (Katibah 1984). More extreme figures were given by Frayer *et al.* (1989), who reported that woody riparian forests in the Central Valley had declined to 34,600 acres by the mid-1980s (from 65,400 acres in 1939). Although these studies have differing findings in terms of the number of acres lost (most likely explained by differing methodologies), they attest to a dramatic historic loss of riparian habitat in the Central Valley. As there is no reason to believe that riparian habitat suitable to the beetle (elderberry shrubs) would be destroyed at a different rate than other riparian habitat, we can assume that the rate of loss for beetle habitat in riparian areas has been equally dramatic.

A number of studies have focused on riparian vegetation losses along the Sacramento River, which supports some of the densest known populations of the beetle. Approximately 98 percent of the middle Sacramento River's historic riparian vegetation was believed to have been extirpated by 1977 (DWR 1979). The State Department of Water Resources estimated that native riparian habitat along the Sacramento River from Redding to Colusa decreased from

27,720 acres to 18,360 acres (34 percent) between 1952 and 1972 (McGill 1975; Conrad *et al.* 1977). The average rate of riparian loss on the middle Sacramento River was 430 acres per year from 1952 to 1972, and 410 acres per year from 1972 to 1977. In 1987, riparian areas as large as 180 acres were observed converted to orchards along this River (McCarten and Patterson 1987).

Barr (1991) examined 79 sites in the Central Valley supporting valley elderberry longhorn beetle habitat. When 72 of these sites were re-examined by researchers in 1997, seven no longer supported valley elderberry longhorn beetle habitat. This loss represents a decrease in the number of sites with valley elderberry longhorn beetle habitat by approximately nine percent in six years.

No comparable information exists on the historic loss of non-riparian valley elderberry longhorn beetle habitat such as elderberry savanna and other vegetation communities where elderberry shrubs also occur (oak or mixed chaparral-woodland, or grasslands adjacent to riparian habitat). However, all natural habitats throughout the Central Valley have been heavily adversely affected within the last 200 years (Thompson 1961), and we can therefore assume that non-riparian beetle habitat also has suffered a widespread decline. This analysis focuses on loss of riparian habitat because the beetle is primarily dependent upon riparian habitat. Adjacent upland areas are also likely to be important for the species, but this upland habitat typically consists of oak woodland or elderberry savanna bordering willow riparian habitat (Barr 1991). The riparian acreage figures given by Frayer *et al.* (1989) and Katibah (1984) included oak woodlands concentrated along major drainages in the Central Valley, and therefore probably included lands we would classify as upland habitat for the beetle adjacent to riparian drainages.

Between 1980 and 1995, the human population in the Central Valley grew by 50 percent, while the rest of California grew by 37 percent . The Central Valley's population was 4.7 million by 1999, and it is expected to more than double by 2040. The American Farmland Trust estimates that by 2040, more than 1 million cultivated acres will be lost and 2.5 million more put at risk (Ritter 2000). With this growing population in the Central Valley, increased development pressure is likely to result in continuing loss of riparian habitat.

While habitat loss is clearly a large factor leading to the species' decline, other factors are likely to pose significant threats to the long term survival of the beetle. Only approximately 20 percent of riparian sites with elderberry observed by Barr (1991) and Collinge *et al.* (2001) support beetle populations (Barr 1991, Collinge *et al.* 2001). Jones and Stokes (1988) found 65 percent of 4,800 riparian acres on the Sacramento River have evidence of beetle presence. The fact that a large percentage of apparently suitable habitat is unoccupied suggests that the beetle is limited by factors other than habitat availability, such as habitat quality or limited dispersal ability.

Destruction of riparian habitat in central California has resulted not only in a significant acreage loss, but also has resulted in beetle habitat fragmentation. Fahrig (1997) states that habitat fragmentation is only important for habitats that have suffered greater than 80 percent loss. Riparian habitat in the Central Valley, which has experienced greater than 90 percent loss by most estimates, would meet this criterion as habitat vulnerable to effects of fragmentation.

Existing data suggests that beetle populations, specifically, are affected by habitat fragmentation. Barr (1991) found that small, isolated habitat remnants were less likely to be occupied by beetles than larger patches, indicating that valley elderberry longhorn beetle subpopulations are extirpated from small habitat fragments. Barr (1991) and Collinge *et al.* (2001) consistently found valley elderberry longhorn beetle exit holes occurring in clumps of elderberry bushes rather than isolated bushes, suggesting that isolated shrubs do not typically provide long-term viable habitat for this species. Local populations of organisms often undergo periodic colonization and extinction, while the metapopulation (set of spatially separated groups of a species) may persist (Collinge 1996).

Habitat fragmentation can be an important factor contributing to species declines because: (1) it divides a large population into two or more small populations that become more vulnerable to direct loss, inbreeding depression, genetic drift, and other problems associated with small populations; (2) it limits a species' potential for dispersal and colonization; and (3) it makes habitat more vulnerable to outside influences by increasing the edge:interior ratio (Primack 1998).

Small, isolated subpopulations are susceptible to extirpation from random demographic, environmental, and/or genetic events (Shaffer 1981; Lande 1988; Lande 1993; Primack 1998). While a large area may support a single large population, the smaller subpopulations that result from habitat fragmentation may not be large enough to persist over a long time period. As a population becomes smaller, it tends to lose genetic variability through genetic drift, leading to inbreeding depression and a lack of adaptive flexibility. Smaller populations also become more vulnerable to random fluctuations in reproductive and mortality rates, and are more likely to be extirpated by random environmental factors.

The beetle is a specialist on elderberry plants, and tends to have small population sizes and occurs in low densities (Barr 1991; Collinge *et al.* 2001). Collinge *et al.* (2001) compared resource use and density of exit holes between the beetle and a related subspecies, the California elderberry longhorn beetle (*Desmocerus californicus californicus*). The valley elderberry longhorn beetle tended to occur in areas with higher elderberry densities, but had lower exit hole densities than the California elderberry longhorn beetle. With extensive riparian habitat loss and fragmentation, these naturally-small valley elderberry longhorn beetle populations are broken into even smaller, isolated populations. Once a small valley elderberry longhorn beetle population has been extirpated from an isolated habitat patch, the species may be unable to re-colonize this patch if it is unable to disperse from nearby occupied habitat. Insects with limited dispersal and colonization abilities may persist better in large habitat patches than small patches because small fragments may be insufficient to maintain viable populations and the insects may be unable to disperse to more suitable habitat (Collinge 1996).

Studies suggest that the beetle is unable to re-colonize drainages where the species has been extirpated, because of its limited dispersal ability (Barr 1991; Collinge *et al.* 2001). Huxel and Hastings (1999) used computer simulations of colonization and extinction patterns based on differing dispersal distances, and found that the short dispersal simulations best matched the 1997 census data in terms of site occupancy. This suggests that dispersal and colonization are

limited to nearby sites. At spatial scales greater than 6.2 miles, such as across drainages, valley elderberry longhorn beetle occupancy appears to be strongly influenced by regional extinction and colonization processes, and colonization is constrained by limited dispersal (Collinge *et al.* 2001; Huxel and Hastings 1999). Except for one occasion, drainages examined by Barr that were occupied in 1991 remained occupied in 1997 (Collinge *et al.* 2001; Huxel and Hastings 1999). The one exception was Stoney Creek, which was occupied in 1991 but not in 1997. All drainages found by Barr (1991) to be unoccupied in 1991 were also unoccupied in 1997. This data suggests that drainages unoccupied by the valley elderberry longhorn beetle remain so. Habitat fragmentation not only isolates small populations, but also increases the interface between habitat and urban or agricultural land, increasing negative edge effects such as the invasion of non-native species and pesticide contamination (Barr 1991). Several edge effect-related factors may be related to the decline of the valley elderberry longhorn beetle.

Evidence of the beetle in the form of exit holes have been found within the proposed action area. Elderberry shrubs with stems one inch or greater in diameter that provide suitable habitat are found in and adjacent to the action area. The action area contains components that can be used by the listed animal for feeding, resting, mating, and other essential behaviors. Therefore, the Service believes that the valley elderberry longhorn beetle is reasonably certain to occur within the action area because of the biology and ecology of the animal, the presence of suitable habitat in and adjacent to the action area, as well as recent evidence of this listed species.

Project-Related Effects to the Valley Elderberry Longhorn Beetle

The overall effect of this project will result in long-term beneficial effects to the valley elderberry longhorn beetle. The project will restore 228 acres of habitat for the imperiled animal. This addition of habitat in the area will benefit the listed beetle by increasing population numbers and improving the dispersal abilities of the species. The proposed project may result in short-term adverse effects to the valley elderberry longhorn beetle. Maintenance and operations activities and potential flood-fighting activities may remove elderberry shrubs from the proposed action area.

Indirect effects may occur if maintenance and flood-fighting activities alter the terrain, such as driplines, which may adversely affect elderberry bushes. Vehicles and construction equipment may leak hazardous substances such as motor oil and antifreeze. Although the quantity leaked by a given vehicle or engine may be minute, these substances can accumulate on roads or in parking lots and then get washed into the adjacent environment by runoff during rain storms. A variety of substances could be introduced during accidental spills of materials.

Based on our analysis, the Service has determined the proposed project will result in the establishment of a significant amount of habitat for the valley elderberry longhorn beetle that will be of long-term benefit to this listed animal, and any adverse effects will be temporary and relatively minor in nature.

Cumulative Effects

Cumulative effects include the effects of future State, tribal, local, or private actions that are reasonably certain to occur in the action area considered in this biological opinion. Future Federal actions that are unrelated to the proposed project are not considered in this section, because they require separate consultation pursuant to section 7 of the Act. An undetermined number of future land use conversions and routine agricultural practices are not subject to Federal authorization or funding and may alter the habitat or increase incidental take of the beetle and are, therefore, cumulative to the proposed project. Most of these future non-Federal projects are considered indirect effects of the proposed action and effects are addressed through an interim process of project approval and habitat conservation plan development.

Many activities affecting the beetle involve effects to elderberry shrubs located within riparian ecosystems adjoining or within jurisdictional wetlands. These projects will be evaluated via formal consultation between the Service and the Corps via the Federal nexus provided by section 404 of the Clean Water Act. However, a number of projects exist for which there is no need to discharge dredged or fill material into waters of the U.S. These projects, for which no section 404 permit is required, may lack a Federal nexus and thus, move forward absent formal consultation. These projects pose a significant threat to the recovery of the valley elderberry longhorn beetle. This loss of habitat negatively affects the environmental baseline and is difficult to quantify.

Conclusion

After reviewing the current status of the beetle, the environmental baseline for the action area, the effects of the proposed project, and the cumulative effects, it is the Service's biological opinion that the project, as proposed, is not likely to jeopardize the continued existence of the beetle. Critical habitat has been designated for the beetle. However, this action does not directly or indirectly affect these areas, and therefore, no destruction or adverse modification of critical habitat is anticipated.

Incidental Take Statement

Section 9(a)(1) of the Act and Federal regulation pursuant to section 4(d) of the Act prohibit the take of endangered and threatened fish and wildlife species, respectively, without special exemption. Take is defined as harass, harm, pursue, hunt, shoot, wound, kill, trap, capture or collect, or to attempt to engage in any such conduct. Harass is defined by the Service as an intentional or negligent act or omission which creates the likelihood of injury to a listed species by annoying it to such an extent as to significantly disrupt normal behavioral patterns which include, but are not limited to, breeding, feeding, or sheltering. Harm is defined by the Service to include significant habitat modification or degradation that results in death or injury to listed species by impairing behavioral patterns including breeding, feeding, or sheltering. Incidental take is defined as take that is incidental to, and not the purpose of, the carrying out of an

otherwise lawful activity. Under the terms of section 7(b)(4) and section 7(o)(2), taking that is incidental to and not intended as part of the agency action is not considered to be prohibited taking under the Act provided that such taking is in compliance with this Incidental Take Statement.

The measures described below are non-discretionary, and must be implemented by the Service so that they become binding conditions of any grant or permit issued to the applicant, as appropriate, in order for the exemption in section 7(o)(2) to apply. The Service has a continuing duty to regulate the activity covered by this incidental take statement. If the Service (1) fails to require the applicant to adhere to the terms and conditions of the incidental take statement through enforceable terms that are added to the permit or grant document, and/or (2) fails to retain oversight to ensure compliance with these terms and conditions, the protective coverage of section 7(o)(2) may lapse.

Amount or Extent of Take

The Service anticipates incidental take of the valley elderberry longhorn beetle will be difficult to detect or quantify. The cryptic nature of these species and their relatively small body size make the finding of a dead specimen unlikely. The species occur in habitats that make them difficult to detect. Due to the difficulty in quantifying the number of beetles that will be taken as a result of the proposed action, the Service is quantifying take in terms of the number of elderberry shrubs with stems one inch or greater in diameter that will become unsuitable for beetles due to direct or indirect effects as a result of the action. The Service anticipates that all valley elderberry longhorn beetles inhabiting elderberry bushes within the 471 acre project site will be taken as a result of the proposed project.

Upon implementation of the following reasonable and prudent measures, incidental take associated with the project on the listed valley elderberry longhorn beetle, in the form of harm, harassment, injury, or mortality from habitat loss or direct mortality will become exempt from the prohibitions described under section 9 of the Act for direct and indirect effects. In addition, incidental take in the form of harm, harassment, or mortality associated with the proposed project will be exempt from the prohibitions described under section 9 of the Act.

Effect of the Take

The Service has determined that this level of anticipated take is not likely to result in jeopardy to the valley elderberry longhorn beetle or result in destruction or adverse modification of critical habitat for the valley elderberry longhorn beetle.

Reasonable and Prudent Measure

The proposed action contains all of the measures needed to adequately minimize the effects of anticipated take on the beetle. For that reason, the Service has no Reasonable and Prudent Measures.

Reporting Requirements

The Sacramento Fish and Wildlife Office is to be notified within one working day of the finding of any listed species or any unanticipated take of species addressed in this biological opinion. The Service contact persons for this are the Deputy Assistant Field Supervisor of the Endangered Species program at (916) 414-6600, and the Resident Agent-in-Charge of the Service's Law Enforcement Division at (916) 414-6660.

Any dead or severely injured beetles found (adults, pupae, or larvae) shall be given to the Service's Law Enforcement Division. All observations of valley elderberry longhorn beetles - live, injured, or dead - or fresh beetle exit holes shall be recorded on California Natural Diversity Data Base (CNDDB) field sheets and sent to California Department of Fish and Game, Wildlife Habitat Data Analysis Branch, 1807 13th Street Room 2002, Sacramento, California 95814.

Conservation Recommendations

Section 7(a)(1) of the Act directs Federal agencies to utilize their authorities to further the purposes of the Act by carrying out conservation programs for the benefit of endangered and threatened species. Conservation recommendations are discretionary agency activities that can be implemented to further the purposes of the Act, such as preservation of endangered species habitat, implementation of recovery actions, or development of information and data bases.

1. The Sacramento River National Wildlife Refuge should continue to protect and restore riparian and wetland habitats in the Sacramento River basin to increase habitat for the valley elderberry longhorn beetle.

In order for the Service to be kept informed of actions minimizing or avoiding adverse effects or benefiting federally-listed species or their habitats, the Service requests notification of the implementation of any conservation recommendations.

Reinitiation – Closing Statement

This concludes formal consultation on the proposed Sacramento River Wildlife Area and the Feather River Wildlife Area and O'Connor Lakes Unit Riparian Restoration Plan Project. As provided in 50 CFR §402.16, reinitiation of formal consultation is required where discretionary Federal agency involvement or control over the action has been maintained (or is authorized by law) and if: (1) the amount or extent of incidental take is exceeded; (2) new information reveals effects of the agency action that may affect listed species or critical habitat in a manner or to an extent not considered in this opinion; (3) the agency action is subsequently modified in a manner that causes an effect to the listed species or critical habitat that was not considered in this opinion; or (4) a new species is listed or critical habitat designated that may be affected by the action. In instances where the amount or extent of incidental take is exceeded, any operations causing such take must cease pending reinitiation.

Please contact Rick Kuyper or Chris Nagano at (916) 414-6645 if you have any questions or comments regarding this intra-agency biological opinion on the Sacramento River Wildlife Area and the Feather River Wildlife Area and O'Connor Lakes Unit Riparian Restoration Plan Project.

cc:

Armand Gonzales, California Department of Fish and Game, Rancho Cordova, California
David Walker, California Department of Fish and Game, Red Bluff, California
Michele Ng, California Department of Water Resources, Sacramento, California
Woody Elliot, California Department of Parks and Recreation, Oroville, California
Stephen Bradley, The Reclamation Board, Sacramento, California
John Carlon, River Partners, Chico, California

LITERATURE CITED

Barr, C.B. 1991. The Distribution, Habitat, and Status of the Valley Elderberry Longhorn Beetle *Desmocerus californicus dimorphus* Fisher (Insecta: Coleoptera: Cerambycidae). U.S. Fish and Wildlife Service, Sacramento, California. 134 pp.

California Department of Water Resources (DWR). 1979. Land Use Changes in the Sacramento River Riparain Zone, Redding to Colusa, 1972-1977. Northern District Report, June 1979, Redding, California.

California Natural Diversity Database (CNDDB). 2005. Natural Heritage Division, California Department of Fish and Game. Sacramento, California.

Collinge, S.K., M. Holyoak, C.B. Barr, and J.T. Marty. 2001. Riparian habitat fragmentation and population persistence of the threatened valley elderberry longhorn beetle in central California. Biological Conservation 100:103-113.

Collinge, S.K. 1996. Ecological Consequences of Habitat Fragmentation: Implications for Landscape Architecture and Planning. Landscape and Urban Planning 36:59-77.

Conrad, S.G., R.L. MacDonald, and R.F. Holland. 1977. Riparian Vegetation and Flora of the Sacramento Valley. Pages 47-56 *in* A. Sands (ed.) Riparian Forests in California: their Ecology and Conservation. University of California, Davis, California.

Fahrig, L. 1997. Relative Effects of Habitat Loss and Fragmentation on Population Extinction. Journal of Wildlife Management. 61:603-610.

Frayer, W. E., D. D. Peters, and H. R. Pywell. 1989. Wetlands of the California Central Valley: Status and Trends, 1939 to mid-1980's. U.S. Fish and Wildlife Service, Region 1. Portland, Oregon.

Holway, D.A. 1998. Distribution of the Argentine ant (*Linepithema humile*) in Northern California. Conservation Biology 9:1634-1637.

Huxell, Gary .R. 2000. The Effect of the Argentine ant on the threatened valley elderberry longhorn beetle. Biological Invasions 2:81-85.

Huxel, G. R. and A. Hastings. 1999. Habitat loss, fragmentation, and restoration. Restoration Ecology 7:1-7.

Jones & Stokes, Inc. 1988. Final Report: Field Investigation of Life History Characteristics of the Valley Elderberry Longhorn Beetle along the Cosumnes River, Sacramento County, California. Prepared for the U.S. Fish and Wildlife Service. Sacramento, California. 6.pp. with appendix.

Katibah, E. F. 1984. A Brief History of Riparian Forests in the Central Valley of California. Pages 23-29 *in* Warner, R. E. And K. M. Hendrix (eds.). California riparian systems: ecology, conservation, and productive management. University of California Press, Berkeley, California.

_____, K. J. Drummer, and N. Nedeff. 1984. Current Condition of Riparian Resources in the Central Valley of California. Pages 314-321 *in* Warner, R. E. And K. M. Hendrix (eds.). California Riparian Systems: Ecology, Conservation, and Productive Management. University of California Press, Berkeley, California.

Lande, R. 1988. Genetics and demography in biological conservation. Science 241:1455-1460.

McCarten, N.F. and C.A. Patterson. 1987. Vegetation Quality and Rare Plant Study of Riparian Plant Communities along the Middle Sacramento River, California. California Department of Fish and Game Non-game Heritage Program. Sacramento, California.

McGill, Robert, R., Jr. 1975 Land use Changes in the Sacramento River Riparian Zone, Redding to Colusa. State of California, Resources Agency, Department of Water Resources. April, 1975. Sacramento, California. 23 pp.

Primack, R.B. 1998. Essentials of Conservation Biology. Second Edition. Sinaur Associates. Sunderland, Massachusetts.

Ritter, John. 2000. Valley of Plenty Fights to Survive the Irrigated Marvel, That Is the World's Richest Farmland Is Losing Ground to Economics and Urban Sprawl. USA Today. March 2.

Roberts, W.G., J.G. Howe, and J. Major. 1977. A Survey of Riparian Forest Flora and Fauna in California. Pages 3-20 *in* A. Sands (ed.) Riparian Forests in California: their Ecology and Conservation. University of California, Davis, California.

Shaffer, M.L. 1981. Minimum Populations Sizes for Species Conservation. Bioscience 31: 131-134.

Smith, S. 1977. A Short Review of the Status of Riparian Forests in California. Pages 1-2 *in* A. Sands (ed.) Riparian Forests in California: their Ecology and Conservation. University of California, Davis. Davis, California.

Thompson, K. 1961. Riparian forests of the Sacramento Valley, California. Annals of the Association of American Geographers 51: 294-315.

Thompson, K. 1977. Riparian forests of the Sacramento Valley, California. Pages 35-38 *in* A. Sands (ed.). Riparian Forests in California: their Ecology and Conservation. University of California, Davis, California. May 14.

U.S. Fish and Wildlife Service. 1984. Valley Elderberry Longhorn Beetle Recovery Plan. Portland, Oregon. 62 pp.

Ward, P.S. 1987. Distribution of the introduced Argentine ant (*Iridomyrex humilis*) in natural habitats of the lower Sacramento Valley and its effects on the indigenous ant fauna. Hilgardia 55:1-16.

Habitat Enhancement Plan for the Feather River Setback Levee and Habitat Enhancement Project at Star Bend

Sutter County, California

March 6, 2009

Prepared for:
Levee District 1 and Wood Rodgers

Prepared by:
River Partners and Stillwater Sciences

RIVER PARTNERS

580 Vallombrosa Avenue
Chico, CA 95926

Stillwater Sciences

2855 Telegraph Avenue, Suite 400
Berkeley, CA 94705

TABLE OF CONTENTS

I. INTRODUCTION 1
- A. Project overview 1
- B. Purpose of the Habitat Enhancement Plan 1
- C. Location 2
- D. Project Objectives 2
- E. Description of Work Activities 2
- F. Regulatory Context 6

II. ENVIRONMENTAL SETTING 6
- A. Land-use History 6
- B. Topography and Soils 7
- C. Hydrology 10
- D. Vegetation 10
- E. Wildlife 11

III. ENHANCEMENT PLANTING AND IMPLEMENTATION 12
- A. Planting Design 12
- B. Sensitive Species 13
- C. Targeted Avian Species 17
- D. Mitigation 19
- E. Primary Project Area 19
- F. O'Connor Lakes Unit Borrow Areas 25
- G. Implementation of Phase I 25
- H. Implementation of Phase II 30

IV. MAINTENANCE 32
- A. Weed Control 32
- B. Irrigation 33
- C. Herbivore Control 34
- D. Flood and Fire Contingencies 35

V. MONITORING AND REPORTING 35
- A. Monitoring and Reporting of Riparian Vegetation Areas 36
- B. Monitoring and Reporting of VELB Mitigation Area 36

VI. REFERENCES 40

List of Tables

Table 1. Summary of typical soil conditions from the Soil Survey of Sutter County (Lytle 1988, NRCS 2008), California on soils found on the Feather River Setback Levee and Habitat Enhancement Project at Star Bend. 9
Table 2. Federal and State-listed Endangered, Threatened, and Candidate Species occurring or potentially occurring at the Feather River Setback Levee and Habitat Enhancement Project. 12
Table 3. Key Plant Design Considerations of the Feather River Setback Levee and Habitat Enhancement Project at Star Bend, Sutter County, California. 15
Table 4. Matrix of Targeted Species Habitat Needs, Feather River Setback Levee and Habitat Enhancement Project at Star Bend, Sutter County, California. 16
Table 5. Elderberry Mitigation Requirements[1] for Feather River Setback Levee and Habitat Enhancement Project at Star Bend (Stillwater Sciences 2008), Sutter County, California. 19
Table 6. Summary of Overall Proposed Plant Species at the Feather River Setback Levee and Habitat Enhancement Project at Star Bend, Sutter County, California. 20
Table 7. Proposed Composition of Riparian Scrub Shrub (Elderberry) at the Feather River Setback Levee and Habitat Enhancement Project, Sutter County, California. 22
Table 8. Proposed Composition of Great Valley Mixed Riparian Forest at the Feather River Setback Levee and Habitat Enhancement Project, Sutter County, California. 23
Table 9. Proposed Composition of Riparian Scrub Shrub (Blackberry) at the Feather River Setback Levee and Habitat Enhancement Project, Sutter County, California 24
Table 10. Proposed Composition of Riparian Scrub Shrub (Blackberry) (Closed) at the Feather River Setback Levee and Habitat Enhancement Project, Sutter County, California 24
Table 11. Proposed Composition of Native Grass Mix at the Feather River Setback Levee and Habitat Enhancement Project, Sutter County, California. 25
Table 12. Proposed Composition of Native Grasses for Borrow Areas, Feather River Setback Levee and Habitat Enhancement Project at Star Bend, Sutter County, California. 25
Table 13. Standard planting materials and times for woody species 28
Table 14. Calendar of planting implementation for Phase I of the Feather River Setback Levee and Habitat Enhancement Project at Star Bend, Sutter County, California. 29
Table 16. Calendar of planting implementation for Phase II of the Feather River Setback Levee and Habitat Enhancement Project at Star Bend, Sutter County, California. 31
Table 17. Summary of Native grass Plug-Planting for Borrow Areas of the Feather River Setback Levee and Habitat Enhancement Project at Star Bend, Sutter County, California. 32
Table 18. Irrigation goals for the Feather River Setback Levee and Habitat Enhancement Project at Star Bend, Sutter County, California. 34
Table 19. Summary of Herbivore Control Methods at the Feather River Setback Levee and Habitat Enhancement Project at Star Bend, Sutter County, California. 35
Table 20. VELB Mitigation Monitoring and Reporting, Feather River Setback Levee and Habitat Enhancement Project. 37

List of Figures

Figure 1. Project Vicinity Map for the Feather River Setback Levee and Habitat Enhancement Project at Star Bend, Sutter County, California. 3
Figure 2. Project Boundaries of the Feather River Setback Levee and Habitat Enhancement Project at Star Bend, Sutter County, California. 4
Figure 3. Soils Map, Feather River Setback Levee and Habitat Enhancement Project at Star Bend, Sutter County, California. 8
Figure 4. Habitat Value of Native Riparian Plants (RHJV 2004) 18
Figure 5. Planting Associations for the Feather River Setback Levee and Habitat Enhancement Project at Star Bend, Sutter County, California. 21

List of Appendices

Appendix I Excerpts from Sutter County Soil Survey
Appendix II Vegetation Association Tiles
Appendix III 1999 US Fish and Wildlife Elderberry Conservation Guidelines

HABITAT ENHANCEMENT PLAN FOR THE FEATHER RIVER SETBACK LEVEE AND HABITAT ENHANCEMENT PROJECT AT STAR BEND
Sutter County, California

I. INTRODUCTION

A. Project overview

Levee District One (LD1) of Sutter County has proposed to construct the Feather River Setback Levee and Habitat Enhancement Project at Star Bend (Project) to replace a portion of existing levee that poses a high risk of failure in order to decrease the flood stage, velocity, and scour potential; increase and improve floodplain habitat; and improve habitat connectivity between the Abbot Lake and O'Connor Lakes Units of California Department of Fish and Game's (CDFG) Feather River Wildlife Area (Figure 1) (EIP Associates 2007). Setting back the levee will create approximately 55 acres of floodplain habitat, which includes habitat enhancement and on-site mitigation for impacted elderberry (*Sambucus mexicana*). Most of the material needed to build the new setback levee will come from the existing levee embankment and from CDFG's O'Connor Lakes Unit, just southeast of the project location. The project entails 1) filling in the levee toe ditch that is landward of the existing levee to prevent fish stranding; 2) realigning existing irrigation pipelines under the current levee to accommodate the new setback levee configuration; 3) create approximately 55 acres of riparian habitat with native vegetation that will be phased over time; and 4) filling and revegetating borrow areas disturbed by levee construction with native grasses and herbaceous understory species.

The project will occur in two phases. Phase one will consist of three components: (1) elderberry shrubs located on the banks of the existing levee toe ditch and within the path of a new pipeline will be transplanted to a nearby location within the project area prior to construction, (2) twenty acres (inclusive of the elderberry transplant area) of native associate plants will be planted to enhance habitat for the valley elderberry longhorn beetle (*Desmocerus californicus dimorphus)* at the primary project area towards the end of or immediately following project construction, and (3) borrow areas at O'Connor Lakes will be seeded with native grasses and forbs after these areas have been refilled and graded. Phase two, which is optional and has not yet been scheduled, will consist of planting the remaining 35 acres of the primary project area. Consideration will be given to a cultural resources site located in the primary project area.

B. Purpose of the Habitat Enhancement Plan

This plan is to serve as a technical guide for LD1, CDFG or the restoration contractor to implement the habitat enhancement and mitigation planting and post-implementation maintenance and monitoring associated with this project. It is intended to provide technical details to execute the project and assist in meeting the requirements established in the CDFG Streambed Alteration Agreement with LD1 of Sutter County (Notification No. 1600-2007-0217-R2) and partial mitigation requirements outlined in the Project Environmental Impact Report (EIR, EIP Associates 2007), Environmental

Assessment (EA, Stillwater Sciences and Wood Rodgers 2008), Biological Assessment (BA, Stillwater Sciences 2008a), and Elderberry Survey Report (Stillwater Sciences 2008b).

C. Location

The Feather River Setback Levee and Habitat Enhancement Project at Star Bend is located on the west levee of the Feather River, approximately six miles south of Yuba City, Sutter County, California (Figure 1). The 55-acre site is just upstream of the Star Bend boat ramp (near River Mile 18) and is bound by a sharp bend in the river (Figure 2). Access by road is from the west via Star Bend Road off of Garden Highway.

D. Project Objectives

Several objectives have been identified for the Feather River Setback Levee and Habitat Enhancement Project at Star Bend. These objectives also delineate the parameters and guides the actions devoted to habitat restoration. The primary goal of the habitat enhancement work is to identify a feasible restoration project to:

- Enhance and restore fish, wildlife, and riparian habitat in the project area with the restoration of 20 acres (Phase I), which includes on-site mitigation for impacted elderberry shrubs;
- Maximize a variety of riparian plant communities and other floodplain habitat types through the restoration of an additional 32.1 acres (Phase II).
- Improve connectivity between adjacent riparian habitats and river channels;
- Provide mitigation for impacts to elderberry shrubs, the host plant of the federally threatened Valley elderberry longhorn beetle;
- Meet hydraulic roughness value objectives in the expanded floodway, and
- Provide protection for a known archaeological site within the levee setback area.

E. Description of Work Activities

1. Site Prep

To accommodate construction of the setback levee, up to 55 acres of existing agricultural fields and orchards will be cleared and graded. Existing trees within and 50 feet beyond the landward proposed setback levee footprint, as well as within 15 feet of the pipeline realignment, will require removal, including stumps. Construction scrapers will remove the top 6 inches of vegetative matter from the levee footprint and adjacent area. Construction storage and lay-down areas (i.e., staging areas) will be located landward of the existing levee system adjacent to the two tie-ins at either end of the new levee alignment in the cleared and graded areas (Figure 2).

2. Setback Levee Construction

The proposed setback levee will consist of a 23-foot high earthen levee beginning near the intersection of Star Bend Road and the existing right bank of the Feather River at Levee Mile (LM) 4.50 near RM 18.0 and continue in a southeasterly direction to the approximate intersection of the extension of Tudor Road with the right bank of the Feather River at LM 3.75 and RM 16.75 (Figure 2). The total length of the setback will be approximately 3,400 feet with a minimum top width of 20 feet and side slopes that are 1-foot vertical to 3 feet horizontal.

Figure 1. Project Vicinity Map for the Feather River Setback Levee and Habitat Enhancement Project at Star Bend, Sutter County, California.

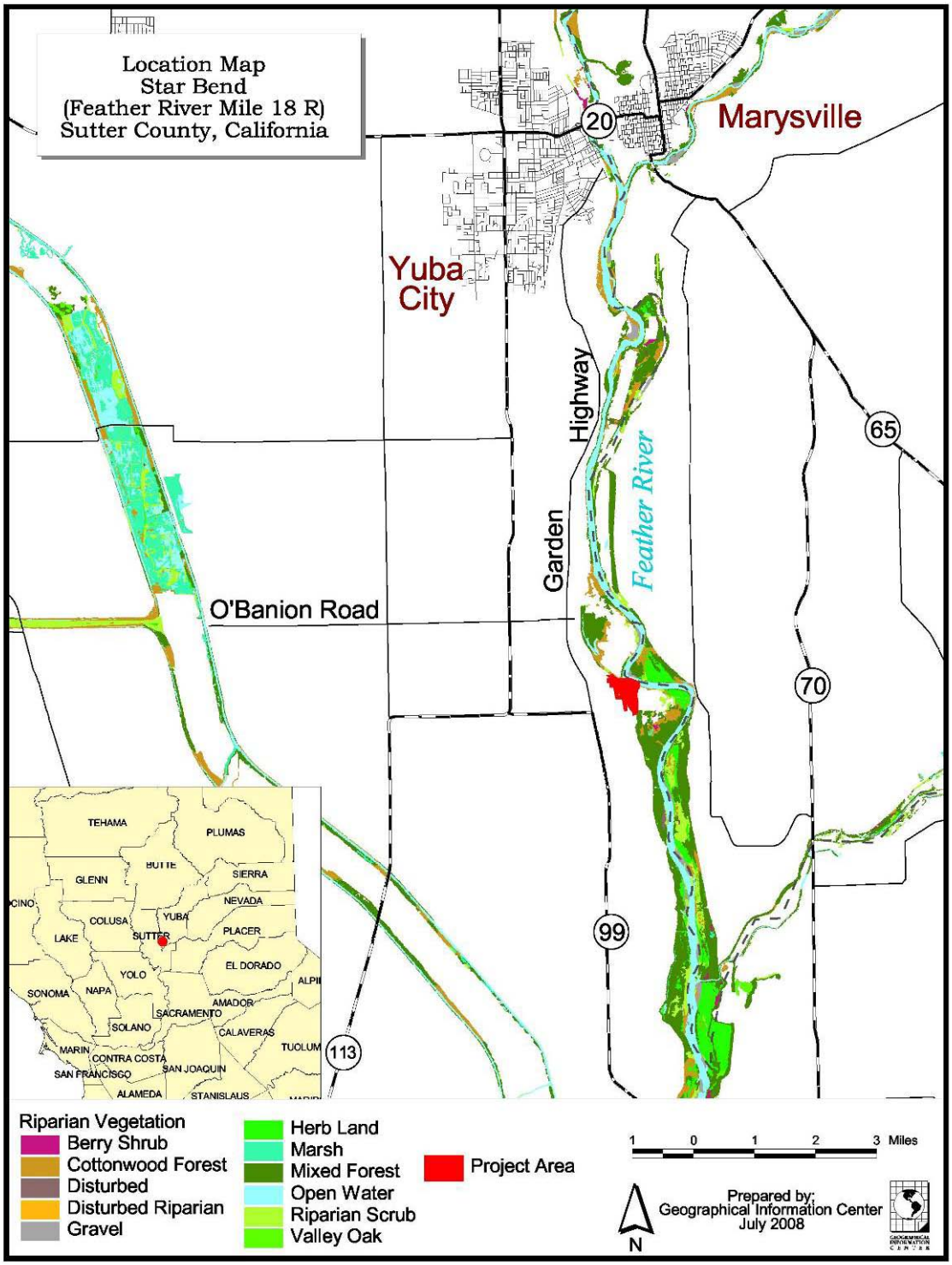

Figure 2. Project Boundaries of the Feather River Setback Levee and Habitat Enhancement Project at Star Bend, Sutter County, California.

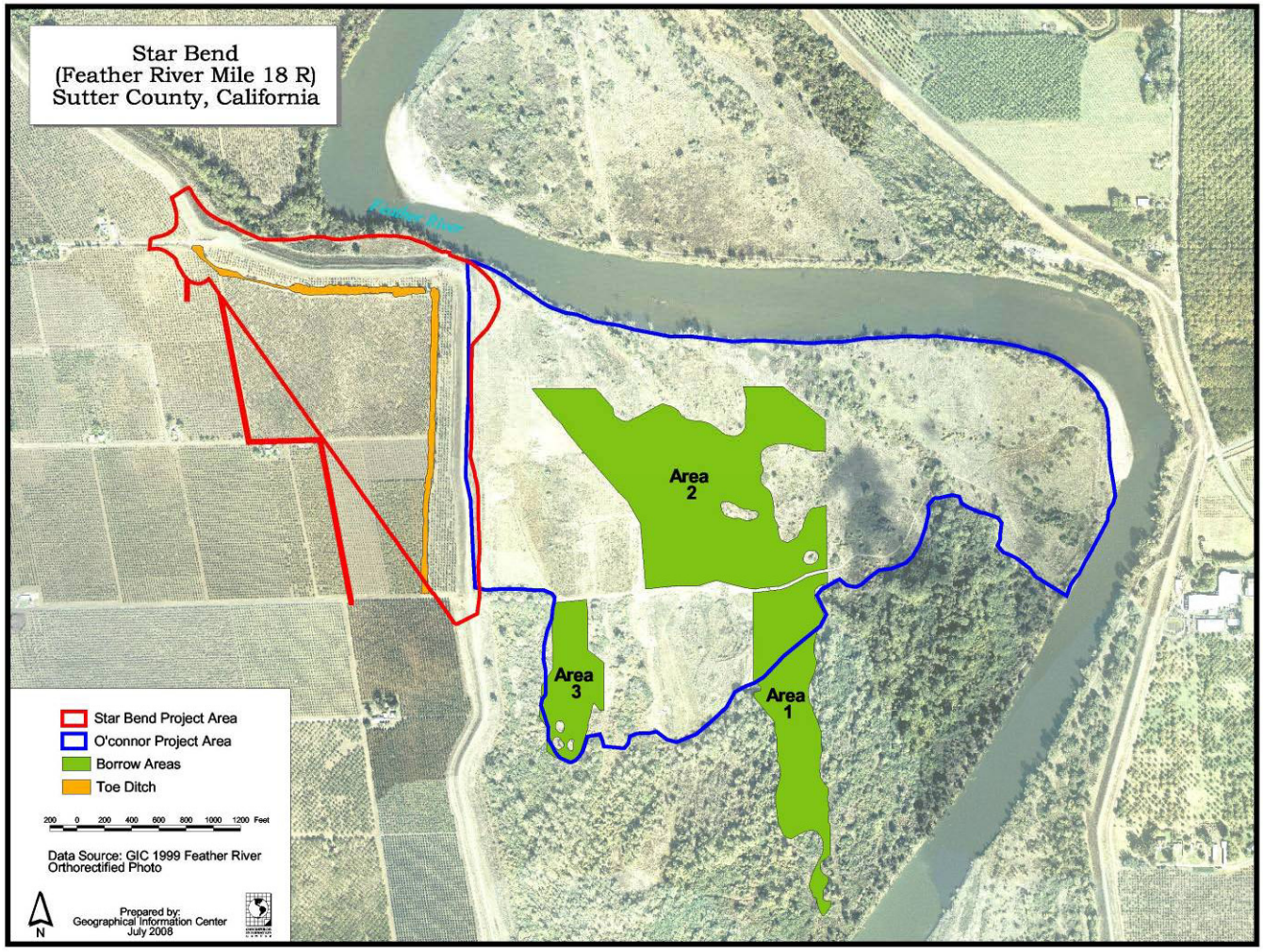

Degradation and decommissioning of the existing levee will occur concurrently with the construction of the new setback levee. With the exception of the northeast corner, the existing levee will be fully degraded or removed to ground level. In the northeast corner, the existing levee will be partially degraded or removed to elevations 1 to 4 feet above natural ground level to protect an adjacent cultural resource site (not depicted in a figure, as the location is confidential). Areas disturbed by construction will be graded to provide positive drainage away from the setback levee and revegetated by seeding with native herbaceous plant species.

3. Setback Levee Borrow Areas proactive

Most of the material needed to construct the new setback levee will come from three primary sources: (1) the existing levee that will be degraded; (2) a 12.6 acre triangular-shaped area located between the existing levee and proposed setback levee; and, (3) three areas in the O'Connor Lakes Unit, where material was borrowed previously for the Shanghai Bend Setback Levee Project (Figure 2). The O'Connor Lakes Unit is located immediately east and southeast of the existing levee (Figure 2). The unit is managed by CDFG and California Department of Water Resources (CDWR) to provide wildlife habitat, restore native plant communities, and convey Feather River flood events. CDWR regularly mows and clears a 400-foot swath of vegetation in Borrow Area 1, and portions of the property between borrow areas 2 and 3 were excavated by U.S. Army Corps of Engineers (USACE) to provide material for levee repair following the 1997 flood (Figure 2) (River Partners 2006). Following excavation and construction of the setback levee, all borrow areas adjacent to the new setback levee area and within the O'Connor Lakes Unit will be backfilled with material from the decommissioned levee and restored with native riparian vegetation. Any additional embankment material necessary to construct the setback levee will come from borrow sites within 30 miles of the Project area.

4. Pump and Pipeline Improvements

With construction of the setback levee and decommissioning of the existing levee, various segments of pipelines now conveying water from a pumping facility on the waterside of the existing levee will need to be replaced and rerouted. New parallel pipe systems and a new distribution box will be installed between the existing pump station and the landside of the setback levee. The distribution box and control valves on the landside of the existing levee will be abandoned and/or removed.

5. Levee Ditch Filling

Following the decommissioning of the existing levee, the existing levee ditch will become situated river-side of the new setback levee (Figure 2). There is concern that fish could become stranded in the existing levee ditch following flood events. The levee ditch will, therefore, be filled with material from the nearby orchard and the decommissioned levee so that there are no depressions where fish could become stranded. The levee ditch would be carefully filled to grade to preserve as much of the existing riparian trees and shrubs as possible.

6. Riparian Habitat Enhancement

As part of the Project, LD1 will acquire and manage approximately 60 acres of land from the landowners prior to constructing the setback levee. Upon completing construction of the proposed setback levee and degradation of the existing levee, LD1 will make the

land on the waterside of the setback levee available to CDFG or other entities for native vegetation and wildlife habitat enhancements. LD1 will revegetate up to 52.1 acres for habitat enhancement in accordance with this Habitat Enhancement Plan, and will restrict future activities within this area to ensure that the habitat enhancement is sustained in perpetuity. Phase I will be planted in association with the setback levee construction. Phase II will be implemented for further restoration and expansion of riparian habitat that may be applied as mitigation for the future regional levee improvement projects and/or the Sutter County Habitat Conservation Plan.

F. Regulatory Context

As described in the introduction, this Project is being initiated to replace a portion of the existing levee that poses a high risk of failure. Other related Project reports detail potential mitigation measures required as part of the Project, as well as the broad regulatory context (e.g., EIP Associates 2007 [EIR], Stillwater Sciences 2008a [BA] , Stillwater Sciences 2008b [Elderberry Survey Report], Stillwater Sciences 2008c [Wetland Delineation Report], and Stillwater Sciences and Wood Rodgers 2008 [EA]). Of pertinence to this Habitat Enhancement Plan are the unavoidable impacts that will occur to blue elderberry shrubs. The valley elderberry longhorn beetle is protected under the federal Endangered Species Act as a threatened species (45 FR 52803–52807); conservation is achieved through protection of its potential habitat and host plant, blue elderberry, with one or more stems measuring ≥1 inch in diameter at ground level. Because this Project involves unavoidable impacts to multiple elderberry shrubs, mitigation is required (Stillwater Sciences 2008b). LD1 is mitigating these impacts through on-site transplantation of unavoidable blue elderberry shrubs and on-site mitigation plantings.

II. ENVIRONMENTAL SETTING

A. Land-use History

Prior to the arrival of Europeans, Native Americans of the Valley Nisenan populations established villages along the Feather River and its tributaries in the vicinity of the site. The northwest corner of the site is a historic low rise along the river and contains a recorded indigenous village site (Bayham 2004).

John Sutter laid claim to the region when he secured the New Helvetia Land Grant in the 1840's. He promptly built Hock Farm, a rancho in the vicinity of the site, which provided cattle stock that ranged freely along Feather River. W.H. Ashford owned and farmed a section of the west bank as early as 1880, which includes most of the site. In 1880, the O'Connor family owned the parcel to the south of the site where the lakes are located (Sutter County 1880). The 1912 (U.S. Army Corps of Engineers 1912) geologic survey shows dredging activities to the north and south of the site, but not within the site. The 1912 survey also shows that the site had not been cleared for agriculture.

The Feather River and three other properties surround the Project site (i.e., Churkin, Singh, and CDFG properties). The majority of the primary Project area is a plum (*Prunus* sp.) orchard that is flood irrigated. The existing levee, operated by LD1, and the Star Bend pumping plant also are located in the main Project area. The pumping plant

includes pump station discharge lines and irrigation pipelines that bisect the northern portion of the site and continue to adjacent properties. All the property to the east is part of the O'Connor Lakes unit of CDFG's Feather River Wildlife Area. The unit is managed by CDFG and CDWR to provide wildlife habitat, restore native plant communities, and convey Feather River flood events. CDWR regularly mows and clears vegetation in Borrow Area 1, and portions of the property between Borrow Areas 2 and 3 were excavated by USACE to provide material for levee repair following the 1997 flood (Figure 2) (River Partners 2006).

B. Topography and Soils

Elevations of the Project area average 45 feet above sea level. Topography is generally flat, with steeper gradients at the river's edge. Several small hills and depressions occur in the O'Connor Lakes Unit as a result of overbank flood scour and deposition, and previous soil excavation and habitat enhancement projects.

The Sutter County Soil Survey (Lytle 1988, NRCS 2008) identifies four flood-plain soil series, Columbia, Conejo, Holillipah and Shanghai, within the project and borrow areas and shows that the Conejo mapping unit (124) accounts for the majority of the site (Figure 3). Conejo soils are very deep, well drained soils formed in alluvium and are observed on alluvial fans and stream terraces. Holillipah soil mapping unit (134) occupies the northern boundary of the project area, which runs along the Feather River, and the borrow areas at the O'Connor Lakes Unit. The Holillipah soils, which contain deep sand to loamy sand derived from mixed alluvium, are frequently flooded, and somewhat excessively well drained. Two other soil mapping units occur within the site and a summary of all the soil types is shown in Table 1 and Appendix I.

Figure 3. Soils Map, Feather River Setback Levee and Habitat Enhancement Project at Star Bend, Sutter County, California.

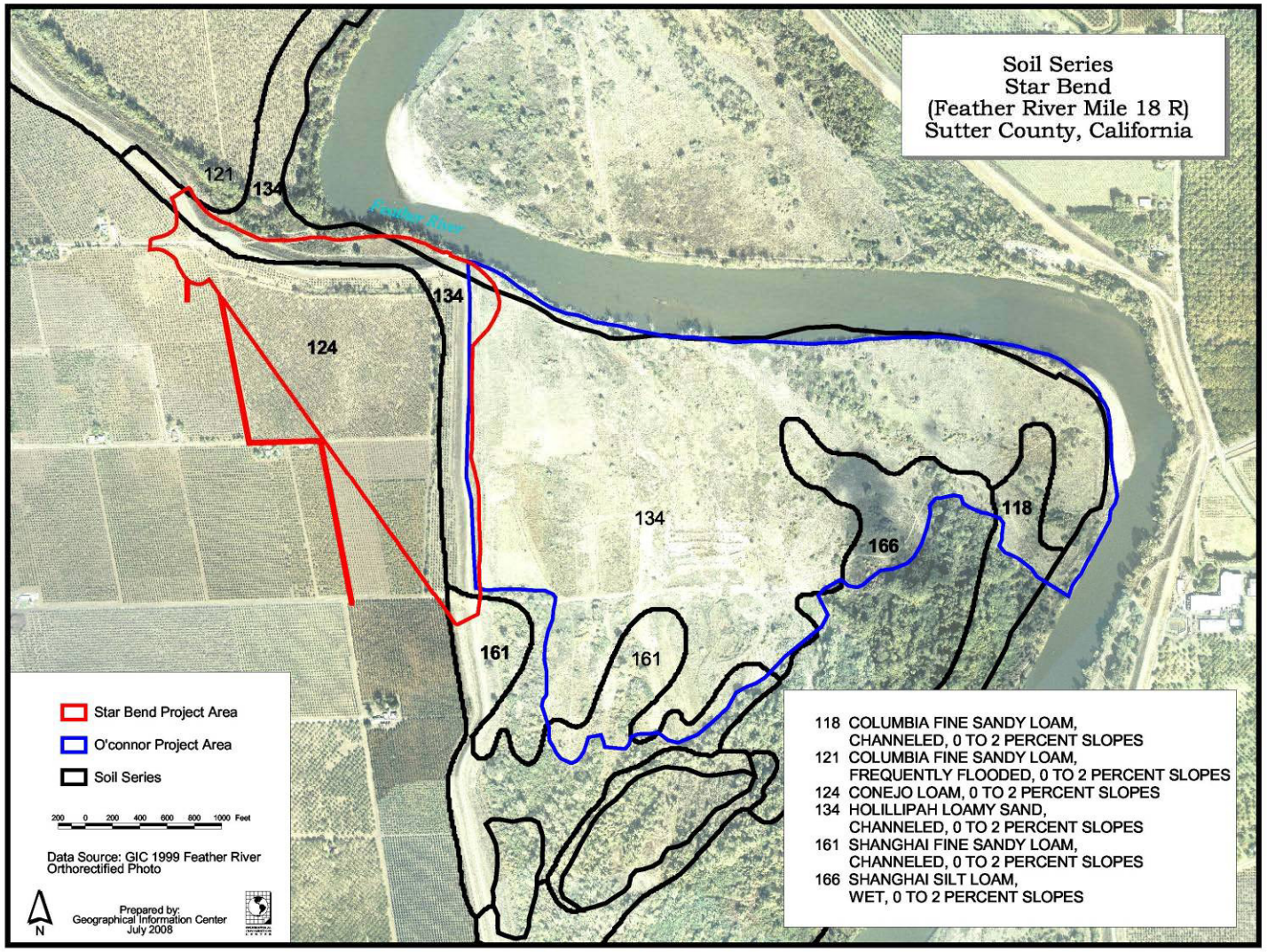

Table 1. Summary of typical soil conditions from the Soil Survey of Sutter County (Lytle 1988, NRCS 2008), California on soils found on the Feather River Setback Levee and Habitat Enhancement Project at Star Bend.

Soil Property	Conejo loam, 0 to 2 percent slopes	Holillipah loamy sand, channeled, 0 to 2 percent slopes	Shanghai silt loam, wet, 0 to 2 percent	Shanghai fine sandy loam, channeled, 0 to 2 percent slopes	Columbia fine sandy loam, channeled, 0 to 2 percent slopes
Mapping unit	124	134	166	161	118
% Slope	0-2	0-2	0-2	0-2	0-2
Texture	Loam	Loamy sand	Silt loam	Fine sandy loam	Fine sandy loam
Depth of soil	Very deep	Very deep	Very deep	Very deep	Very deep
Drainage	Well drained	Somewhat excessively drained	Somewhat poorly drained soil	Somewhat poorly drained soil	Somewhat poorly drained soil
Permeability	Slow to medium	Rapid	Moderate	Moderate	Moderately rapid
Available water capacity		Low	High to very high	High	Moderate
Limitations to plant growth	Some areas subject to flooding.	Runoff is very slow, and the hazard of water erosion is severe. Subject to frequent, long periods of flooding in December through April.	Runoff is slow, and the hazard of water erosion is severe. Subject to frequent, long periods of flooding from December through April.	A seasonal high water table is at a depth of 36 to 60 inches in December through April. Runoff is slow, and the hazard of water erosion is severe. Subject to frequent, long periods of flooding from December through April.	A seasonal high water table is at a depth of 36 to 60 inches in December through April. Runoff is slow, and the hazard of water erosion is severe. Subject to frequent, long periods of flooding from December through April.

C. Hydrology

The project area and the O'Connor Lakes Unit were once part of a dynamic system of meandering channels and oxbow lakes that covered an area much wider than the levees of the Feather River Flood Control Project. Levee construction, beginning in the 1860's, confined the channel to its present location, and dams on the Feather and Yuba rivers regulate flows.

To the north of the Project area, overbank flow from the Feather River periodically (i.e., modeled stage of the 2.5- to 3-year recurrence interval flow [approximately 60,000 cfs]) fills the drainage feature and depressions left by dredger mining (Wood Rodgers, Inc. 2007). In the O'Connor Lakes unit, scour channels, debris accumulations in trees and shrubs, and deposits of sand are evidence of periodic overbank flow. Periodic maintenance on the O'Connor Lakes Unit is conducted by the Department of Water Resources (DWR) to increase the conveyance of flood flows and transport sediment.

On the land-side of the existing levee system, rain, flood irrigation and seepage under the levee are the primary sources of surface water. Flooding is used to irrigate the orchard crops, occasionally leaving standing water behind for short periods of time following irrigation. The levee ditch was constructed to contain any water seeping under the toe of the levee, but was only inundated in 1986 and 1997, years in which extremely large flood events occurred (B. Hampton, Manager, LD1, pers. comm., 2007). During those events, water remained for a couple of weeks, generally percolating into soil after flood flows had receded (B. Hampton, Manager, LD1, pers. comm., 2007). In 2006, which had a relatively large flood event, there was no water in the levee ditch (B. Hampton, Manager, LD1, pers. comm., 2007).

D. Vegetation

The majority of the primary Project area is a plum orchard that is flood irrigated. The orchard is bisected across the north and eastern edges by the levee ditch; the orchard continues immediately adjacent to the levee ditch on the north and east sides. Annual grass and weedy forb species occur between the rows of trees, but the sparse distribution and short stature of the forbs indicate they are sprayed with herbicides or otherwise controlled on a regular basis.

Vegetation types in the project and borrow areas were assessed during a September 13, 2006 field survey by EIP Associates (EIP Associates 2007a) and were mapped and described during wetland delineation surveys conducted in September 2007 and January 2008 by Stillwater Sciences (Stillwater Sciences 2008b).

Plant species observed during a September 13, 2006 field survey by EIP Associates included wild oats (*Avena fatua*), ripgut brome (*Bromus diandrus*), soft brome (*Bromus hordeaceus*), turkey mullein (*Eremocarpus setigerus*), wild mustard (*Brassica* sp.), and prickly lettuce (*Lactuca serriola*) (EIP Associates 2007a).

Riparian forest habitat occurs north of the existing levee, throughout much of the levee ditch, and across much of the O'Connor Lakes unit. The area north of the existing levee in the primary Project Area has a dense canopy of native riparian tree species

(approximately one acre), including Fremont cottonwood (*Populus fremontii*), Goodding's black willow (*Salix gooddingii*), northern California black walnut (*Juglans californica* var. *hindsii*), Oregon ash (*Fraxinus latifolia*), and valley oak (*Quercus lobata*) (Figures 4a and 5g in Appendix F). There is a sparse to moderately dense shrub layer with arroyo willow (*Salix lasiolepis*), box elder (*Acer negundo*), California button willow (*Cephalanthus occidentalis*), California rose, and narrowleaf willow (*Salix exigua*). The vine layer is thin, containing predominantly California wild grape (*Vitis californica*) and poison oak (*Toxicodendron diversilobum*). The herb layer is generally absent, with small clearings containing black mustard (*Brassica nigra*), oat (*Avena* sp.), perennial pepperweed (*Lepidium latifolium*), seashore vervain (*Verbena littoralis*), and soft brome.

Portions of the levee ditch (approximately three acres) are predominantly comprised of a mature canopy of valley oak, occasionally shared with blue elderberry (*Sambucus mexicana*). The understory is fairly sparse, with blue wildrye (*Elymus glaucus*), California blackberry, California rose, California wild grape, Goodding's black willow, narrowleaf willow, and poison oak.

E. Wildlife

The project area is part of 2,142-acre block of contiguous wildlife habitat on the Feather River. Game birds include pheasant, quail, dove, and wild turkey. Other game includes deer and rabbit. A Great blue heron rookery has been present at just south of the O'Connor Lakes for many years (Dale Whitmore, Wildlife Biologist, CDFG, personal communication). Special status species known to occur in the vicinity of the site include Yellow-billed cuckoo, Swainson's hawk, Chinook salmon, winter steelhead and river otter (California Department of Fish and Game 1988). The site and O'Connor Lakes Unit also contains habitat for the valley longhorn elderberry beetle.

The Feather River Setback Levee and Habitat Enhancement Project at Star Bend will increase the amount of floodplain potentially exposed to inundating flows by approximately 49 acres. Floodplain restoration will allow for higher quality floodplain habitat (better water quality, food inputs, and shelter) for juvenile salmonids and other native species such as Sacramento splittail and steelhead. Organic material produced by native deciduous species restored within the floodplain provides an increased nutrient load for the aquatic environment. This influx of nutrients provides for a greater invertebrate population, thereby creating an abundant food source for fish.

Table 2. Federal and State-listed Endangered, Threatened, and Candidate Species occurring or potentially occurring at the Feather River Setback Levee and Habitat Enhancement Project.

Name	Scientific Name	Status
Least Bell's Vireo (extirpated)	*Vireo bellii pusillus*	FE, CE
Chinook Salmon, Sacramento River winter-run ESU	*Oncorhynchus tshawytscha*	FE. CE
Chinook Salmon, Central Valley spring-run ESU	*Oncorhynchus tshawytscha*	FT, CT
Chinook Salmon, Central Valley Fall-run and late fall-run ESU	*Oncorhynchus tshawytscha*	FC, CSC
Steelhead, Central Valley ESU	*Oncorhynchus mykiss*	FT
Green sturgeon SDP	*Ascipenser medirostris*	FC[1], CSC
Valley Elderberry Longhorn Beetle	*Desmocerus californicus diamorphus*	FT
Western Yellow-billed Cuckoo	*Coccyzus americanus occidentalis*	FC, CE
Willow Flycatcher	*Empidonax trailii*	FSC, CE
Swainson's Hawk	*Buteo swainsoni*	FSC, CT

ESU – Evolutionary Significant Unit
FE – Federal-listed Endangered Species
FT – Federal-listed Threatened Species
FC – Federal Candidate Species
FSC – Federal Species of Concern
[1]FT effective June 6, 2006
CE – California State-listed Endangered Species
CT – California State-listed Threatened Species
CSC – California Species of Concern

III. ENHANCEMENT PLANTING AND IMPLEMENTATION

Riparian areas harbor the most diverse assemblage of wildlife species of all habitat types in California. Restoration and mitigation activities on the Feather River Setback Levee and Habitat Enhancement Project at Star Bend will have a number of ecological and biological benefits in both the short and long term. These activities will:

- Enlarge and connect habitat (diminish fragmentation) along the lower Feather River,
- Reduce the potential for invasion of non-native plant species, and
- Improve the habitat for a variety of wildlife species that are dependent on riparian habitat.

A. Planting Design

1. Purpose of Planting Design

The plant design is an important component of the adaptive management framework and provides a testable hypothesis of site understanding. The plant design is intended to:

- Communicate project layout to the restoration contractor, regulatory agencies, and project stakeholders;
- Decrease cost while maintaining integrity of the plant design;
- Match plant placement to site conditions, management objectives, and wildlife habitat requirements;
- Estimate plant material so that appropriate numbers can be cultivated; and
- Provide a framework to document and analyze plant survivorship, and make adaptive management decisions regarding replanting, if necessary.

2. Procedure

The plant design will be translated to the field through the use of a labeling system that identifies a woody plant for each planting location. This system allows for the rapid implementation of the site-specific design and monitors survival patterns across a field. The procedure consists of the following steps:

- Review site assessment information.
- List design considerations (based on the physical setting, wildlife objectives, or management issues).
- Match vegetation to site conditions and project goals:
    - identify appropriate vegetation associations,
    - express plant arrangement for particular vegetation associations (a “tile”),
    - provide a rationale for selection, and
    - assign vegetation associations to project areas.
- Estimate plant numbers and develop a plant design map.
- Enter data into a database, print labels, and modify database based on new information.

3. Notable Site Conditions and Design Characteristics

Physical and biological features influence long-term survivorship and the selection of vegetation. When considering design, site condition is one important factor, but wildlife requirements and management practices are also critical elements. Based on the available information, the most influential factors on the design are:

- Wildlife objectives and the strategy to produce immediate habitat benefits,
- Hydraulic considerations,
- Mitigation needs,
- Site access, and
- Management practices

Specific design considerations are presented in Table 3.

B. Sensitive Species

The design approach focuses on the habitat requirements of multiple sensitive species known to utilize riparian communities, including Valley elderberry longhorn beetle, Swainson’s hawk, Sacramento splittail, Central Valley spring-run Chinook salmon, Central Valley fall-run Chinook salmon, and Central Valley steelhead. These species and their specific habitat needs are listed in Table 4 and are discussed in greater detail below. Habitat requirements are compiled in the California Wildlife Habitat Relationship System, CWHR 8.0 (California Department of Fish and Game 2003) and Inland Fishes of California (Moyle, 2002).

1. Habitat Requirements for Sensitive Species

a) Valley Elderberry Longhorn Beetle (VELB)

VELB rely on blue elderberry shrubs for the completion of their lifecycle. The females lay eggs directly on the stem of the blue elderberry. Once hatched, the larvae bore into the pith of the tree and move down toward the base. Larvae reside in the stems of blue elderberry shrubs for one to two years before emerging as adults in early spring (mid-March to early June) to feed on the host plant's stem, leaves, and flowers. The presence of blue elderberry within and around the project area indicates the potential for VELB inhabitance. VELB habitat is provided in this plan.

b) Swainson's Hawk

The current distribution and nesting habitat of the Swainson's hawk is not confined to riparian areas but is directly affiliated with such habitat. Over 90% of these birds are found to nest in cottonwoods and valley oaks that provide excellent cover near treetops, the prime look-out location for foraging (Josselyn et al., 1988). Preferred nesting trees are typically within 300 feet of a major valley stream, creek, or slough. Grasslands with abundant populations of small mammals are the preferred foraging habitat for Swainson's hawk. In the Central Valley, these hawks generally nest in riparian areas that are adjacent to grassland and pastures. The habitat requirements for Swainson's hawk, dense native riparian cover adjacent to grassland, are consistent with goals of this habitat enhancement plan.

Table 3. Key Plant Design Considerations of the Feather River Setback Levee and Habitat Enhancement Project at Star Bend, Sutter County, California.

Objective/Factor	Example of Project Design Considerations
Maintain general flood flow conveyance patterns	Orient rows parallel to general flow direction and do not direct flows toward the newly constructed setback levee. A combination of shrub and mixed riparian forest near the setback levee will aid in dissipating wave energy and protect the levee from surface erosion when overbank flows cross the site.
Provide immediate (< 3 years) habitat benefits and high probability of long-term survivorship	In the short term, relatively transient species (cottonwood and willows) will provide several generations of targeted bird species with nesting and foraging habitat. Planting a mixed riparian forest, maximizes quality habitat as the slow growing, but shade tolerant oaks mature.
Minimize sources of weeds, provide habitat along project edges	Use native plants to displace weeds in areas outside the main plantable area. We will use spreading plants (e.g., native blackberry) and native understory species will be used to outcompete black mustard, yellow starthistle, perennial pepperweed and other invasive species that currently grow on site.
Maintain high plant species and vegetative structural diversity	PRBO data suggests that bird diversity is highest in areas with 5-7 shrub species over a 50-m^2 area. Design considerations include varying density across the site to allow light gaps and create structural differences (grouping trees together will create pockets of shade and light gaps), creating vegetation patches (grouping small shrubs together will mimic larger plants and may attract desirable wildlife species faster than if they were grown apart), and considering herbaceous plantings between plant rows.
Provide valley elderberry longhorn beetle (VELB) habitat	Plant elderberry clusters across the site. A 100-foot buffer excludes elderberry from areas that are subject to future maintenance activities next to roads and levees.
Provide foraging and nesting sites for Swainson's hawk	Tall riparian trees will provide nesting and perching areas. Perennial grassland (RHJV 2000) provides consistent access to prey and good availability of prey.
Enhance floodplain habitat for anadromous fish species (spring-run Chinook, fall-run Chinook, steelhead).	Native trees, shrubs and understory will support the aquatic food web through increased food inputs by attracting invertebrate populations and providing shelter for juvenile fish species when the floodplain is inundated for a period of time.
Minimize disturbance to wildlife	Use vegetation as a screen by planting trees in curved rows and planting perimeter areas with grass and herbaceous plants such as mugwort and gumplant in the second year.
Minimize future impacts to maintenance areas.	No woody species will be planted within 50 feet of the setback levee. No elderberry or California blackberry will be planted within 100 feet of the setback levee.

Table 4. Matrix of Targeted Species Habitat Needs, Feather River Setback Levee and Habitat Enhancement Project at Star Bend, Sutter County, California.

Species	Habitats	Habitat Elements								Notable Habitat Features
		Substrate	Tree layer	Riparian Inclusions	Herbaceous layer	Shrub layer	Hardwood	Invertebrates	Terrestrial insects	
Valley elderberry longhorn beetle (*Desmocerus californicus dimorphus*)	Valley foothill riparian forest Valley oak woodland					E				Host plant is Mexican elderberry (*Sambucus mexicana*)
Swainson's hawk *(Buteo swainsoni*)	Valley foothill riparian forest Valley oak woodland Herbaceous		S	S		S				Nests in open riparian habitat, open grasslands with scattered large trees or groves.
Sacramento splittail (*Pogonichthys macrolepidotus*)	Slough Floodplain				E	E		E		Found in slower moving sections of large rivers and in sloughs. Requires flooded vegetation such as terrestrial shrubs and herbs for spawning and rearing.
Central Valley fall-run Chinook salmon (*Oncorhynchus tshawytscha)*	Main stem of large rivers Open ocean Estuary	E						E		Requires suitable conditions in the main stem of large rivers (gravel composition, water depth, and velocity) for spawning. Young fish survival is dependant on food source abundance (aquatic invertebrates and detritus) and available refugia. Emigrate to saltwater within 3 months to 2 years after emergence. Peak migration to freshwater occurs in September and October and spawning takes place in October and November.
Central Valley spring-run Chinook salmon (*Oncorhynchus tshawytscha)*	Main stem of large rivers Open ocean Estuary	E						E		Same as Fall-fun Chinook except this species enters the river as immature fish in May and June and spawn after reaching maturity, typically in mid-September.
Central Valley steelhead (*Oncorhynchus mykiss*)	Main stem of large rivers Open ocean Estuary	E						E		Spend the first 1-3 years of life in freshwater streams then emigrates to salt or brackish waters for adult life stage. Spawns in main stem of large river systems in gravel substrate.

Notes: E = essential habitat element, S = secondary habitat element, Valley Oak Woodland = Valley Oak Series.
Sources: California Wildlife Habitat Relations Database (CWHR 2002) and Inland Fishes of California (Moyle, 2002).

c) Central Valley Salmon

(1) Spring-run Chinook

Spring-run Chinook salmon enter freshwater rivers as immature fish in spring and early summer. They hold in deep pools in upstream reaches for several months and spawn in areas with adequate gravel composition in early fall. Juvenile salmon require low water temperatures (13-18 degrees C) and refugia from predation (Moyle, 2002). Such conditions are typically made available by the presence of SRA habitat and LWD. Much of the former spring-run Chinook habitat has been eliminated by dams. The lower Feather River is among some of the few remaining spawning areas for spring-run Chinook salmon. Enhancing the floodplain habitat so that it can benefit spring-run Chinook salmon is consistent with the goals of this plan.

(2) Fall-run Chinook

Fall-run Chinook salmon begin migration to natal freshwater streams in late summer and early fall. These fish migrate as mature adult fish and spawn in gravel redds within a few days or weeks after arrival at spawning grounds. While the duration of juvenile freshwater inhabitance is significantly shorter (only 1-7 months) than that of spring-run Chinook (3 to 15 months), the habitat requirements are very similar (Moyle, 2002). The fall-run Chinook are the most abundant of the Central Valley Chinook salmon, yet their habitat range is also dwindling due to migration barriers. Enhancing the floodplain habitat so that it can benefit fall-run Chinook salmon is consistent with the goals of this plan.

d) Steelhead

Dams have also separated Central Valley steelhead from much of its former range. One of the documented remaining populations is found in the lower Yuba River, a major tributary to the Feather River. Central Valley steelhead is a cold water species that requires adequate gravel composition for spawning. Central Valley steelhead spend about half their lives in freshwater streams, which may account for the dramatic effect river regulation and habitat loss have had on this fish species. Enhancing the floodplain habitat so that it can benefit steelhead is consistent with the goals of this plan.

C. Targeted Avian Species

Riparian ecosystems harbor the most diverse bird communities in the arid and semi-arid portions of the western United States (Knopf et al. 1988, Dobkin 1994, Saab et al. 1995), and may also provide the most important avian habitat in California (Manley and Davidson 1993). Therefore, a restored site will provide vital habitat and conditions for neo-tropical migratory birds, western yellow billed cuckoos, and other riparian dependent avian species (Figure 4). The benefits to terrestrial species are realized relatively quickly. Increases in species richness and numbers of neo-tropical migratory birds may be seen within three years of restoration (Geupel et al., 1997; RHJV, 2004).

Figure 4. Habitat Value of Native Riparian Plants (RHJV 2004)

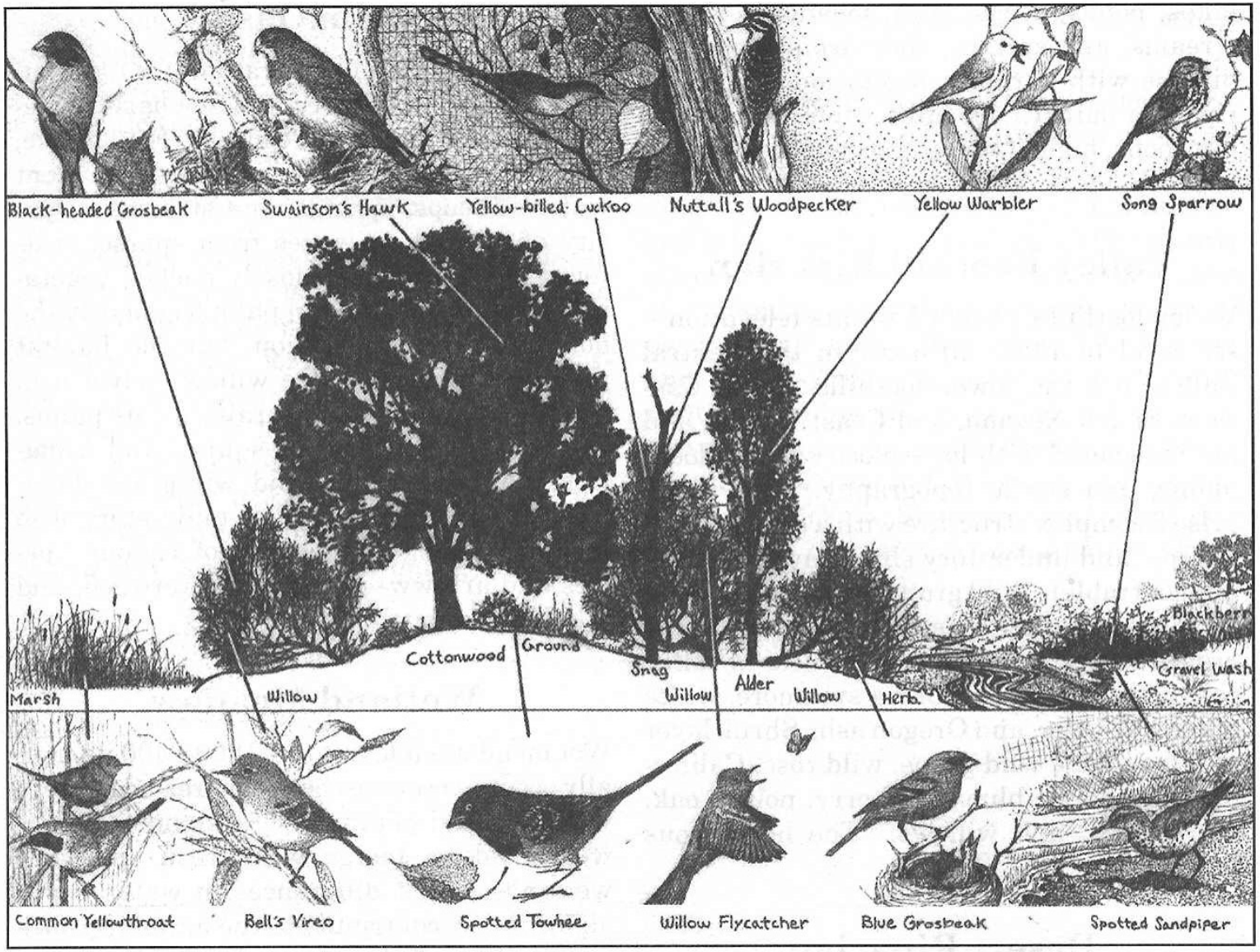

D. Mitigation

Although 14.9 acres are required, 20 acres are designed to mitigate impacts to elderberry shrubs during the construction of the setback levee. Table 5 summarizes the number of stems likely to be impacted by the project and describes the specific replacement ratios and conservation measures required by USFWS (1999a). Accidental damage or removal of blue elderberry plants at O'Connor Lakes will be covered under the pre-existing 2005 USFWS Biological Opinion and Incidental Take Statement Memorandum of Understanding (2005 MOU) (USFWS 2009). The 2005 MOU allows CDFG and CDWR to remove elderberry shrubs for the purposes of flood control projects as long as a baseline of 130 plants is maintained (CDFG and CDWR 2005).

Table 5. Elderberry Mitigation Requirements[1,2] for Feather River Setback Levee and Habitat Enhancement Project at Star Bend (Stillwater Sciences 2008), Sutter County, California.

Stem size	Number of Stems[3]	Exit hole?	Seedling ratio	Number of replacement elderberries	Associate native ratio	Number of associate seedlings
1"-3"	202	Yes	4:1	808	2:1	1608
3"-5"	50	Yes	6:1	300	2:1	600
>5"	1	No	4:1	4	1:1	4
>5"	12	Yes	8:1	96	2:1	192
TOTAL	265			1,208		2,404

Source: USFWS 2009

E. Primary Project Area

Although the planting will be done in phases, the description of plant communities will be discussed here as a whole. Based on varying biological conditions of the site and hydraulic objectives, three plant communities are proposed. We suggest planting a combination of Great Valley Mixed Riparian Forest, Riparian Scrub Shrub and grassland communities (Figure 5, Table 6). Tree and shrub densities and compositions (Tables 7-12) will vary across the site to address mitigation and wildlife habitat goals and complement the vegetation communities designed and implemented within the O'Connor Lakes Unit. An integral component of the design is a native grass understory which is incorporated into the woody species plantings on 84% of the site.

Figure 5 shows the locations of the proposed vegetation associations. To translate the vegetation associations to the field, the project area is to be made up of smaller planting units (a 5-row by 10-plant area), referred to as "tiles." The project area can be divided into a grid overlaying the site, with each square on the grid representing a tile (Appendix II). Vegetation is assigned for each area of the grid, based on site conditions, mitigation requirements, or wildlife needs. The Holland/CNDDB classification system (Holland 1986) was used to communicate the vegetation composition for each area. The tiles describe plant composition (what plants are included in an area) and arrangement (how the plants are located relative to each other). Arrangements allow development of habitat features (for example, grouping trees to create dense groves for western yellow-billed cuckoos, or grouping small shrubs together to mimic a large shrub, for cover-

dependent wildlife). Conventional ecological theory holds that high plant species diversity and structural diversity translates to high wildlife diversity. Thus, alternative vegetation associations will be embedded into the design.

Table 6. Summary of Overall Proposed Plant Species at the Feather River Setback Levee and Habitat Enhancement Project at Star Bend, Sutter County, California.

Total Acres: 53.4

Common name	Scientific name	Species composition (%)	Density (plant/acre)	Total Number
Arroyo willow	*Salix lasiolepis* Benth.	6.6	16.0	859
Box elder	*Acer negundo* L.	0.5	1.3	68
Buttonbush	*Cephalanthus occidentalis*	5.7	14.0	751
California blackberry	*Rubus ursinus* Chain. & Schldl.	25.9	63.0	3,391
Coyote brush	*Baccharis pilularis* DC.	5.4	13.2	712
Elderberry	*Sambucus mexicana*	15.9	38.7	2,082
Fremont cottonwood	*Populus fremontii* S.Watson ssp. *fremontii*	0.5	1.3	68
Gooding's black willow	*Salix gooddingii* C.R. Ball	0.3	0.6	34
Mule fat	*Baccharis salicifolia*	4.4	10.8	580
Oregon ash	*Fraxinus latifolia Benth*	0.8	1.9	102
Sandbar (narrow-leaf) willow	*Salix exigua* Nutt.	2.5	6.0	325
Valley oak	*Quercus lobata* Nee	1.3	3.2	171
Western sycamore	*Platanus racemosa* Nutt.	1.3	3.2	171
Wild rose	*Rosa californica* Cham. & Schldl.	28.8	69.9	3,763
TOTAL		**100.0**	**243.1**	**13,077**

Figure 5. Planting Associations for the Feather River Setback Levee and Habitat Enhancement Project at Star Bend, Sutter County, California.

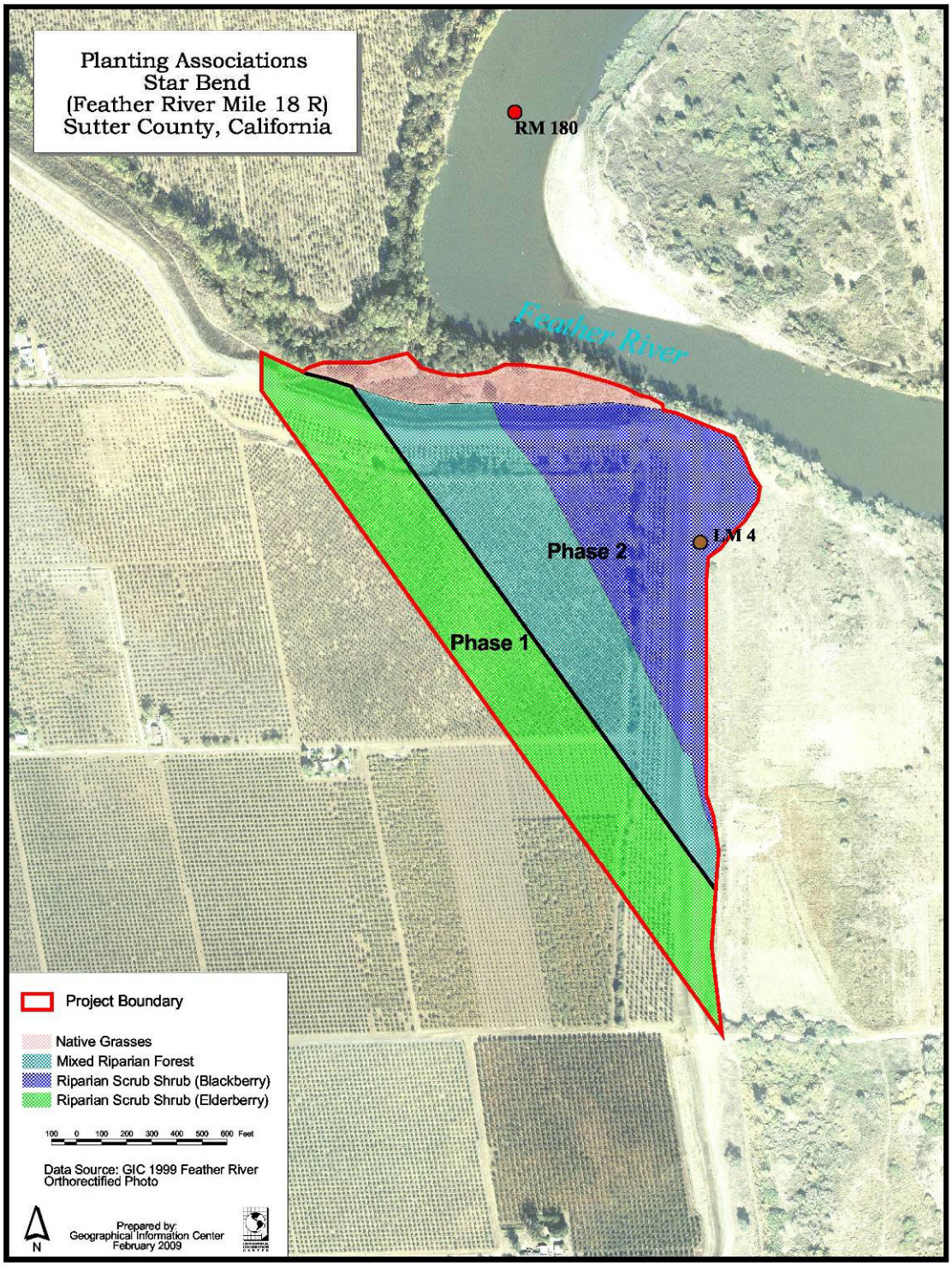

1. Riparian Scrub Shrub (Elderberry)

The habitat enhancement project will incorporate approximately 20 acres of mitigation habitat for VELB, which is designed with a Riparian Scrub Shrub (Elderberry) association (RSE) (Table 7) that is dominated by blue elderberry and will contain large shrubs of blue elderberry that have been excavated from construction impact areas and transplanted in accordance with guidelines previously established by the U.S. Fish and Wildlife Service (USFWS) (Appendix III). The purpose of transplanting is to transfer healthy, mature, blue elderberry individuals to the mitigation area to facilitate the recolonization of VELB to the project site. In addition, the area will be planted with elderberry seedlings and associates (other woody species) in accordance with USFWS guidance. All elderberry shrubs will be planted a sufficient distance from project levees to ensure that elderberries will not be disturbed by, or interfere with, levee maintenance activities.

This community is designed with a 100-foot wide buffer zone that will not include California blackberry or elderberry seedlings. This is intended to prevent the spread of these shrubs onto the levee thereby reducing future maintenance costs. A native grass understory will be planted between the planting rows over the entire 20 acres.

Table 7. Proposed Composition of Riparian Scrub Shrub (Elderberry) at the Feather River Setback Levee and Habitat Enhancement Project, Sutter County, California.

Estimated Acres: 20.0[1]

Common name	Scientific name	Species comp. (%)	Density (plant/acre)	Total Number
Arroyo willow	*Salix lasiolepis* Benth.	5.4	10.9	217
Buttonbush	*Cephalanthus occidentalis*	5.5	11.1	222
California blackberry	*Rubus ursinus* Chain. & Schldl.	7.8	15.8	316
Coyote brush	*Baccharis pilularis* DC.	13.0	26.2	524
Elderberry	*Sambucus mexicana*	36.5	73.8	1,475
Mule fat	*Baccharis salicifolia*	8.9	17.9	358
Sandbar (narrow-leaf) willow	*Salix exigua* Nutt.	3.4	6.9	137
Wild rose	*Rosa californica* Cham. & Schldl.	19.6	39.6	791
TOTAL		**100.0**	**202.2**	**4,040**

The total number of plantings is designed to meet the required 3,612 elderberry and associated species mitigation plantings, plus additional plantings to ensure adequate survival rates.

2. Great Valley Mixed Riparian Forest

The Great Valley Mixed Riparian Forest (MRF) (Table 8) will be planted primarily in the proposed borrow area within the setback project and will complement the existing mixed riparian forest dominated by cottonwoods in the levee toe ditch. This community will be comprised of a mixture of fast-growing species (cottonwood and willows) and slow-growing species (sycamore and oak), which provide short-term and long-term wildlife habitat. The MRF community will be planted with an open design to enhance the edge effect for wildlife. It will be planted in hedgerows, which consist of five planting rows twenty feet apart with breaks of one hundred feet between each hedgerow. The open spaces and all row centers will be planted with native grasses.

Table 8. Proposed Composition of Great Valley Mixed Riparian Forest at the Feather River Setback Levee and Habitat Enhancement Project, Sutter County, California.

Estimated Acres: 15.5

Common name	Scientific name	Species comp. (%)	Density (plant/acre)	Estimated Number
Arroyo willow	*Salix lasiolepis Benth.*	6.0	6.6	102
Box elder	*Acer negundo L.*	4.0	4.4	68
Buttonbush	*Cephalanthus occidentalis*	4.0	4.4	68
California blackberry	*Rubus ursinus Chain. & Schldl.*	24.0	26.4	409
Coyote bush	*Baccharis pilularis DC.*	2.0	2.2	34
Elderberry	*Sambucus mexicana*	4.0	4.4	68
Fremont cottonwood	*Populus fremontii S.Watson ssp. fremontii*	4.0	4.4	68
Gooding's black willow	*Salix goodingii C.R. Ball*	2.0	2.2	34
Mule fat	*Baccharis salicifolia*	4.0	4.4	68
Oregon ash	*Fraxinus latifolia Benth*	6.0	6.6	102
Sandbar (narrow-leaf) willow	*Salix exigua Nutt.*	2.0	2.2	34
Valley oak	*Quercus lobata Nee*	10.0	11.0	171
Western sycamore	*Platanus racemosa Nutt.*	10.0	11.0	171
Wild rose	*Rosa californica Cham. & Schldl.*	18.0	19.8	307
	TOTAL	**100.0**	**110.0**	**1,705**

3. Riparian Scrub Shrub (Blackberry)

The Riparian Scrub Shrub (Blackberry) association, dominated by densely planted California blackberry and California rose (Table 9), will serve as a transition from native grasses to mixed riparian forest. The shrubs that comprise this plant association provide year round shrubby cover, produce high quantities of fruit and seeds, and attract insects. Moreover, this plant community will serve to protect the project area from erosive overbank flow; especially aiding in protecting cultural resources from disturbance. The open spaces and all row centers will be planted with native grasses.

A separate design within this community is planned for a cultural resources area located in the project area. California rose and California blackberry will be planted at a very high density (Table 10). Shrubs planted at this density should close in on themselves within a year and protect the area from disturbance.

Table 9. Proposed Composition of Riparian Scrub Shrub (Blackberry) at the Feather River Setback Levee and Habitat Enhancement Project, Sutter County, California

Estimated Acres: 15.9

Common name	Scientific name	Species Comp. (%)	Density (plant/acre)	Estimated Number
Arroyo willow	*Salix lasiolepis* Benth.	14.0	33.9	539
Buttonbush	*Cephalanthus occidentalis*	12.0	29.0	462
California blackberry	*Rubus ursinus* Chain. & Schldl.	24.0	58.1	923
Coyote bush	*Baccharis pilularis* DC.	4.0	9.7	154
Elderberry	*Sambucus mexicana*	14.0	33.9	539
Mule fat	*Baccharis salicifolia*	4.0	9.7	154
Sandbar (narrow-leaf) willow	*Salix exigua* Nutt.	4.0	9.7	154
Wild rose	*Rosa californica* Cham. & Schldl.	24.0	58.1	923
	TOTAL	**100.0**	**242.0**	**3,847**

Table 10. Proposed Composition of Riparian Scrub Shrub (Blackberry) (Closed) at the Feather River Setback Levee and Habitat Enhancement Project, Sutter County, California

Estimated Acres: 2.0

Common name	Scientific name	Species Comp. (%)	Density (plant/acre)	Estimated Number
California blackberry	*Rubus ursinus* Chain. & Schldl.	50.0	871.2	1,742
Wild rose	*Rosa californica* Cham. & Schldl.	50.0	871.2	1,742
	TOTAL	**100.0**	**1,742.4**	**3,484**

4. Native Grasses

The planting of native grass minimizes the invasion of non-native species, enhances wildlife habitat, limits erosion, and provides less hazardous fire conditions. Soil conditions indicate that native grasses will do well on the project site. A native grassland will be planted in the area just north of the existing levee (Figure 5). Along with the benefits listed above, the grassland will also provide foraging habitat for Swainson's hawk. Grasses will also be planted as understory between the planting rows and hedgerows in all of the plant communities. The mosaic of grasses and woody species will provide nesting and cover areas as well as foraging areas for wildlife, maximizing the edge effect. Grasses will be planted over a total of approximately 42 acres which amounts to approximately 84% of the total project area.

Seed will be purchased from stock collected from the same ecoregion as the restoration project. The seeding rate will be approximately 13 pounds pure live seed (lbs pls) per acre, and seed will be planted with a no-till drill (Table 11). Native grass seeding will be applied in November or December after the first rains.

Table 11. Proposed Composition of Native Grass Mix at the Feather River Setback Levee and Habitat Enhancement Project, Sutter County, California.
Estimated Acres: 47.3

Common Name	Scientific Name	Rate (lbs pls/acre)	Estimated Amount[1] (lbs)
Blue wildrye	*Elymus glaucus*	3	126
Creeping wildrye	*Leymus triticoides*	4	168
Meadow barley	*Hordeum branchyantherum*	2	84
Purple needlegrass	*Nasella pulchra*	4	168
Total		**13**	**546**

[1]Total pounds to purchase will be dependent upon purity of seed and percent germination. Consult with nursery for amount to order.

F. O'Connor Lakes Unit Borrow Areas

After borrow areas are filled with material from the decommissioned levee and graded to pre-project elevations (approximately 41–45 ft), the three borrow areas at the O'Connor Lakes Unit will be revegetated with a similar design specified in the O'Connor Lakes Restoration Plan (River Partners 2006). The planting palette includes native grasses and an herbaceous understory.

1. Native Grasses

Disturbed areas in Borrow Area 2 will be revegetated with creeping wildrye (*Leymus triticoides*) plugs. This area carries the greatest quantity of overbank flows within the O'Connor Lakes Unit. Creeping wildrye is rhizomatous and well-suited to sandy soils. This area will be planted at a density of 2,720 plugs/acre (Table 12). To increase species and structural diversity, deer grass (*Muhlenbergia rigens*) plugs will be planted at a density of 2,500 plugs/acre. The total amount of creeping wildrye and deer grass plugs will depend on the amount of area disturbed.

Table 12. Proposed Composition of Native Grasses for Borrow Areas, Feather River Setback Levee and Habitat Enhancement Project at Star Bend, Sutter County, California.

Common name	Scientific name	Location	Density plugs/acre
Creeping wildrye	*Leymus triticoides*	Borrow Area 2	2,720
Deer grass	*Muhlenbergia rigens*	Borrow Area 2	2,500

2. Herbaceous Understory

Borrow Area 1, where vegetation is annually cleared by DWR for flow conveyance, and Borrow Area 3, where material was previously removed, will be revegetated with mugwort at a rate of 2 lbs pls/acre. The total amount of mugwort seed needed will depend on the amount of area disturbed.

G. Implementation of Phase I

The 20-acre Phase I planting consists entirely of elderberry mitigation plantings, including transplants, and the RSE community. This community includes a buffer zone planting that excludes California blackberry and elderberry. It will be planted in a strip 100 feet wide running the length of the setback levee. These communities provide the native associate plants required with the on-site mitigation for impacted elderberry

shrubs. The borrow areas on the O'Connor Lakes Unit will be revegetated with native grasses and other herbaceous species.

1. Pre-Construction Activities

a) Orchard Removal

The existing plum orchard will be removed prior to onset of levee degradation and construction activities. The ecological benefits provided by the current plum orchards are expected to be surpassed by the rapid wildlife responses observed after the first year of restoration.

b) Elderberry Transplanting

Prior to the initiation of any levee setback construction activities, all blue elderberry plants with one or more stems measuring ≥ 1.0 inch in diameter at ground level that can not be avoided will be transplanted to a predetermined site that is acceptable to USFWS. LD1 proposes to transplant all unavoidable shrubs to an on-site location, as depicted in Figure 2. Blue elderberry transplants will be planted in rows oriented parallel to the setback levee; rows will be spaced 20 feet apart with 11 feet spacing within each planting row. These transplanted individuals, as well as all other blue elderberry plants within 100 feet of Project activities, will be protected as described in the Conservation Guidelines (USFWS 1999). At USFWS discretion, a plant that is unlikely to survive transplantation because of poor condition or location, or a plant that will be extremely difficult to move because of access problems, may be exempted from transplantation. In cases where transplantation is not possible, mitigation ratios may be increased.

If possible, plants will be transplanted during their dormant season (approximately November through the first two weeks in February, after they have lost their leaves). This will reduce shock to the plant and increase transplantation success. If transplantation occurs during the growing season, increased mitigation ratios may apply. A qualified biologist (monitor) will be on site during transplantation to ensure that no unauthorized take of valley elderberry longhorn beetle occurs. If unauthorized take occurs, the monitor will have the authority to stop work until corrective measures have been completed. The monitor will immediately report any unauthorized take of the beetle or its habitat to USFWS and CDFG.

Transplanting Procedure

- The plant will be cut back 3 to 6 feet from the ground or to 50% of its height (whichever is taller) by removing branches and stems above this height. The trunk and all stems with diameters measuring 1 inch or greater at ground level will be replanted. Any leaves remaining on the plant should be removed. A hole will be excavated of adequate size to receive the transplant.
- The plant will be excavated using backhoe, excavator, front end loader, or other suitable equipment, taking as much of the root ball as possible, and replanting immediately at the designated area. If the plant is to be transplanted off site, the root ball will be secured with wire and wrapped with burlap. Care will be taken to ensure that the root ball remains moist. The root ball will be planted so that its top is level with the existing ground. The soil will be compacted sufficiently so that settlement does no occur.

- A basin will be constructed around the transplant and irrigated after planting.
- The planting area will be at least 1,800 ft^2 for each elderberry transplant. As many as five additional blue elderberry plantings (cuttings or seedlings) and up to five associated native species plantings will also be planted within the 1,800 ft^2 area with the transplant. Up to twenty stems greater than one inch are permitted per basin, forming a cluster design. These clusters will require large basins and will be oriented in the rows mentioned above. Water basins will have a continuous berm measuring approximately 8 inches wide at the base and 6 inches high.
- Soil should be saturated with water. Fertilizers and other potentially deleterious substances will not be used on or around the plants.
- Monitoring of the plants will occur to ascertain whether additional watering is necessary.

2. Post-Construction Site Preparation

Elderberry transplanting will occur prior to the setback levee construction. The remaining associate plantings of Phase I will not be installed until setback levee construction is complete. The transplanted elderberries will be fenced with construction fencing. Once the setback levee construction is completed, the entire project area will be disked and floated to smooth the surface for irrigation and tractor operations (mowing and spraying). Existing native plants will be protected with fencing to minimize potential damage from machine operation. Prior to these activities, operations will be initiated to begin eradication of non-native species.

3. Row Orientation and Plant Spacing

The Feather River channel flows north to south along the northern edge of the project, but then makes a 90-degree turn and flows east to west. All woody trees and shrubs will be planted in rows that will be oriented approximately parallel to flood flows and parallel to the newly constructed setback levee.

Details of plant orientation and spacing are as follows:

- Most of the planting areas will be 20 feet apart; with in-row plant spacing at 11 feet. Rows will be curved and generally follow a northwest-southeast orientation, paralleling the new setback levee.
- The density of the site will be 198 plants per acre. In addition, to allow flood conveyance, a high proportion of the plant communities will be comprised of flexible species such as California blackberry and California wild rose.

4. Plant Material Collection and Propagation

To preserve any ecotype differences, plant material will be collected from vegetation as near as possible to the project site. Table 13 summarizes the types of plant propagation material to be used for woody species. Field cuttings of cottonwood and willows will be collected in January or February when the trees are dormant. A lead time of 12 to 18 months is required from time of seed collection to transplant maturity for plants grown in containers at a nursery. Seeds for the herbaceous understory will be bought at local nurseries or collected from sources near the project site.

Table 13. Standard planting materials and times for woody species

Species	Nursery Grown		Direct Planting		Standard Planting Time (primary method)
	Seeds	Cuttings	Seeds	Cuttings	
Arroyo willow	2	2		1	Feb-Mar
Black willow	2	2		1	Feb-Mar
Box elder	1				Oct-Apr
Buttonbush	1	2			Oct-Apr
California blackberry	1	2		2	Oct-Apr
Coyote bush	1	1		2	Oct-Apr
Dutchman's pipevine	1	2			Oct-Apr
Elderberry	1				Oct-Apr
Fremont cottonwood	2	2		1	Feb-Mar
Oregon ash	1				Oct-Apr
Red willow	2	2		1	Feb-Mar
Sandbar willow	2	2		1	Feb-Mar
Western sycamore	2	1			Oct-Apr
Wild rose	1	2		2	Oct-Apr
Valley oak	2		1		Nov-Dec
White alder	1	2			Oct-Apr

1 – primary method, 2 – secondary method.

5. Plant Installation

A computer database system provides the link between the design and field implementation. Each planting location receives a computer-generated vinyl label that lists its row and plant number, location, and species name and number code. This system connects the vegetation series to specific field conditions (e.g., flood-tolerant species in wet areas) or management objectives (e.g., dense vegetation to serve as a wildlife screen). The labels are installed on stakes in the field prior to planting, which communicates the plan to the planting crew. All plants are number coded and workers can match plants with the proper label.

Any deviations will be recorded and updated in the database. Plant deviations from the original design (e.g., planting an elderberry shrub at a valley oak location) can be recorded during the first census.

Planting efforts will focus on the woody plants in the first year with the native herbaceous understory planted in year 2. Table 14 provides a timeline for implementation of native woody and herbaceous species planting for Phase I.

Table 14. Calendar of planting implementation for Phase I of the Feather River Setback Levee and Habitat Enhancement Project at Star Bend, Sutter County, California.

Date	Trigger	Action
Spring Year 1	Weed germination, soil moisture for field activities.	Maintain complete weed control and prepare a seed bed through mowing, spraying, and disking when weeds are young.
Fall Year 1	Planting of woody species.	
Fall Year 2 (typically November)	After about an inch of rain, when the winter weeds "flush" (germinate).	Spray weeds (Roundup) to give the natives a good start. Broadcast native understory seeds. Due to size of the seeds, mix with an inert carrier (i.e. rice hulls) to distribute the seeds across the field.
Early Spring Year 3	Assessment of weed pressure in previous year, appearance of annual weeds.	Control annual weeds with Roundup if weather conditions allow.
Spring Year 3 to end of project	Weeds taller than 8", or if weeds threaten to shade natives.	The objective is to increase germination and vegetative growth (and not necessarily seed production) of the native understory. Well-timed mowing will reduce the competition with non-native weeds.

a) Woody species

Plant protectors (one-quart milk cartons) should be installed with about 2 inches of wood shavings applied as mulch to hold soil moisture and minimize weed growth. These help protect the plant from desiccation, herbivory, and drift from herbicide applications.

Once site preparation is complete and the irrigation systems are in place, plant installation can begin. The planting of woody species begins with the staking and labeling of each plant location. The location of woody species is expressed by the planting tiles (Appendix V).

Approximately 4,000 woody plants will be planted within the Phase II project area (Table 7). Additional details for the planting of woody species include the following:

- **Initial planting:** Initial planting will occur in the fall (oaks and nursery stock) and will continue through winter and spring (direct cuttings). By spring, the initial planting should be complete.
- **Replanting:** A replant of any missing or dead plants will occur after survivorship is calculated from the census completed in year 1. The plant design approach (over-planting) will minimize future replanting efforts in years 2 and 3.

Acorns will be planted directly into the field during the fall. Cottonwood and willow cuttings will be planted in February and March. Nursery material will be planted in the spring or fall when weather conditions are cool and moist.

H. Implementation of Phase II

Phase II, an additional 32.1 acres, will be implemented for further restoration and expansion of riparian habitat that may be applied as mitigation for the future regional levee improvement projects and/or the Sutter County Habitat Conservation Plan.

1. Site Preparation

The project area will be disked and floated to smooth the surface for irrigation and tractor operations (mowing and spraying). Existing native plants will be protected with fencing to minimize potential damage from machine operation. Prior to these activities, operations will be initiated to begin eradication of non-native species.

2. Row Orientation and Plant Spacing

The Feather River channel flows north to south along the northern edge of the project, but then makes a 90-degree turn and flows east to west. All woody trees and shrubs will be planted in rows that will be oriented approximately parallel to flood flows and parallel to the newly constructed setback levee.

Details of plant orientation and spacing are as follows:

- The planting rows will be 20 feet apart; with in-row plant spacing at 11 feet, with the exception of the Riparian Scrub Shrub (Blackberry) association, where in-row plant spacing will be 5 feet. Rows will be curved and generally follow a northwest-southeast orientation, paralleling the new setback levee.
- A significant portion of the site will be planted in hedgerows which will consist of five rows spaced 20 feet apart. There will be a 100 foot break between each hedgerow.
- Plant densities will vary across the project area to accommodate physical and biological parameters. The density of the site will range from 110 plants per acre in the MRF Open community to 1,742 plants per acre in the high-density planting in the cultural resource area, with an overall density of 267 plants per acre. In addition, to allow flood conveyance, a high proportion of the plant communities will be comprised of flexible species such as California blackberry and California wild rose.

3. Plant Installation

A computer database system provides the link between the design and field implementation. Each planting location receives a computer-generated vinyl label that lists its row and plant number, location, and species name and number code. This system connects the vegetation series to specific field conditions (e.g., flood-tolerant species in wet areas) or management objectives (e.g., dense vegetation to serve as a wildlife screen). The labels are installed on stakes in the field prior to planting, which communicates the plan to the planting crew. All plants are number coded and workers can match plants with the proper label.

Any deviations will be recorded and updated in the database. Plant deviations from the original design (e.g., planting an elderberry shrub at a valley oak location) can be recorded during the first census.

Planting efforts will focus on the woody plants in the first year with the native herbaceous understory and native grasses planted in year 2. Table 16 provides a timeline for implementation of native woody and herbaceous species planting for Phase II.

Table 16. Calendar of planting implementation for Phase II of the Feather River Setback Levee and Habitat Enhancement Project at Star Bend, Sutter County, California.

Date	Trigger	Action
Spring Year 1	Weed germination, soil moisture for field activities.	• Maintain complete weed control and prepare a seed bed through mowing, spraying, and disking when weeds are young.
Fall Year 1	Planting of woody species.	
Fall Year 2 (typically November)	After about an inch of rain, when the winter weeds "flush" (germinate).	• Spray weeds (Roundup) to give the natives a good start. Directly seed native grass using a no till drill. Mix the seed prior to planting (no observed difference between mixed and separate seeding). Apply 30 pounds/acre of 16-20-0 fertilizer (no observed difference, but fertilizer may benefit new seedlings under extremely cold weather). • Broadcast native understory seeds. Due to size of the seeds, mix with an inert carrier (i.e. rice hulls) to distribute the seeds across the field.
Early Spring Year 3	Assessment of weeds in previous year, appearance of broadleaf plants.	• Control broadleaf plants (2,4-D) in native grass area if woody plants are dormant and weather conditions comply. • Control annual weeds with Roundup in areas broadcasted with native understory.
Spring Year 3 to end of project	Weeds taller than 8", or if weeds threaten to shade natives.	• The objective is to increase germination and vegetative growth (and not necessarily seed production) of native grasses and native understory. Well-timed mowing will reduce the competition with non-native weeds, and may encourage vegetative growth (such as tillering) of the native grass.

a) Woody species

Plant protectors (one-quart milk cartons) should be installed with about 2 inches of wood shavings applied as mulch to hold soil moisture and minimize weed growth. These help protect the plant from desiccation, herbivory, and drift from herbicide applications.

Once site preparation is complete and the irrigation systems are in place, plant installation can begin. The planting of woody species begins with the staking and labeling of each plant location. The location of woody species is expressed by the planting tiles (Appendix V).

Approximately 9,300 woody plants will be planted within the Phase II project area (Tables 8-10). Additional details for the planting of woody species include the following:

- **Initial planting:** Initial planting will occur in the fall (oaks and nursery stock) and will continue through winter and spring (direct cuttings). By spring, the initial planting should be complete.
- **Replanting:** A replant of any missing or dead plants will occur after survivorship is calculated from the census completed in year 1. The plant design approach (over-planting) will minimize future replanting efforts in years 2 and 3.

Acorns will be planted directly into the field during the fall. Cottonwood and willow cuttings will be planted in February and March. Nursery material will be planted in the spring or fall when weather conditions are cool and moist.

4. Native Grasses

Seed will be purchased from stock collected from the same ecoregion as the restoration project. The seeding rate (Table 11) will be approximately 13 pounds pure live seed (lbs pls) per acre, applied with 30 pounds/acre of 16-20-0 fertilizer, and planted with a no-till drill. Native grass seeding will be applied in November or December before the first rains.

In addition to native grass seeding, plugs of native grasses will be planted. Plugs are an especially important method for cultivating plants that do not reproduce well by seed (e.g. deer grass). Deer grass is a more drought-tolerant species that will be planted in Borrow Area 2 to increase species richness. Table 17 shows the recommendations for plug planting within the project.

Table 17. Summary of Native grass Plug-Planting for Borrow Areas of the Feather River Setback Levee and Habitat Enhancement Project at Star Bend, Sutter County, California.

Common name	Scientific name	Location	Density plugs/acre	Spacing
Creeping wildrye	*Leymus triticoides*	Borrow Area 2	2,720	4 ft x 4 ft
Deer grass	*Muhlenbergia rigens*	Borrow Area 2	2,500	Scattered clumps

IV. MAINTENANCE

This section provides field managers with technical details needed to implement the plant design. The subsections describe field layout and an approximate sequence of activities that will be carried out over the three-year term of the habitat enhancement project.

A. Weed Control

Weed control is necessary for the successful establishment of native plants and improvement of habitat. The weeds of greatest concern at the site are black mustard, yellow starthistle and pepperweed.

During the growing season, weeds along the planting rows should primarily be controlled by the timely spraying of Roundup® or a generic herbicide brand with glyphosate as the active ingredient. Rows will also be mowed with side mower and weed eater as needed. The aisles between the planted rows (centers) should be mowed or disked to minimize weed growth and propagation. Spraying and/or mowing

should be implemented every 3-6 weeks during the growing season for at least the first two years.

In areas to be planted with herbaceous species, spraying and mowing for an entire season before planting is recommended. Once the herbaceous species are planted, weed control methods will be mowing, possibly applying 2,4-D to control broad leaf pressure.

The restoration contractor will abide by county and state herbicide permitting and reporting requirements. Roundup® (glyphosate) and 2,4-D (for broad-leaf control in native grass planting) are likely to be the most commonly used herbicides on the project. Rodeo® (for areas adjacent to water bodies), Telar® (for pepperweed control), Poast® (for post-emergence control of annual grasses in herbaceous understory planting) and Garlon™ (for woody species control) may also be used.

B. Irrigation

Because of the dry summers typical of the climate in the area, irrigation will be required for plant establishment and survival. Irrigation should be applied with the goal that plants will become self-sufficient by the end of the third growing season.

In the first growing season, the rapidly growing seedlings have roots only in the surface (the top 1-2 feet) of the soil profile. The rooting zone must be kept moist through the season to ensure optimum growth and survival. Because of the sandy soils at the site and water table depths of over 20 feet, the soil moisture of the fields planted with woody species will need to be closely monitored. The intervals between irrigations are dependent upon soil texture, depth to water table, the weather conditions, and plant water stress. Because a mixture of species with different water demands is proposed, the plants must be carefully observed to maintain a balance of soil moisture that is acceptable for xeric species like valley oak and elderberry as well as more mesic species like cottonwood and willow.
Prior to project implementation, a more detailed irrigation design will be developed. All irrigation water will be provided by an existing well located in the O'Connor Lakes Unit, near the midpoint of the eastern edge of the project area. The mainline will run west from the well.

Based on knowledge of the site and plant design, the following are expected to be the requirements for the system:

- The plant spacing throughout most of the restoration and mitigation areas will be 20-foot-wide rows with a 11-foot distance down the planting rows, and rows planted in an approximate east-west direction. Shrub clusters will be planted with 20-foot-wide rows with a 5-foot distance down the rows. Levee remnants will be planted with 10-foot-wide rows with a 5-foot distance down the rows.
- Planting rows will curve and run parallel to flood flows. The irrigation system will utilize existing wells as water sources.

- The drip-line emitters will be spaced, with three emitters per plant 12 inches apart. The design flow will be 0.6 gallons per hour per emitter (1.8 gallons per plant per hour).

Within selected areas, soil-moisture sensors will be placed 1) near the Bear and Feather Rivers, 2) in the middle of the setback levee area, 3) in the middle of the grassland, 4) in the middle of the removed orchard, and 5) on top of the levee remnants. Sensors will be installed at depths of 12 and 36 inches.

In conjunction with these measurements, plant stress observations before and after irrigation periods will be necessary to critically judge the timeliness and effectiveness of irrigation. Measurements provide the most direct assessment of soil moisture. Table 18 provides the irrigation goals of the project.

Table 18. Irrigation goals for the Feather River Setback Levee and Habitat Enhancement Project at Star Bend, Sutter County, California.

Year	Goal	Frequency
1	Keep the shallow roots (1-2 feet) of young plants moist to ensure optimum growth and survival.	Utilize soil moisture probes to monitor and maintain moisture throughout the soil column.
2	Encourage deep rooting and enhance field access to facilitate weed control.	Deliver less frequent but longer irrigations.
3	Encourage deep rooting and enhance field access to facilitate weed control.	Continue with long irrigations and extend the period between irrigations.

The strategy for the second and third year is to train the roots to grow deep. Roots at depth (5-15 feet) will need less water and may be able to tap into the water table on the site and outcompete more shallow-rooted weeds. Less frequent, deep watering will encourage roots to grow deeper, well below the roots of the weeds, allowing the tree exclusive use of this deep moisture. As the tree's roots grow deeper, the times between irrigations become longer; this allows the soil surface layers to dry, thereby reducing weed vigor.

We anticipate that the well-drained, sandy soils, and relatively deep groundwater present on the site, will require frequent irrigations and careful observation of water stress. These areas may dictate the frequency of watering on the site. Field managers should use a combination of methods including evapotranspiration estimates, soil probes, gypsum blocks, and plant water stress signs to assess soil moisture and alter the irrigation regime.

C. Herbivore Control

A number of measures can help control or minimize the effects of herbivores on young plants (Table 19). Cultural practices such as mowing or spraying can discourage most of these herbivores. One of the advantages of active restoration is that more plants are planted than the herbivores can eat. Some damage by herbivores is tolerable and should not impact the success of the planting.

D. Flood and Fire Contingencies

All stockpiled material, cleared trees and brush, and equipment should be removed from the site during the flood season (November 1 to April 15). In the event of a flood, flood debris will be cleared from the site following the flood season.

Throughout the implementation of the project, the restoration contractor should periodically mow between rows and clusters, and along the perimeter of project areas, to reduce potential fire hazards.

Table 19. Summary of Herbivore Control Methods at the Feather River Setback Levee and Habitat Enhancement Project at Star Bend, Sutter County, California.

Herbivore	Type of Damage	Comment on measure(s) or plant response
Beaver	Cut down woody species to build dams	Dismantle dams or, if damage becomes severe, herbivore removal Woody species can stump sprout
Deer	Browsing sapling Use trees to rub velvet off antlers	Install heavy-gauge metal hoops and garlic capsules or other deterrent. Saplings can resprout
Ground Squirrels (*Otospermophilus beecheyi*)	Dig up and shred plants and protectors. Eat the bark of willow and cottonwood saplings and limbs.	Flooding or disking can reduce populations.
Pocket Gophers (*Thomomys bottae)*	Eat root systems (probably killing more saplings than any other vertebrate pest).	Control of weed cover allows predators to hunt gophers. However, gophers can persist in an open, weed-free field. Frequent disking, weed mulch control, or flooding reduces populations. A variety of birds will prey on gophers if given the opportunity. Raptor perches and owl boxes may increase predation.
Rabbits and Hares	Browse early spring growth.	Most seedlings resprout.
Voles (*Microtus*)	Eat bark and cambium at the base of sapling, usually girdling the entire stem. Dig-up and eat recently planted acorns.	Saplings resprout, unless vole population is high. Voles live only in dense herbaceous (weed) cover and never stop moving when in the open to avoid predators. Remove dense weed cover through herbicides or mowing.

V. MONITORING AND REPORTING

Mitigation and riparian vegetation enhancement activities at the Project site will be monitored by LD1 and/or CDFG (or the restoration contractor) to determine if mitigation requirements and habitat enhancement goals and performance standards are being met. Annual monitoring of riparian vegetation establishment including natural native plant recruitment, nonnative plant recruitment, and plant development, will provide

guidance to LD1 and/or CDFG (or the restoration contractor) to determine if remedial actions are needed. Annual monitoring reports will be submitted in the fall of each year. If monitoring reveals that performance standards are not being met, remedial activities may be implemented.

Monitoring of the Phase I elderberry transplants and mitigation plantings (20 acres) will be conducted twice annually for ten consecutive years or for seven years over a fifteen year period following project completion, per USFWS (1999) mitigation monitoring requirements. Annual monitoring of the O'Connor Lakes component of Phase I as well as Phase II will be conducted for up to three years following planting. Details of both the elderberry and general riparian vegetation monitoring are detailed in the following sections.

A. Monitoring and Reporting of VELB Mitigation Area

A biologist will monitor elderberry transplants and associated native plants within the VELB mitigation area. The population of VELB, the general condition of the mitigation area, and the condition of the elderberry and associated native plantings in the conservation area will be monitored over 10 consecutive years following the survey and monitoring procedures listed in the Conservation Guidelines for the Valley Elderberry Longhorn Beetle (USFWS 1999). The monitoring and reporting requirements are summarized in Table 20 at the end of this section.

1. Annual Surveys

Each year during the 10-year monitoring period, a minimum of two site visits between February 14 and June 30 will be made by a qualified biologist. According to the guidelines, the surveys must include the following:

- A population census of the adult beetles, including the number of beetles observed, their condition, behavior, and their precise locations. Visual counts must be used; mark-recapture or other methods involving handling or harassment must not be used.
- A census of beetle exit holes in elderberry stems, noting their precise locations and estimated ages.
- An evaluation of the elderberry plants and associated native plants on the site, and on the conservation area, if disjunct, including the number of plants, their size and condition.
- An evaluation of the adequacy of the signs and weed control efforts in the avoidance and conservation areas.
- A general assessment of the habitat, including any real or potential threats to the beetle and its host plants, such as erosion, fire, excessive grazing, off-road vehicle use, vandalism, excessive growth, etc.

A minimum survival rate of at least 60 percent of the elderberry plants and 60 percent of the associated native plants must be maintained throughout the monitoring period. Within 1 year of discovery that survival has dropped below 60 percent, failed plantings will be replaced to bring survivorship above the success criteria.

2. Reporting Requirements

Monitoring reports will be submitted annually by December 31 to USFWS and DFG. Copies of the report should be sent to:

- Chief of Endangered Species, Sacramento Fish and Wildlife Office, 2800 Cottage Way, W-2605, Sacramento, CA 95825
- Supervisor, Environmental Services, Department of Fish and Game, 1416 Ninth Street, Sacramento, CA 95814
- Staff Zoologist, California Natural Diversity Data Base, Department of Fish and Game, 1220 S Street, Sacramento, CA 95814.

Table 20. VELB Mitigation Monitoring and Reporting, Feather River Setback Levee and Habitat Enhancement Project.

Activity	Approximate Date or Frequency	Details
Qualitative Monitoring	Annually	• Evaluate the adequacy of the signs and weed control in the avoidance and mitigation areas. • Assess the habitat, including any real or potential threats to the beetle and its host plants, such as erosion, fire, excessive grazing, off-road vehicle use, vandalism, excessive growth, etc.
Quantitative Monitoring	Annually, minimum two surveys between February 14 and June 30.	• A population census of the adult beetles, including the number of beetles observed, their condition, behavior, and their locations. Visual counts must be used; mark-recapture or other methods involving handling or harassment must not be used. • A census of beetle exit holes in elderberry stems, noting their locations and estimated ages. • An evaluation of the elderberry plants and associated native plants in the mitigation area, including the number of plants, their size and condition.
Reporting	December 31	• Submit monitoring reports annually to USFWS and DFG.

B. Monitoring and Reporting of Riparian Vegetation Areas

Given the presence of good soils and potential exposure to frequent flooding, the project area should sustain rapid growth of restored riparian species throughout the life of the project implementation (approximately 3 years). An “over-planting” approach is used to rapidly establish native riparian species. Over-planting the project site will eliminate the need for any additional replanting efforts. The ultimate ecological objective for over-planting is that in time the area will thin out and create a complex of open canopy, dense forest, and dead snags, all of which provide benefits to wildlife.

It is anticipated that at the end of the 3-year establishment period, 70% survivorship of woody species will be attained. Over time, mortality based on differences of soil textures and water table depths will create areas of complex, open canopy, dense forest, and dead snags, all of which create habitat for wildlife.

1. Annual Surveys

At the end of the first growing season, the restoration contractor will conduct a complete census of all woody species planted. The data are best analyzed using a database to calculate survivorship, and to determine any changes to or omissions from the original

planting design. During years two and three, woody species plantings will be sampled to determine survivorship, growth, and coverage. Sampling of native grass and herbaceous understory plantings will also be conducted.

a) Census

At the end of the first growing season, a census noting survivorship for each location (alive, dead, or missing/not planted) will be conducted. The census allows for pattern analysis to examine the effects of soil, hydrology, or other factors affecting survivorship. During implementation, changes in the planting design are possible (or even desirable) and should be noted. Deviations in planting can also be recorded during the census. Results of the census will be used to determine progress towards performance criteria and replanting, if necessary.

b) Permanent Plot Sampling

After the initial census, subsequent monitoring (years 2 and 3) utilizes permanent plots to collect data on overall survivorship, height, and cover. The sampling procedure is modified for a restoration setting from protocol developed by Dr. Dave Wood (CSU, Chico) to establish permanent plots in riparian forests (personal communication). Some of the methods have been adapted from Elzinga *et al.* 1998. Comparison of survivorship between the sampling procedure and census indicates that sampling estimates are within 2% and provide additional information on cover and recruitment (results based on data from field 4 of the Ord Bend Unit, Sacramento River National Wildlife Refuge (River Partners 2003)). The sampling procedure may also be used to compare pre- and post-restoration vegetation, if the permanent plots are installed beforehand.

(1) Plot location and size

All samples are based on 20 m x 50 m (1,000 m^2) plots (quadrats) placed with the long axis oriented in a north-south direction. Permanent plot locations will be selected by stratifying the field and using the grid cell method (overlaying each field with a 20 m x 50 m grid) to select sampled plots. Plots that extend past the plantable area are generally rejected. In addition, we exclude locations that are not characteristic of that particular area. In general, a plot should be established every 5-20 acres. The plots serve as areas to collect information on woody, shrub, and herbaceous species (if desired).

Once each specific plot location is randomly selected, its field location will be permanently recorded at the upstream, inland corner of the plot. The position will be recorded with a GPS unit, and, in subsequent monitoring years, will be reestablished in the same position.

(2) Measurements

At each plot, cover and height measurements of all shrubs and trees inside the 20 m x 50 m plot will be recorded. To assess the survivorship of planted species, we will note their status: alive, dead, or missing (not planted). Because restoration activities often create conditions that favor the survivorship and natural recruitment of native plants, newly recruited native riparian woody species will also be recorded. The estimate of aerial cover of both trees and shrubs will be based on the longest diameter through the

horizontal plane of the plant's drip line, a thin line at which a drop of water would fall from the outward most oriented leaf.

c) Photo Points

In addition to quantitative surveys, the restoration contractor will take pre- and post-planting photographs to provide qualitative information on vegetation changes at the restoration site. The photographs will be taken annually at established photo points late in the growing season.

d) Herbaceous Species Monitoring

(1) Visual Plots

Native grass (monitored in May) and native forb (monitored in August) cover will be measured from visual estimates of 0.5m square plots randomly selected along a permanent transect. Ocular estimates of cover by native herbaceous understory species, general weeds, weeds of concern, and bare ground/litter will be recorded.

e) Annual Report

Annual reports will document the monitoring data, review site activities and recommend future management actions. Reports will also document observations related to natural processes related to flooding (erosion, sedimentation, and debris deposition).

.

VI. REFERENCES

Bayham, F.E. 2004. Record search for the O'Connor Lakes Project (I.C. File # D04-42). Northeast Center of the California Historical Resources Information System, Chico.

California Department of Fish and Game (1988). Lower Feather River Complex Operations and Maintenance Plan: Final Report Volume I. California Department of Fish and Game, Rancho Cordova.

CDFG and CDWR (California Department of Water Resources). 2005. Memorandum of understanding between the Department of Fish and Game and the Division of Flood Management of the Department of Water Resources for maintenance of flood control projects in the Sacramento River and Feather River wildlife areas. Effective 24 July 2006.

[CWHR] California Department of Fish and Game (2003) California Wildlife Habitat Relations. California Interagency Wildlife task Group. CWHR version 8.0 personal computer program. Sacramento, California.

Dopkin, D.S. 1994. Conservation and management of Neotropical migrant landbirds in the Northern Rockies and Great Plains. University of Idaho Press, Moscow.

EIP Associates. 2007. Draft Environmental Impact Report for the Feather River Setback Levee Project at Star Bend. Prepared for Levee District One of Sutter County. Sacramento, California. February 2007.

Elzinga, C.L., D.W. Salzer, and J.W. Willoughby. 1998. Measuring and monitoring plant populations. Bureau of Land Management (BLM Technical Reference 1730-1), Sacramento, California.

Geupel, G.R., Ballard, G., Nur, N., & King, A. 1997. Population status and habitat associations along riparian corridor of the Lower Sacramento River: Results from 1995 field season and summary of results 1993 to 1995. Point Reyes Bird Observatory, Stinson Beach, CA.

Holland, R.F. 1986. Preliminary descriptions of terrestrial natural communities of California. Natural Heritage Division, California Department of Fish and Game, Sacramento, CA..

Josselyn, M, Crawford, R., Kopec, D, Martindale, M., Duffield, J., and J. Callaway. 1988. Lower Feather River Complex Operations and Maintenance Plan for Abbott Lakes Ecological Reserve, O'Conner Lakes Ecological Reserve, and Lake of the Woods Wildlife Area. Final Report. Prepared for California Department of Fish and Game.

Knopf, F.L., R.R. Johnson, T.Rich, F.B. Samson, and R.C. Szaro 1988. Conservation of riparian ecosystems in the United States. Wilson Bulletin 100:272-284.

Lytle, D.J. (1988) Soil survey of Sutter County, California / United States Department of Agriculture, Soil Conservation Service The Service, Washington, D.C.

Manley and Davidson. 1993. A risk analysis of Neotropical migrant birds in California, U.S. Forest Service report, Region 5. San Francisco, CA

Moyle, P.B. 2002. Inland Fishes of California. University of California Press. Berkeley and Los Angeles, California.

Riparian Habitat Joint Venture. 2004. The riparian bird conservation plan: a strategy for reversing the decline of riparian associated birds in California. California Partners in Flight.

River Partners. 2006. O'Connor Lakes riparian restoration plan. Prepared for the California Department of Fish and Game and Wildlife Conservation Board, Sacramento, California.

Saab, V.A., C.E. Bock, T.D. Rich, and D.S.Dobkin 1995. Livestock grazing effects on migratory landbirds in western North America. Pages 311-353 in T.E. Martin and D.M. Finch, editors. Ecology and Management of Neotropical Migratory Birds: a synthesis and review of critical issues. Oxford University Press, New York.

Sacramento River Partners. 2003. 2001 & 2002 End of Season Report for the Ord Bend Unit, Sacramento River National Wildlife Refuge, Glenn County, California. Helen Swagerty. Chico, California.

Stillwater Sciences. 2008a. Draft biological assessment for the Feather River Levee Setback and Habitat Enhancement Project at Star Bend, Sutter County, California. Prepared by Stillwater Sciences, Arcata, California, for Levee District One of Sutter County, Yuba City, California and Wood Rodgers.

Stillwater Sciences. 2008b. Survey of potential valley elderberry longhorn beetle habitat for the Feather River Levee Setback and Habitat Enhancement Project at Star Bend, Sutter County, California. Prepared for Levee District One of Sutter County, Yuba City, California.

Stillwater Sciences. 2008c. Delineation of jurisdictional waters and wetlands for the Feather River Levee Setback and Habitat Enhancement Project at Star Bend, Sutter County, California. Prepared for Levee District One of Sutter County, Yuba City, California.

Stillwater Sciences and Wood Rodgers. 2008. Feather River Setback Levee and Habitat Enhancement Project at Star Bend, Sutter County, California: Environmental Assessment. Draft Report. Prepared for Levee District One of Sutter County, Yuba City, California.

U.S. Army Corps of Engineers (1912) Feather River Survey, Sheet 16.

USFWS. 1999. Conservation guidelines for the Valley Elderberry Longhorn Beetle. http://sacramento.fws.gov/es/documents/velb_conservation.htm Accessed on July 7, 2004.

Whitmore, D. (2004) Personal conversation with Paul Kirk of River Partners. Region II Biologist with Department of Fish and Game.

Wood Rodgers, Inc. 2007. Hydraulic and hydrologic analysis of lower Feather River setback levee at Star Bend. Prepared for Levee District 1 of Sutter County, Yuba City, California.

USFWS. 2009. Review of the Feather River Levee Setback and Habitat Enhancement Project at Star Bend, Sutter County, California for inclusion with the Programmatic Formal Consultation Permitting Projects with Relatively Small Effects on the Valley Elderberry Longhorn Beetle within the Jurisdiction of the Sacramento Field Office (Corps File No. 199600065, Service File No. 1-1-96-F-66) (Biological Opinion). Prepared for Frank Piccola, Chief, Planning Division, U.S. Army Corps of Engineers, Sacramento, California.

Appendix I
Excerpts from the Sutter County Soil Survey

LOCATION CONEJO CA
Established Series
Rev. SBJ/DJL/DJE/SBS/DWB
03/2006
CONEJO SERIES

The Conejo series consists of very deep, well drained soils that formed in alluvium from basic igneous or sedimentary rocks. Conejo soils are on alluvial fans and stream terraces. Slopes range from 0 to 9 percent. The mean annual precipitation is about 20 inches, (508 mm) and the mean annual air temperature is about 62 degrees F, (17 degrees C).

TAXONOMIC CLASS: Fine-loamy, mixed, superactive, thermic Pachic Haploxerolls

TYPICAL PEDON: Conejo clay loam under a cover of milo at an elevation of 135 feet, (41 m). Re-described on 7/20/1993. (Colors are for dry soil unless otherwise noted).

Ap--0 to 5 inches, (0 to 13 cm); dark gray (10YR 4/1) clay loam, very dark gray (10YR 3/1) moist; 31 percent clay, moderate medium and coarse subangular blocky and strong medium granular structure; very hard, friable, moderately sticky and moderately plastic; many fine and medium irregular pores; slightly alkaline, pH 7.5 by Hellige-Truog; abrupt wavy boundary. (3 to 8 inches, (8 to 20 cm) thick)

A1--5 to 19 inches, (13 to 48 cm); very dark grayish brown (10YR 3/2) clay loam, very dark brown (10YR 2/2) moist; 31 percent clay, moderate coarse subangular blocky structure; very hard, friable, moderately sticky and moderately plastic; common very fine roots; many very fine and fine tubular and many fine irregular pores; slightly alkaline, pH 7.5 by Hellige-Truog; clear wavy boundary. (10 to 17 inches, (25 to 43 cm) thick)

A2--19 to 30 inches, (48 to 76 cm); very dark grayish brown (10YR 3/2) clay loam, very dark grayish brown (10YR 3/2) moist; 31 percent clay, moderate medium subangular blocky structure; very hard, friable, moderately sticky and moderately plastic; common very fine roots; many very fine and few fine tubular pores; few pressure faces; common fine iron-manganese nodules about l mm diameter; 1 percent gravel; slightly alkaline, pH 7.5 by Hellige-Truog; gradual wavy boundary. (10 to 15 inches, (25 to 38 cm) thick)

Bw1--30 to 48 inches, (76 to 122 cm); dark grayish brown (10YR 4/2) clay loam, very dark grayish brown (10YR 3/2) moist; 29 percent clay; moderate coarse subangular blocky structure; very hard, friable, moderately sticky and moderately plastic; common very fine roots; many very fine and fine tubular and many fine irregular pores; many pressure faces; few fine iron-manganese nodules about 1 mm diameter; 2 percent gravel; slightly alkaline, pH 7.5 by Hellige-Truog; clear wavy boundary. (13 to 20 inches, (33 to 51 cm) thick)

Bw2--48 to 70 inches, (122 to 178 cm); brown (10YR 5/3) loam, dark yellowish brown (10YR 4/4) moist; 19 percent clay, weak fine and medium subangular blocky structure; slightly hard, weakly brittle but friable, nonsticky and slightly plastic; common very fine roots; many very fine and few fine and medium tubular pores; slightly effervescent in seams; common medium oxidized iron masses; 1 percent gravel; moderately alkaline, pH 8.0 by Hellige-Truog.

TYPE LOCATION: Butte County, California; about 6 miles south of Chico on west side of Aquas Frias Road; 800 feet south of northeast corner of Section 33, Township 21 N., Range 1 E., 39 degrees, 38 minutes, 10 seconds North latitude; 121 degrees, 51 minutes, 40 seconds West longitude, NAD27 - U.S.G.S. Quad: Chico, California.

RANGE IN CHARACTERISTICS: Depth is greater than 80 inches, (203 cm). The mean annual soil temperature is 59 to 66 degrees F, (15 to 19 degrees C). The soil moisture control section is dry in all parts from about May through October (about 140 to 160 days). The particle-size control section has about 20 to 35 percent clay and some gravel is present.

Some pedons have fine sandy loam or loam overwash less than 20 inches (51cm) thick. These pedons have clay loam or loam Ab and upper Bw horizons, have 0 to 5 percent gravel and average 18 to 35 percent clay in the particle-size control section. The extent of this overwash phase is 600 to 700 acres and is the result of hydraulic mine deposits splaying out of the early levees on Butte Creek, north of Durham.

The Ap and A horizons have dry colors of 10YR 3/2, 4/1, 4/2, 4/3, 4/4, 5/2 or 5/3. Moist color is 10YR 3/1, 3/2, 2/2, 3/3, 4/2 or 7.5YR 3/2. In some pedons, it has weak to strong granular structure; in others, all or part has moderate to strong subangular blocky structure. Texture is clay loam. Clay content ranges from 27 to 35 percent. Organic matter ranges from 1.5 to 6 percent. Rock fragments range from 0 to 2 percent gravel. Reaction ranges from slightly acid to slightly alkaline.

The upper Bw horizon has dry colors of 10YR 4/2, 4/3, 4/4, 5/2, 5/3, 5/4, 6/2, 6/3, 6/4, 7/3, 7.5YR 4/2, 4/4, 5/4 or 6/4. Moist color is 10YR 2/2, 3/2, 3/3, 3/4, 4/2, 4/3, 4/4, 5/2, 7.5YR 3/2, 3/4, 4/2 or 4/4. Texture is loam or clay loam. Clay content ranges from 27 to 35 percent. Rock fragments range from 0 to 2 percent gravel. Reaction ranges from slightly acid to slightly alkaline.

The lower Bw horizon has dry colors of 10YR 3/4, 4/2, 4/3, 4/4, 5/3, 5/4, 6/2, 6/3, 6/4, 7.5YR 4/2, 4/4, 5/2 or 5/4. Moist color is 10YR 4/2, 4/3, 4/4, 5/3 or 5/4. Texture is sandy loam, fine sandy loam, loam or clay loam. Clay content ranges from 15 to 35 percent. Rock fragments range from 0 to 2 percent gravel. Reaction ranges from neutral to moderately alkaline, but some pedons are slightly acid. Segregated or secondary lime is in some pedons at depths greater than 48 inches, (76 cm). Some pedons have redoximorphic features within 40 inches, (102 cm) of the surface, a few pedons have redoximorphic features within 30 inches, (76 cm) of the surface. Some pedons have siltstone at depths of 40 to 60 inches, (102 to 152 cm).

COMPETING SERIES: These are the Agueda, Almendra, Anaheim, Carranza, Gazos, Reward, Salinas and Westfan series. Agueda soils are calcareous throughout. Almendra soils

have 18 to 27 percent clay in the particle-size control section. Anaheim soils are moderately deep to a paralithic contact. Gazos soils have a lithic contact within 40 inches, (102 cm) of the surface. Carranza soils have extremely gravelly sandy clay loam C horizons within a depth of 40 inches, (102 cm). Reward soils are effervescent and have a lithic contact at 40 to 60 inches, (102 to 152 cm). Salinas soils have secondary carbonate accumulations in the C horizons. Westfan soils have Btk and Ck horizons that are strongly effervescent and have disseminated carbonates or concretions, have solum thickness of 25 to 60 inches, (64 to 152 cm), and have a water table between 36 to 60 inches, (91 to 152 cm) from November through April.

GEOGRAPHIC SETTING: Conejo soils are on alluvial fans and stream terraces at elevations of 30 to 2,000 feet, (9 to 610 m). Slopes range from 0 to 9 percent. The soil formed in alluvium from basic igneous and sedimentary rocks. The climate has hot dry summers and cool moist winters. Mean annual precipitation is 14 to 26 inches, (356 to 660 mm). Mean annual temperature is about 59 to 64 degrees F, (15 to 18 degrees C), average January temperature varies from 45 to 50 degrees F, (7 to 10 degrees C), and average July temperature varies from 70 to 80 degrees F, (21 to 26 degrees C). Frost free period is about 260 to 330 days.

GEOGRAPHICALLY ASSOCIATED SOILS: These are the Cibo, Clear Lake and Trimmer soils. Cibo and Trimmer soils occur on upland areas and have lithic and paralithic contacts respectively. Clear Lake soils are of clay texture and occupy basins.

DRAINAGE AND PERMEABILITY: Well drained; slow to medium runoff, moderately slow saturated hydraulic conductivity in the A and upper Bw horizons and moderately slow to moderately rapid in the lower Bw horizon. Some areas are subject to occasional flooding.

USE AND VEGETATION: Used for irrigated row crops, orchard, hay and pasture and grain. Vegetation is annual grasses and forbs with few scattered oaks.

DISTRIBUTION AND EXTENT: Valley areas in northern and central California and the Coast Range of California. The soils are of small extent

MLRA OFFICE RESPONSIBLE: Davis, California

SERIES ESTABLISHED: Siskiyou County (Shasta Valley Area, California 1919).

REMARKS: The Conejo series was established in Siskiyou County in 1919. The type location was moved to Butte County some time prior to 1989. It is mapped in multiple MLRA's in Butte, Contra Costa, Los Angeles, San Benito, Santa Cruz, Solano, Sutter and Yuba Counties.

The official description from Butte County was written prior to modern soil survey mapping and does not adequately represent conditions in Butte County. The type location was revisited on 7/93 and the description revised. The range of characteristics has been left as is. The use of Conejo in other areas should be reviewed during MLRA updates. In Butte County, to reflect actual conditions, the range of characteristics in the taxonomic unit description is narrowed down. (Average clay in the particle-size control section is 27 to 35 percent).

Additional Data: Clay determined by particle-size analysis at local survey office.

National Cooperative Soil Survey
U.S.A.

LOCATION HOLILLIPAH CA
Established Series
Rev:DJL/WBS/TDC/DJE
8/98
HOLILLIPAH SERIES

The Holillipah series consists of stratified very deep, somewhat excessively drained soils that formed in alluvium from mixed sources. Holillipah soils are on flood plains and alluvial fans and have slopes of O to 2 percent. The mean annual precipitation is 18 inches and the mean annual temperature is 62 degrees F.

TAXONOMIC CLASS: Sandy, mixed, thermic Typic Xerofluvents

TYPICAL PEDON: Holillipah loamy sand - on a level flood plain of about 2 percent slope under annual grasses at 50 feet elevation. (Colors are for dry soil unless otherwise stated. When described on June 1, 1978, the soil was dry to 35 inches and slightly moist below.)

A--O to 8 inches; pale brown (lOYR 6/3) loamy sand, brown (lOYR 4/3) moist; weak coarse granular structure; soft, loose, nonsticky and nonplastic; many very fine and fine and common medium roots; many very fine and fine interstitial pores; slightly acid (pH 6.5); clear smooth boundary. (5 to 10 inches thick)

C1--8 to 32 inches; white (lOYR 8/1) sand, light gray (lOYR 7/1) moist; massive; loose, nonsticky and nonplastic; many very fine and fine and common medium roots; many very fine and fine interstitial pores; neutral (pH 7.0); abrupt wavy boundary. (20 to 40 inches thick)

C2--32 to 35 inches; light yellowish brown (lOYR 6/4) loamy sand, dark yellowish brown (lOYR 4/4) moist; common medium distinct strong brown (7.5YR 4/6) mottles; massive; soft, very friable, nonsticky and nonplastic; common very fine tubular pores; neutral (pH 7.0); abrupt wavy boundary. (3 to 20 inches thick)

C3--35 to 47 inches; brown (lOYR 5/3) fine sandy loam, dark brown (lOYR 3/3) moist; many medium distinct brown (7.5YR 5/4) mottles; massive; slightly hard, friable, nonsticky and nonplastic; common very fine tubular pores; neutral (pH 7.0); gradual irregular boundary. (O to 15 inches thick)

C4--47 to 61 inches; pale brown (lOYR 6/3) loamy fine sand, dark brown (lOYR 3/3) moist; massive; soft, very friable, nonsticky and nonplastic; few very fine tubular pores; neutral (pH 7.0).

TYPE LOCATION: Sutter County, California; approximately 5.6 miles south of Yuba City on Garden Highway then east 0.56 miles to about 400 feet from Feather River; 2,100 feet north and 3,000 feet east of the intersection of O'Banion Road and Garden Highway in the New Helvetia land grant, T. 14 N., R. 3 E. Olivehurst Quadrangle.

RANGE IN CHARACTERISTICS: The mean annual soil temperature is 60 degrees to 65 degrees F. The soil temperature is above 47 degrees F the entire year. The soil between depths of 14 and 43 inches is dry in all parts from May through October, and is moist in some or all parts from November through April unless irrigated. The difference between average July and average January soil temperature is 30 degrees to 33 degrees F. The soil is stratified with thick Layers of sand, loamy fine sand or loamy sand and thin layers of fine sandy loam, sandy loam and silt loam. The particle-size control section averages loamy sand or coarser. Strata of sandy loam, fine sandy loam or silt loam 1/2 1 cm thick occur above 40 inches in depth. Organic carbon content decreases irregularly with depth. It is slightly acid to neutral.

The A horizon has dry color of lOYR 6/4, 6/3, or 6/2 and moist color of lOYR 4/4, 4/3, 4/2, or 3/3. It is sandy loam or loamy sand.

The C horizon has dry color of lOYR 8/1, 7/1, 7/2, 7/3, 7/4, 6/3, 6/4 or 5/3 and moist color of lOYR 7/1, 7/2, 6/2, 5/2, 5/3, 5/4, 4/2, 4/3, 4/4 or 3/3. Mottles may be relic from initial deposition and are associated with the finer textured stratified layers and not indicative of an intermittent high water table. Gravel content ranges from O to 5 percent.

COMPETING SERIES: These are the Metz series. Metz soils are neutral to moderately alkaline, are calcareous below the A horizon, and have a difference between mean summer and mean winter soil temperature of about 20 degrees F.

GEOGRAPHIC SETTING: Holillipah soils are on alluvial fans and flood plains. Slopes are O to 2 percent. The soils formed in stratified alluvium from mixed sources. Elevations are 20 to 150 feet. The climate is subhumid with hot dry summers and cool moist winters. Mean annual precipitation is 17 to 22 inches. January temperature is 45 degrees F., mean July temperature is 77 degrees F., and mean annual temperature varies from 60 degrees to 64 degrees F. Frost- free season is 260 to 280 days.

GEOGRAPHICALLY ASSOCIATED SOILS: Theses are the Columbia and Shanghai soils. Columbia and Shanghai soils are on similar flood plain positions, but usually are slightly lower in the landscape.

DRAINAGE AND PERMEABILITY: Somewhat excessively drained; very slow runoff; moderately rapid permeability. The soils are flooded unless protected by levees.

USE AND VEGETATION: This soil is used for irrigated orchards and row crops. In some areas next to rivers, the natural vegetation is valley oak, cottonwood and shrubs.

DISTRIBUTION AND EXTENT: Southeastern part of the Sacramento Valley. Soils are not extensive.

MLRA OFFICE RESPONSIBLE: Davis, California

SERIES ESTABLISHED: Sutter County, California 1984. Series name is from a tribe of native Americans in the area who have now vanished.

OSED scanned by SSQA. Last revised by state on 2/87.

National Cooperative Soil Survey
U.S.A.

LOCATION SHANGHAI CA
Established Series
Rev. ENV/DJL/TDC/CEJ/ET
03/2003

SHANGHAI SERIES

The Shanghai series consists of very deep, somewhat poorly drained soils that formed in alluvium from mixed sources. Shanghai soils are on flood plains and have slopes of 0 to 2 percent. The annual temperature is about 62 degrees F. and the annual precipitation is about 18 inches.

TAXONOMIC CLASS: Fine-silty, mixed, superactive, nonacid, thermic Aquic Xerofluvents

TYPICAL PEDON: Shanghai silt loam - on a nearly level slope of less than l percent in an irrigated prune orchard at 30 feet elevation. (Colors are for dry soil unless otherwise stated. When described on April 9, 1979, the soil was moist throughout.)

Ap--0 to 11 inches; very pale brown (10YR 7/4) silt loam, brown (10YR 4/3) moist; common medium distinct yellowish brown (10YR 5/6) mottles, yellowish brown (10YR 5/8) moist; moderate very fine subangular blocky structure; slightly hard, friable, slightly sticky and plastic; common very fine roots; common very fine tubular pores; neutral (pH 7.0); clear smooth boundary. (7 to 14 inches thick)

A--11 to 21 inches; very pale brown (10YR 7/3) silt loam, brown (10YR 4/3) moist; common large distinct strong brown (7.5YR 5/6) mottles, dark yellowish brown (10YR 4/6) moist; massive; slightly hard, friable, slightly sticky and plastic; common very fine roots; common very fine tubular pores; neutral (pH 7.0); gradual wavy boundary. (3 to 10 inches thick)

C1--21 to 27 inches; pale brown (10YR 6/3) silt loam, yellowish brown (10YR 5/4) moist; many medium prominent yellowish brown (10YR 5/8) and many large prominent strong brown (7.5YR 4/6) mottles, dark yellowish brown (10YR 3/6) and dark reddish brown (2.5YR 3/4) moist; massive; slightly hard, friable, slightly sticky and slightly plastic; common very fine and few fine roots; common very fine tubular pores; neutral (pH 7.0); gradual wavy boundary. (6 to 18 inches thick)

C2--27 to 36 inches; pale brown (10YR 6/3) silt loam, dark yellowish brown (10YR 4/4) moist; many medium prominent yellowish brown (10YR 5/8) and many large prominent strong brown (7.5YR 4/6) mottles, dark yellowish brown (10YR 3/6) and dark reddish brown (2.5YR 3/4) moist; massive; slightly hard, friable, slightly sticky and slightly plastic; common very fine roots; very fine tubular pores; neutral (pH 7.0); gradual wavy boundary. (9 to 16 inches thick)

C3--36 to 54 inches; very pale brown (10YR 7/3) silt loam, dark yellowish brown (10YR 4/4) moist; common medium distinct strong brown (7.5YR 5/8) mottles, dark brown (7.5YR 4/4) moist; massive; slightly hard, friable, slightly sticky and slightly plastic; few very fine roots; common very fine tubular pores; neutral (pH 7.0); gradual wavy boundary. (8 to 18 inches thick)

C4--54 to 62 inches; pale brown (10YR 6/3) silt loam, dark brown (10YR 3/3) moist; many medium distinct yellowish red (5YR 5/8) mottles; massive; soft, friable, slightly sticky and slightly plastic; few very fine roots; common very fine pores; neutral (pH 7.0).

TYPE LOCATION: Sutter County, California; approximately 1.2 miles north of Yuba City on Live Oak Highway, then east on Rednall Road to levee; 2,000 feet north and 900 feet east of the intersection of Rednall Road and the western levee of the Feather River, approximately 800 feet from river, in the New Helvetia land grant T.15 N., R.3 E. Yuba City Quadrangle.

RANGE IN CHARACTERISTICS: The mean annual soil temperature is 60 degrees to 65 degrees F. The soil temperature is above 47 degrees F. the entire year. The soil between depths of 6 and 18 inches is dry in all parts from June through October and is moist in some or all parts from November through May unless irrigated. The difference between average July and average January soil temperature is 30 degrees to 33 degrees F.

The 10 to 40 inches control section is stratified layers of silt loam to fine sandy loam and silty clay loam, but is dominantly silt loam with less than 15 percent coarser than very fine sand. Clay content ranges from 20 to 35 percent. Content of organic matter decreases irregularly with depth. Reaction is slightly acid to moderately alkaline.

The A horizon has dry color of 10YR 7/4, 7/3, 6/4, 6/3, 5/4; 2.5Y 6/2 or 7/2 and moist color of 10YR 4/4, 4/3; 2.5Y 4/2, 3/2 or 3/3 with mottled colors dry and moist of 10YR 4/6, 5/6, 5/8; 7.5YR 5/6, 7/6 and 5YR 6/8. It is silty clay loam, silt loam or fine sandy loam.

The C horizon has dry colors of 10YR 8/4, 7/4, 6/4, 8/3, 7/3, 6/3; 2.5Y 6/2 or 7/2 and moist color of 10YR 6/6, 6/4, 6/3, 5/6, 5/3, 3/3, 5/4, 4/4; 2.5Y 5/2, 4/2, or 5Y 6/3 with prominent or distinct mottles. Some pedons have a clay layer at 40 to 60 inches.

COMPETING SERIES: There are no other series in this family.

GEOGRAPHIC SETTING: Shanghai soils are on flood plains with slopes of 0 to 2 percent. They formed in alluvium from mixed sources. Elevations are 20 to 150 feet. The climate has hot dry summers and cool moist winters. Mean annual precipitation is 14 to 22 inches. Average January temperature is about 45 degrees F., the average July temperature is about 77 degrees F.,

and the mean annual temperature is 60 degrees to 64 degrees F. The frost-free season is about 260 to 290 days.

GEOGRAPHICALLY ASSOCIATED SOILS: These are the Columbia and Holillipah soils. Columbia soils are on similar flood plain positions. Holillipah soils are on similar but slightly higher flood plain positions in areas adjacent to rivers.

DRAINAGE AND PERMEABILITY: Somewhat poorly drained; runoff is very slow; permeability is moderate, but may be slow below 40 inches. Unless protected, these soils are subject to flooding. Unless drained, in low lying areas and areas adjacent to levees, a water table is present at a depth of 30 to 60 inches in December through April and below a depth of 48 inches in May to November. In other areas, the water table is at 36 to 60 inches in December through April.

USE AND VEGETATION: This soil is used for irrigated orchards, small grains and row crops.

DISTRIBUTION AND EXTENT: Southeastern part of Sacramento Valley. Soils are moderately extensive.

MLRA OFFICE RESPONSIBLE: Davis, California

SERIES ESTABLISHED: Sutter County, California 1984.

REMARKS: The activity class was added to the classification in February of 2003. Competing series were not checked at that time. - ET

Last revised by the state on 2/91.

National Cooperative Soil Survey
U.S.A.

LOCATION COLUMBIA CA
Established Series
Rev. DJL/CAF/MAV/SBS/DWB
05/2006
COLUMBIA SERIES

The Columbia series consists of very deep, moderately well drained soils formed in alluvium from mixed sources. These soils are on flood plains and natural levees and have slopes of 0 to 8 percent. The mean annual precipitation is 12 to 25 inches, (305 to 635 mm) and the mean annual temperature is about 61 degrees F, (16 degrees C).

TAXONOMIC CLASS: Coarse-loamy, mixed, superactive, nonacid, thermic Oxyaquic Xerofluvents

TYPICAL PEDON: Columbia fine sandy loam, on a nearly level plowed field. (Colors are for dry soil unless otherwise stated.)

Ap--0 to 11 inches, (0 to 28 cm); pale brown (10YR 6/3) fine sandy loam, brown (10YR 4/3) moist; slightly hard, very friable, nonsticky and nonplastic; common very fine roots; few very fine tubular and many very fine interstitial pores; slightly acid (pH 6.4); clear smooth boundary. (7 to 12 inches, (18 to 31 cm) thick)

A--11 to 16 inches, (28 to 41 cm); pale brown (10YR 6/3) fine sandy loam, brown (10YR 4/3) moist; weak medium subangular blocky structure; slightly hard, very friable, nonsticky and nonplastic; many very fine roots; common very fine tubular pores, slightly acid (pH 6.4); clear wavy boundary. (4 to 8 inches, (10 to 20 cm) thick)

C1--16 to 23 inches, (41 to 58 cm): pale brown (10YR 6/3) fine sandy loam, brown (10YR 4/3) moist; massive; soft, very friable, nonsticky and nonplastic; common very fine roots; many very fine interstitial pores; common fine prominent yellowish brown (10YR 5/6) masses of iron accumulations, strong brown (7.5YR 5/6) moist; slightly acid (pH 6.5); clear wavy boundary. (4 to 8 inches, (10 to 20 cm) thick)

C2--23 to 26 inches, (58 to 66 cm); pale brown (10YR 6/3) sand, dark brown (10YR 3/3) moist; single grained; loose, nonsticky and nonplastic; many very fine roots; many very fine interstitial pores; slightly acid (pH 6.5); clear smooth boundary. (0 to 5 inches, (0 to 13 cm) thick)

C3--26 to 31 inches, (66 to 79 cm); very pale brown (10YR 7/3) and reddish yellow (7.5YR 6/6) fine sandy loam; massive; slightly hard, very friable, nonsticky and nonplastic; common very fine roots; many very fine tubular pores; common fine prominent yellowish brown (10YR 5/4) and strong brown (7.5YR 5/6) masses of iron accumulations moist; neutral (pH 7.0); clear smooth boundary. (2 to 8 inches, (5 to 20 cm) thick)

C4--31 to 34 inches, (79 to 86 cm); very pale brown (10YR 7/3) silt loam, brown (10YR 5/3) moist; moderate medium prismatic structure; hard, friable, slightly sticky and slightly plastic; very few very fine roots; many very fine and fine tubular pores; many medium distinct reddish yellow (7.5YR 6/6), strong brown (7.5YR 5/6) masses of iron accumulations moist; slightly alkaline (pH 7.5); clear smooth boundary. (0 to 5 inches, (0 to 13 cm) thick)

C5--34 to 38 inches, (86 to 97 cm); very pale brown (10YR 7/3) fine sandy loam, brown (10YR 5/3) moist; massive; slightly hard, very friable, nonsticky and nonplastic; very few very fine roots; many fine tubular and common very fine interstitial pores; many medium distinct reddish yellow (7.5YR 6/6), strong brown (7.5YR 5/6) masses of iron accumulation; slightly alkaline (pH 7.7); clear smooth boundary. (2 to 10 inches, (5 to 25 cm) thick)

C6--38 to 41 inches, (97 to 104 cm); pale brown (10YR 6/3) sand, dark brown (10YR 3/3) moist; single grained; loose, nonsticky and nonplastic; common very fine roots; common very fine tubular and many very fine interstitial pores; neutral (pH 7.0); abrupt smooth boundary. (1 to 5 inches, (2.5 to 13 cm) thick)

C7--41 to 55 inches, (104 to 140 cm); pale brown (10YR 6/3) loam, brown (10YR 5/3) moist; massive; slightly hard, very friable, slightly sticky and nonplastic; few very fine roots; many very fine, medium and coarse tubular pores; many medium distinct reddish yellow (7.5YR 6/6) and strong brown (7.5YR 5/6) masses of iron accumulation moist; moderately alkaline (pH 8.0); clear smooth boundary. (0 to 15 inches, (0 to 38 cm) thick)

Ab--55 to 59 inches, (140 to 150 cm); gray (10YR 6/1) silty clay loam, dark gray (10YR 4/1) moist; massive; hard, friable, sticky and slightly plastic; very few very fine roots; many very fine, fine and medium tubular pores; common fine distinct strong brown (7.5YR 5/6), dark brown (7.5YR 3/2) masses of iron accumulation moist; moderately alkaline (pH 8.0).

TYPE LOCATION: Solano County, California; 400 feet south of the south end of the bridge at the north end of Ryer Island. Not sectionalized, T.5 N., R.3 E.

RANGE IN CHARACTERISTICS: The mean annual soil temperature is 60 to 65 degrees F, (16 to 18 degrees C). The soil between depths of 8 and 25 inches, (20 to 64 cm) is moist in some or all parts from late October to late May or June and is dry in all parts the remainder of the year, unless irrigated. The 10 to 40 inches, (25 to 102 cm) particle-size control section is stratified fine sandy loam, very fine sandy loam, silt loam, loam, loamy sand, loamy fine sand, fine sand or sand and averages 10 to 18 percent clay, when mixed, and has greater than 15 percent fine sand or coarser. Up to 35 percent gravel may occur below a depth of 40 inches, (102 cm). Redoximorphic features occur between 10 and 48 inches, (25 to 122 cm). Content of organic matter decreases irregularly with depth.

The A horizon is 10YR 7/2, 6/4, 6/3, 6/2, 5/4, 5/3 or 5/2 and moist color of 10YR 5/4, 4/4, 4/3 or 4/2. Texture is sandy loam, sand, loamy sand, loamy fine sand, fine sandy loam, loam or silt loam and commonly is stratified. Reaction is slightly acid to slightly alkaline.

The C horizon is 10YR 8/4, 8/1, 7/4, 7/3, 7/2, 7/1, 6/4, 6/3, 6/2 6/1, 5/4 or 5/3 and moist color of 10YR 7/4, 7/3, 7/2, 6/2, 6/4, 5/4, 5/3, 5/2, 4/4, 4/3, 4/2, 4/1, 3/3, or 3/4. Redoximorphic features have hues of 10YR, 7.5YR, 5YR or 2.5YR with chroma of 3, 4 or 6. Texture is stratified sand to silty clay loam. Finer textures occur below 40 inches, (102 cm). Reaction is slightly acid to slightly alkaline but may be moderately alkaline in horizons underlain by an Ab horizon.

The Ab horizon is 10YR 6/1, 5/1, 4/1, 4/2, 3/1 or 2/1; 2.5Y 6/2. Moist colors are 10YR 5/1, 4/1, 3/1, 2/1; N 2/0; 2.5Y 3/2. Texture is mucky clay loam, clay loam, silty clay loam, silty clay or clay. Depth to a buried horizon ranges from 40 to 60 inches, (102 to 152 cm). Some pedons lack a buried horizon and some pedons are calcareous at 40 inches, (102 cm) or more. Reaction is neutral to moderately alkaline.

COMPETING SERIES: There are no other series in this family.

GEOGRAPHIC SETTING: Columbia soils are on flood plains with bar and channel topography in some natural areas or are on natural levees. These soils formed in alluvium from mixed sources. Elevations are 10 feet below sea level to 155 feet above sea level (47 m). The climate is subhumid with hot dry summers and cool moist winters. Mean annual precipitation is

12 to 25 inches, (304 to 635 mm). Mean January temperature is 45 degrees F, (7 degrees C), mean July temperature is 80 degrees F, (27 degrees C). Mean annual temperature varies from 58 to 63 degrees F, (14 to 17 degrees C). Frost-free period is 230 to 340 days.

GEOGRAPHICALLY ASSOCIATED SOILS: These are the Arvin, Clear Lake, Sacramento, Shanghai and Sycamore soils. Arvin soils are not saturated with water within 60 inches, (152 cm) of the surface and are in similar or slightly higher flood plain positions. Clear Lake and Sacramento soils have clay textures and are in basins. Sycamore soils have less than 15 percent fine or coarser sand and are in similar flood plain positions.

DRAINAGE AND PERMEABILITY: Moderately well drained; negligible to medium runoff; moderately rapid permeability. Clay substratum phase has slow permeability below a depth of 40 inches, (102 cm). Sandy substratum phase has rapid permeability below a depth of 40 inches, (102 cm). Except where drained, these soils are saturated at 20 to 48 inches, (51 to 122 cm) for several months in the period from November to April. In areas not protected by levees or other flood control structures these soils are subject to occasional to frequent, brief to long periods of flooding in November to May. Rare flooding occurs in partly protected areas.

USE AND VEGETATION: These soils are used for irrigated hay, small grain, and orchard and row crops. Vegetation consists of a fairly dense cover of oaks, cottonwoods, willows, vines, shrubs and grasses near stream channels, but more open away from the channels.

DISTRIBUTION AND EXTENT: These soils occur in the central valley of California. The soils are moderately extensive in MLRA-16, 17.

MLRA OFFICE RESPONSIBLE: Davis, California

SERIES ESTABLISHED: Reconnaissance Survey of Southwest Washington 1911.

REMARKS: The series was redefined in the Chico area of Butte County, California in 1925. The type location was moved to Madera County, Californian 1959. The type location was then moved to Solano County, California 1970.

Diagnostic horizons and features recognized in this pedon are:

Ochric epipedon - the zone from the surface to a depth of 16 inches, (41 cm) (Ap, A)

Oxyaquic subgroup - the zone from 20 to 48 inches, (51 to 122 cm) is saturated for several months.

CEC/Clay ratio estimated from similar soils with laboratory data in the W. Stanislaus Soil Survey Area and University Laboratory data.

Edit log: Runoff terminology adjusted 4/96 to adjective criteria of the Soil Survey Manual (10/93). 5/2003 Proposed edits for use in Butte County; Range in Characteristics: expand allowed gravel from 5 to 35 percent below a depth of 40 inches. A horizon: add textures sand,

loamy sand, loamy fine sand, and add: commonly is stratified. C horizon: add colors moist 10YR 6/2 and 3/4. Geographic setting: expand elevation from 150 to 155 feet. In remarks added history of type location moves.

ADDITIONAL DATA: NO: 50-CAL-20-39-1-1 to 3 University of California, Madera County, Tehama County, and UC Berkley, 58-52-48.

National Cooperative Soil Survey
U.S.A.

Appendix II
Vegetation Association Tiles

<u>Mixed Riparian Forest</u>
Total area: 15.5

Common name	Code	Scientific name	Species comp. (%)	Density (plant/acre)	Estimated Number
Arroyo willow	AW	*Salix lasiolepis Benth.*	6.0	6.6	102
Box elder	BE	*Acer negundo L.*	4.0	4.4	68
Buttonbush	BU	*Cephalanthus occidentalis*	4.0	4.4	68
California blackberry	BB	*Rubus ursinus Chain. & Schldl.*	24.0	26.4	409
Coyote bush	CB	*Baccharis pilularis DC.*	2.0	2.2	34
Elderberry	EB	*Sambucus mexicana*	4.0	4.4	68
Fremont cottonwood	CO	*Populus fremontii S.Watson ssp. fremontii*	4.0	4.4	68
Gooding's black willow	BW	*Salix goodingii C.R. Ball*	2.0	2.2	34
Mule fat	MF	*Baccharis salicifolia*	4.0	4.4	68
Oregon ash	AS	*Fraxinus latifolia Benth*	6.0	6.6	102
Sandbar (narrow-leaf) willow	SW	*Salix exigua Nutt.*	2.0	2.2	34
Valley oak	OK	*Quercus lobata Nee*	10.0	11.0	171
Western sycamore	SY	*Platanus racemosa Nutt.*	10.0	11.0	171
Wild rose	RO	*Rosa californica Cham. & Schldl.*	18.0	19.8	307
		TOTAL	**100.0**	**110.0**	**1,705**

MRF

Plant#\row	1	2	3	4	5
1	OK	CO	RO	AS	BW
2	CO	SY	BB	BB	AS
3	SW	RO	BU	MF	BB
4	BB	BB	RO	RO	BB
5	SY	EB	RO	AW	OK
6	EB	RO	OK	BE	RO
7	BB	BB	RO	BE	RO
8	CB	BB	BU	AW	OK
9	AW	SY	BB	MF	BB
10	SY	OK	BB	AS	SY

Riparian Scrub Shrub (Elderberry)
Total area: 20.0

Common name	Code	Scientific name	Species comp. (%)	Density (plant/acre)	Estimated Number
Arroyo willow	AW	*Salix lasiolepis* Benth.	5.4	10.9	217
Buttonbush	BU	*Cephalanthus occidentalis*	5.5	11.1	222
California blackberry	BB	*Rubus ursinus* Chain. & Schldl.	7.8	15.8	316
Coyote brush	CB	*Baccharis pilularis* DC.	13.0	26.2	524
Elderberry	EB	*Sambucus mexicana*	36.5	73.8	1,475
Mule fat	MF	*Baccharis salicifolia*	8.9	17.9	358
Sandbar (narrow-leaf) willow	SW	*Salix exigua* Nutt.	3.4	6.9	137
Wild rose	RO	*Rosa californica* Cham. & Schldl.	19.6	39.6	791
		TOTAL	**100.0**	**202.2**	**4,040**

RSE

Plant#\row	1	2	3	4	5
1	EB	EB	RO	EB	EB
2	EB	EB	SW	EB	EB
3	CB	CB	MF	BB	BB
4	BB	EB	EB	EB	BB
5	EB	EB	BU	EB	EB
6	EB	AW	EB	BB	AW
7	RO	RO	EB	EB	MF
8	RO	CB	EB	RO	RO
9	EB	EB	BB	EB	EB
10	EB	EB	RO	EB	EB

RSE Buffer

Plant#\row	1	2	3	4	5
1	BU	CB	RO	CB	AW
2	BU	CB	SW	CB	MF
3	CB	CB	MF	RO	RO
4	CB	RO	MF	CB	RO
5	MF	MF	BU	MF	MF
6	CB	AW	RO	RO	AW
7	RO	RO	RO	AW	MF
8	RO	CB	CB	RO	RO
9	BU	SW	MF	BU	CB
10	RO	SW	RO	BU	CB

Riparian Scrub Shrub (Blackberry)
Total area: 15.9

Common name	Code	Scientific name	Species comp. (%)	Density (plant/acre)	Estimated Number
Arroyo willow	AW	*Salix lasiolepis* Benth.	14.0	33.9	539
Buttonbush	BU	*Cephalanthus occidentalis*	12.0	29.0	462
California blackberry	BB	*Rubus ursinus* Chain. & Schldl.	24.0	58.1	923
Coyote bush	CB	*Baccharis pilularis* DC.	4.0	9.7	154
Elderberry	EB	*Sambucus mexicana*	14.0	33.9	539
Mule fat	MF	*Baccharis salicifolia*	4.0	9.7	154
Sandbar (narrow-leaf) willow	SW	*Salix exigua* Nutt.	4.0	9.7	154
Wild rose	RO	*Rosa californica* Cham. & Schldl.	24.0	58.1	923
		TOTAL	**100.0**	**242.0**	**3,847**

RSB

Plant#\row	1	2	3	4	5
1	BB	BB	RO	RO	RO
2	BB	BB	RO	RO	RO
3	BB	BB	CB	RO	RO
4	RO	BU	CB	EB	EB
5	RO	BU	AW	AW	BU
6	BU	AW	AW	AW	BU
7	BB	MF	SW	BB	BB
8	BB	BU	MF	BB	BB
9	AW	RO	EB	EB	AW
10	EB	RO	EB	SW	EB

Riparian Scrub Shrub (Blackberry) Closed
Total area: 2.0

Common name	Code	Scientific name	Species comp. (%)	Density (plant/acre)	Estimated Number
California blackberry	BB	*Rubus ursinus* Chain. & Schldl.	50.0	871.2	1,742
Wild rose	RO	*Rosa californica* Cham. & Schldl.	50.0	871.2	1,742
		TOTAL	**100.0**	**1,742.4**	**3,484**

RSB Closed

Plant#\row	1	2	3	4	5
1	BB	RO	BB	RO	BB
2	RO	BB	RO	BB	RO
3	BB	RO	BB	RO	BB
4	RO	BB	RO	BB	RO
5	BB	RO	BB	RO	BB
6	RO	BB	RO	BB	RO
7	BB	RO	BB	RO	BB
8	RO	BB	RO	BB	RO
9	BB	RO	BB	RO	BB
10	RO	BB	RO	BB	RO

Appendix III
1999 U.S. Fish and Wildlife Service Elderberry Conservation Guidelines

United States Department of the Interior

Fish and Wildlife Service

Sacramento Fish and Wildlife Office
2800 Cottage Way, Room W-2605
Sacramento, California 95825

Conservation Guidelines for the Valley Elderberry Longhorn Beetle

Revised July 9, 1999

The following guidelines have been issued by the U.S. Fish and Wildlife Service (Service) to assist Federal agencies and non-federal project applicants needing incidental take authorization through a section 7 consultation or a section 10(a)(1)(B) permit in developing measures to avoid and minimize adverse effects on the valley elderberry longhorn beetle. The Service will revise these guidelines as needed in the future. The most recently issued version of these guidelines should be used in developing all projects and habitat restoration plans. The survey and monitoring procedures described below are designed to avoid any adverse effects to the valley elderberry longhorn beetle. Thus a recovery permit is not needed to survey for the beetle or its habitat or to monitor conservation areas. If you are interested in a recovery permit for research purposes please call the Service's Regional Office at (503) 231-2063.

Background Information

The valley elderberry longhorn beetle (*Desmocerus californicus dimorphus*), was listed as a threatened species on August 8, 1980 (Federal Register 45: 52803-52807). This animal is fully protected under the Endangered Species Act of 1973, as amended (16 U.S.C. 1531 et seq.). The valley elderberry longhorn beetle (beetle) is completely dependent on its host plant, elderberry (Sambucus species), which is a common component of the remaining riparian forests and adjacent upland habitats of California's Central Valley. Use of the elderberry by the beetle, a wood borer, is rarely apparent. Frequently, the only exterior evidence of the elderberry's use by the beetle is an exit hole created by the larva just prior to the pupal stage. The life cycle takes one or two years to complete. The animal spends most of its life in the larval stage, living within the stems of an elderberry plant. Adult emergence is from late March through June, about the same time the elderberry produces flowers. The adult stage is short-lived. Further information on the life history, ecology, behavior, and distribution of the beetle can be found in a report by Barr (1991) and the recovery plan for the beetle (USFWS 1984).

Surveys

Proposed project sites within the range of the valley elderberry longhorn beetle should be surveyed for the presence of the beetle and its elderberry host plant by a qualified biologist. The beetle's range extends throughout California's Central Valley and associated foothills from about the 3,000-foot elevation contour on the east and the watershed of the Central Valley on the west (Figure 1). All or portions of 31 counties are included: Alameda, Amador, Butte, Calaveras, Colusa, Contra Costa, El Dorado, Fresno, Glenn, Kern, Kings, Lake, Madera, Mariposa, Merced, Napa, Nevada, Placer, Sacramento, San Benito, San Joaquin, San Luis Obispo, Shasta, Solano, Stanislaus, Sutter, Tehama, Tulare, Tuolumne, Yolo, Yuba.

If elderberry plants with one or more stems measuring 1.0 inch or greater in diameter at ground level occur on or adjacent to the proposed project site, or are otherwise located where they may be directly or indirectly affected by the proposed action, minimization measures which include planting replacement habitat (conservation planting) are required (Table 1).

All elderberry shrubs with one or more stems measuring 1.0 inch or greater in diameter at ground level that occur on or adjacent to a proposed project site must be thoroughly searched

for beetle exit holes (external evidence of beetle presence). In addition, all elderberry stems one inch or greater in diameter at ground level must be tallied by diameter size class (Table 1). As outlined in Table 1, the numbers of elderberry seedlings/cuttings and associated riparian native trees/shrubs to be planted as replacement habitat are determined by stem size class of affected elderberry shrubs, presence or absence of exit holes, and whether a proposed project lies in a riparian or non-riparian area.

Elderberry plants with no stems measuring 1.0 inch or greater in diameter at ground level are unlikely to be habitat for the beetle because of their small size and/or immaturity. Therefore, no minimization measures are required for removal of elderberry plants with no stems measuring 1.0 inch or greater in diameter at ground level with no exit holes. Surveys are valid for a period of two years.

Avoid and Protect Habitat Whenever Possible

Project sites that do not contain beetle habitat are preferred. If suitable habitat for the beetle occurs on the project site, or within close proximity where beetles will be affected by the project, these areas must be designated as avoidance areas and must be protected from disturbance during the construction and operation of the project. When possible, projects should be designed such that avoidance areas are connected with adjacent habitat to prevent fragmentation and isolation of beetle populations. Any beetle habitat that cannot be avoided as described below should be considered impacted and appropriate minimization measures should be proposed as described below.

Avoidance: Establishment and Maintenance of a Buffer Zone

Complete avoidance (i.e., no adverse effects) may be assumed when a 100-foot (or wider) buffer is established and maintained around elderberry plants containing stems measuring 1.0 inch or greater in diameter at ground level. Firebreaks may not be included in the buffer zone. In buffer areas construction-related disturbance should be minimized, and any damaged area should be promptly restored following construction. The Service must be consulted before any disturbances within the buffer area are considered. In addition, the Service must be provided with a map identifying the avoidance area and written details describing avoidance measures.

Protective Measures

1. Fence and flag all areas to be avoided during construction activities. In areas where encroachment on the 100-foot buffer has been approved by the Service, provide a minimum setback of at least 20 feet from the dripline of each elderberry plant.

2. Brief contractors on the need to avoid damaging the elderberry plants and the possible penalties for not complying with these requirements.

3. Erect signs every 50 feet along the edge of the avoidance area with the following information: "This area is habitat of the valley elderberry longhorn beetle, a threatened species, and must not be disturbed. This species is protected by the Endangered Species Act of 1973, as amended. Violators are subject to prosecution, fines, and imprisonment." The signs should be clearly readable from a distance of 20 feet, and must be maintained for the duration of construction.

4. Instruct work crews about the status of the beetle and the need to protect its elderberry host plant.

Restoration and Maintenance

Restore any damage done to the buffer area (area within 100 feet of elderberry

plants) during construction. Provide erosion control and re-vegetate with appropriate native plants.

Buffer areas must continue to be protected after construction from adverse effects of the project. Measures such as fencing, signs, weeding, and trash removal are usually appropriate.

No insecticides, herbicides, fertilizers, or other chemicals that might harm the beetle or its host plant should be used in the buffer areas, or within 100 feet of any elderberry plant with one or more stems measuring 1.0 inch or greater in diameter at ground level.

The applicant must provide a written description of how the buffer areas are to be restored, protected, and maintained after construction is completed.

Mowing of grasses/ground cover may occur from July through April to reduce fire hazard. No mowing should occur within five (5) feet of elderberry plant stems. Mowing must be done in a manner that avoids damaging plants (e.g., stripping away bark through careless use of mowing/trimming equipment).

Transplant Elderberry Plants That Cannot Be Avoided

Elderberry plants must be transplanted if they can not be avoided by the proposed project. All elderberry plants with one or more stems measuring 1.0 inch or greater in diameter at ground level must be transplanted to a conservation area (see below). At the Service's discretion, a plant that is unlikely to survive transplantation because of poor condition or location, or a plant that would be extremely difficult to move because of access problems, may be exempted from transplantation. In cases where transplantation is not possible the minimization ratios in Table 1 may be increased to offset the additional habitat loss.

Trimming of elderberry plants (e.g., pruning along roadways, bike paths, or trails) with one or more stems 1.0 inch or greater in diameter at ground level, may result in take of beetles. Therefore, trimming is subject to appropriate minimization measures as outlined in Table 1.

1. Monitor. A qualified biologist (monitor) must be on-site for the duration of the transplanting of the elderberry plants to insure that no unauthorized take of the valley elderberry longhorn beetle occurs. If unauthorized take occurs, the monitor must have the authority to stop work until corrective measures have been completed. The monitor must immediately report any unauthorized take of the beetle or its habitat to the Service and to the California Department of Fish and Game.

2. Timing. Transplant elderberry plants when the plants are dormant, approximately November through the first two weeks in February, after they have lost their leaves. Transplanting during the non-growing season will reduce shock to the plant and increase transplantation success.

3. Transplanting Procedure.

a. Cut the plant back 3 to 6 feet from the ground or to 50 percent of its height (whichever is taller) by removing branches and stems above this height. The trunk and all stems measuring 1.0 inch or greater in diameter at ground level should be replanted. Any leaves remaining on the plant should be removed.

b. Excavate a hole of adequate size to receive the transplant.

c. Excavate the plant using a Vemeer spade, backhoe, front end

loader, or other suitable equipment, taking as much of the root ball as possible, and replant immediately at the conservation area. Move the plant only by the root ball. If the plant is to be moved and transplanted off site, secure the root ball with wire and wrap it with burlap. Dampen the burlap with water, as necessary, to keep the root ball wet. Do not let the roots dry out. Care should be taken to ensure that the soil is not dislodged from around the roots of the transplant. If the site receiving the transplant does not have adequate soil moisture, pre-wet the soil a day or two before transplantation.

d. The planting area must be at least 1,800 square feet for each elderberry transplant. The root ball should be planted so that its top is level with the existing ground. Compact the soil sufficiently so that settlement does not occur. As many as five (5) additional elderberry plantings (cuttings or seedlings) and up to five (5) associated native species plantings (see below) may also be planted within the 1,800 square foot area with the transplant. The transplant and each new planting should have its own watering basin measuring at least three (3) feet in diameter. Watering basins should have a continuous berm measuring approximately eight (8) inches wide at the base and six (6) inches high.

e. Saturate the soil with water. Do not use fertilizers or other supplements or paint the tips of stems with pruning substances, as the effects of these compounds on the beetle are unknown.

f. Monitor to ascertain if additional watering is necessary. If the soil is sandy and well-drained, plants may need to be watered weekly or twice monthly. If the soil is clayey and poorly-drained, it may not be necessary to water after the initial saturation. However, most transplants require watering through the first summer. A drip watering system and timer is ideal. However, in situations where this is not possible, a water truck or other apparatus may be used.

Plant Additional Seedlings or Cuttings

Each elderberry stem measuring 1.0 inch or greater in diameter at ground level that is adversely affected (i.e., transplanted or destroyed) must be replaced, in the conservation area, with elderberry seedlings or cuttings at a ratio ranging from 1:1 to 8:1 (new plantings to affected stems). Minimization ratios are listed and explained in Table 1. Stock of either seedlings or cuttings should be obtained from local sources. Cuttings may be obtained from the plants to be transplanted if the project site is in the vicinity of the conservation area. If the Service determines that the elderberry plants on the proposed project site are unsuitable candidates for transplanting, the Service may allow the applicant to plant seedlings or cuttings at higher than the stated ratios in Table 1 for each elderberry plant that cannot be transplanted.

Plant Associated Native Species

Studies have found that the beetle is more abundant in dense native plant communities with a mature overstory and a mixed understory. Therefore, a mix of native plants associated with the elderberry plants at the project site or similar sites will be planted at ratios ranging from 1:1 to 2:1 [native tree/plant species to each elderberry seedling or cutting (see Table 1)]. These native plantings must be monitored with the same survival criteria used for the elderberry seedlings (see below). Stock of saplings, cuttings, and seedlings should be obtained from local sources. If the parent stock is obtained from a distance greater than one mile from the conservation area, approval by the Service of the native plant donor sites must be obtained prior to initiation of the revegetation work. Planting or seeding the conservation area with native herbaceous species is encouraged. Establishing native grasses and forbs may discourage unwanted non-native species from becoming established or persisting at the conservation area. Only stock from local sources

should be used.

Examples

Example 1

The project will adversely affect beetle habitat on a vacant lot on the land side of a river levee. This levee now separates beetle habitat on the vacant lot from extant Great Valley Mixed Riparian Forest (Holland 1986) adjacent to the river. However, it is clear that the beetle habitat located on the vacant lot was part of a more extensive mixed riparian forest ecosystem extending farther from the river's edge prior to agricultural development and levee construction. Therefore, the beetle habitat on site is considered riparian. A total of two elderberry plants with at least one stem measuring 1.0 inch or greater in diameter at ground level will be affected by the proposed action. The two plants have a total of 15 stems measuring over 1.0 inch. No exit holes were found on either plant. Ten of the stems are between 1.0 and 3.0 inches in diameter and five of the stems are greater than 5.0 inches in diameter. The conservation area is suited for riparian forest habitat. Associated natives adjacent to the conservation area are box elder (Acer negundo californica), walnut (Juglans californica var. hindsii), sycamore (Platanus racemosa), cottonwood (Populus fremontii), willow (Salix gooddingii and S. laevigata), white alder (Alnus rhombifolia), ash (Fraxinus latifolia), button willow (Cephalanthus occidentalis), and wild grape (Vitis californica).

Minimization (based on ratios in Table 1):

• Transplant the two elderberry plants that will be affected to the conservation area.

• Plant 40 elderberry rooted cuttings (10 affected stems compensated at 2:1 ratio and 5 affected stems compensated at 4:1 ratio, cuttings planted:stems affected)

• Plant 40 associated native species (ratio of associated natives to elderberry plantings is 1:1 in areas with no exit holes):

5 saplings each of box elder, sycamore, and cottonwood

5 willow seedlings

5 white alder seedlings

5 saplings each of walnut and ash

3 California button willow

2 wild grape vines

Total: 40 associated native species

• Total area required is a minimum of 1,800 sq. ft. for one to five elderberry seedlings and up to 5 associated natives. Since, a total of 80 plants must be planted (40 elderberries and 40 associated natives), a total of 0.33 acre (14,400 square feet) will be required for conservation plantings. The conservation area will be seeded and planted with native grasses and forbs, and closely monitored and maintained throughout the monitoring period.

Example 2

The project will adversely affect beetle habitat in Blue Oak Woodland (Holland 1986). One elderberry plant with at least one stem measuring 1.0 inch or greater in diameter at ground level will be affected by the proposed action. The plant has a total of 10 stems measuring over 1.0 inch. Exit holes were found on the plant. Five of the stems are between 1.0 and 3.0 inches in diameter and five of the stems are between 3.0 and 5.0 inches in diameter. The conservation area is suited for elderberry savanna (non-riparian habitat). Associated natives adjacent to the conservation area are willow (Salix species), blue oak (Quercus douglasii), interior live oak (Q. wislizenii), sycamore, poison oak (Toxicodendron diversilobum), and wild grape.

Minimization (based on ratios in Table 1):

• Transplant the one elderberry plant that will be affected to the conservation area.

• Plant 30 elderberry seedlings (5 affected stems compensated at 2:1 ratio and 5 affected stems compensated at 4:1 ratio, cuttings planted:stems affected)

• Plant 60 associated native species (ratio of associated natives to elderberry plantings is 2:1 in areas with exit holes):

20 saplings of blue oak, 20 saplings of sycamore, and 20 saplings of willow, and seed and plant with a mixture of native grasses and forbs

• Total area required is a minimum of 1,800 sq. ft. for one to five elderberry seedlings and up to 5 associated natives. Since, a total of 90 plants must be planted (30 elderberries and 60 associated natives), a total of 0.37 acre (16,200 square feet) will be required for conservation plantings. The conservation area will be seeded and planted with native grasses and forbs, and closely monitored and maintained throughout the monitoring period.

Conservation Area—Provide Habitat for the Beetle in Perpetuity

The conservation area is distinct from the avoidance area (though the two may adjoin), and serves to receive and protect the transplanted elderberry plants and the elderberry and other native plantings. The Service may accept proposals for off-site conservation areas where appropriate.

1. Size. The conservation area must provide at least 1,800 square feet for each transplanted elderberry plant. As many as 10 conservation plantings (i.e., elderberry cuttings or seedlings and/or associated native plants) may be planted within the 1800 square foot area with each transplanted elderberry. An additional 1,800 square feet shall be provided for every additional 10 conservation plants. Each planting should have its own watering basin measuring approximately three feet in diameter. Watering basins should be constructed with a continuous berm measuring approximately eight inches wide at the base and six inches high.

The planting density specified above is primarily for riparian forest habitats or other habitats with naturally dense cover. If the conservation area is an open habitat (i.e., elderberry savanna, oak woodland) more area may be needed for the required plantings. Contact the Service for assistance if the above planting recommendations are not appropriate for the proposed conservation area.

No area to be maintained as a firebreak may be counted as conservation area. Like the avoidance area, the conservation area should connect with adjacent habitat wherever possible, to prevent isolation of beetle populations.

Depending on adjacent land use, a buffer area may also be needed between the

conservation area and the adjacent lands. For example, herbicides and pesticides are often used on orchards or vineyards. These chemicals may drift or runoff onto the conservation area if an adequate buffer area is not provided.

2. Long-Term Protection. The conservation area must be protected in perpetuity as habitat for the valley elderberry longhorn beetle. A conservation easement or deed restrictions to protect the conservation area must be arranged. Conservation areas may be transferred to a resource agency or appropriate private organization for long-term management. The Service must be provided with a map and written details identifying the conservation area; and the applicant must receive approval from the Service that the conservation area is acceptable prior to initiating the conservation program. A true, recorded copy of the deed transfer, conservation easement, or deed restrictions protecting the conservation area in perpetuity must be provided to the Service before project implementation.

Adequate funds must be provided to ensure that the conservation area is managed in perpetuity. The applicant must dedicate an endowment fund for this purpose, and designate the party or entity that will be responsible for long-term management of the conservation area. The Service must be provided with written documentation that funding and management of the conservation area (items 3-8 above) will be provided in perpetuity.

3. Weed Control. Weeds and other plants that are not native to the conservation area must be removed at least once a year, or at the discretion of the Service and the California Department of Fish and Game. Mechanical means should be used; herbicides are prohibited unless approved by the Service.

4. Pesticide and Toxicant Control. Measures must be taken to insure that no pesticides, herbicides, fertilizers, or other chemical agents enter the conservation area. No spraying of these agents must be done within one 100 feet of the area, or if they have the potential to drift, flow, or be washed into the area in the opinion of biologists or law enforcement personnel from the Service or the California Department of Fish and Game.

5. Litter Control. No dumping of trash or other material may occur within the conservation area. Any trash or other foreign material found deposited within the conservation area must be removed within 10 working days of discovery.

6. Fencing. Permanent fencing must be placed completely around the conservation area to prevent unauthorized entry by off-road vehicles, equestrians, and other parties that might damage or destroy the habitat of the beetle, unless approved by the Service. The applicant must receive written approval from the Service that the fencing is acceptable prior to initiation of the conservation program. The fence must be maintained in perpetuity, and must be repaired/replaced within 10 working days if it is found to be damaged. Some conservation areas may be made available to the public for appropriate recreational and educational opportunities with written approval from the Service. In these cases appropriate fencing and signs informing the public of the beetle’s threatened status and its natural history and ecology should be used and maintained in perpetuity.

7. Signs. A minimum of two prominent signs must be placed and maintained in perpetuity at the conservation area, unless otherwise approved by the Service. The signs should note that the site is habitat of the federally threatened valley elderberry longhorn beetle and, if appropriate, include information on the beetle's natural history and ecology. The signs must be approved by the Service. The signs must be repaired or replaced within 10 working days if they are found to be damaged or destroyed.

Monitoring

The population of valley elderberry longhorn beetles, the general condition of the conservation area, and the condition of the elderberry and associated native plantings in the conservation area must be monitored over a period of either ten (10) consecutive years or for seven (7) years over a 15-year period. The applicant may elect either 10 years of monitoring, with surveys and reports every year; or 15 years of monitoring, with surveys and reports on years 1, 2, 3, 5, 7, 10, and 15. The conservation plan provided by the applicant must state which monitoring schedule will be followed. No change in monitoring schedule will be accepted after the project is initiated. If conservation planting is done in stages (i.e., not all planting is implemented in the same time period), each stage of conservation planting will have a different start date for the required monitoring time.

Surveys. In any survey year, a minimum of two site visits between February 14 and June 30 of each year must be made by a qualified biologist. Surveys must include:

1. A population census of the adult beetles, including the number of beetles observed, their condition, behavior, and their precise locations. Visual counts must be used; mark-recapture or other methods involving handling or harassment must not be used.

2. A census of beetle exit holes in elderberry stems, noting their precise locations and estimated ages.

3. An evaluation of the elderberry plants and associated native plants on the site, and on the conservation area, if disjunct, including the number of plants, their size and condition.

4. An evaluation of the adequacy of the fencing, signs, and weed control efforts in the avoidance and conservation areas.

5. A general assessment of the habitat, including any real or potential threats to the beetle and its host plants, such as erosion, fire, excessive grazing, off-road vehicle use, vandalism, excessive weed growth, etc.

The materials and methods to be used in the monitoring studies must be reviewed and approved by the Service. All appropriate Federal permits must be obtained prior to initiating the field studies.

Reports. A written report, presenting and analyzing the data from the project monitoring, must be prepared by a qualified biologist in each of the years in which a monitoring survey is required. Copies of the report must be submitted by December 31 of the same year to the Service (Chief of Endangered Species, Sacramento Fish and Wildlife Office), and the Department of Fish and Game (Supervisor, Environmental Services, Department of Fish and Game, 1416 Ninth Street, Sacramento, California 95814; and Staff Zoologist, California Natural Diversity Data Base, Department of Fish and Game, 1220 S Street, Sacramento, California 95814). The report must explicitly address the status and progress of the transplanted and planted elderberry and associated native plants and trees, as well as any failings of the conservation plan and the steps taken to correct them. Any observations of beetles or fresh exit holes must be noted. Copies of original field notes, raw data, and photographs of the conservation area must be included with the report. A vicinity map of the site and maps showing where the individual adult beetles and exit holes were observed must be included. For the elderberry and associated native plants, the survival rate, condition, and size of the plants must be analyzed. Real and likely future threats must be addressed along with suggested remedies and preventative measures (e.g. limiting public access, more frequent removal of invasive non-native vegetation, etc.).

A copy of each monitoring report, along with the original field notes, photographs, correspondence, and all other pertinent material, should be deposited at the California Academy of Sciences (Librarian, California Academy of Sciences, Golden Gate Park, San Francisco, CA 94118) by December 31 of the year that monitoring is done and the report is prepared. The Service's Sacramento Fish and Wildlife Office should be provided with a copy of the receipt from

the Academy library acknowledging receipt of the material, or the library catalog number assigned to it.

Access. Biologists and law enforcement personnel from the California Department of Fish and Game and the Service must be given complete access to the project site to monitor transplanting activities. Personnel from both these agencies must be given complete access to the project and the conservation area to monitor the beetle and its habitat in perpetuity.

Success Criteria

A minimum survival rate of at least 60 percent of the elderberry plants and 60 percent of the associated native plants must be maintained throughout the monitoring period. Within one year of discovery that survival has dropped below 60 percent, the applicant must replace failed plantings to bring survival above this level. The Service will make any determination as to the applicant's replacement responsibilities arising from circumstances beyond its control, such as plants damaged or killed as a result of severe flooding or vandalism.

Service Contact

These guidelines were prepared by the Endangered Species Division of the Service's Sacramento Fish and Wildlife Office. If you have questions regarding these guidelines or to request a copy of the most recent guidelines, telephone (916) 414-6600, or write to:

U.S. Fish and Wildlife Service
Ecological Services
2800 Cottage Way, W-2605
Sacramento, CA 95825

Literature Cited

Barr, C. B. 1991. The distribution, habitat, and status of the valley elderberry longhorn beetle *Desmocerus californicus dimorphus*. U.S. Fish and Wildlife Service; Sacramento, California.

Holland, R.F. 1986. Preliminary descriptions of the terrestrial natural communities of California. Unpublished Report. State of California, The Resources Agency, Department of Fish and Game, Natural Heritage Division, Sacramento, California.

USFWS. 1980. Listing the valley elderberry longhorn beetle as a threatened species with critical habitat. Federal Register 45:52803-52807.

USFWS. 1984. Recovery plan for the valley elderberry longhorn beetle. U.S. Fish and Wildlife Service, Endangered Species Program; Portland, Oregon.

Table 1: Minimization ratios based on location (riparian vs. non-riparian), stem diameter of affected elderberry plants at ground level, and presence or absence of exit holes.

Location	Stems (maximum diameter at ground level)	Exit Holes on Shrub Y/N (quantify) [1]	Elderberry Seedling Ratio[2]	Associated Native Plant Ratio[3]
non-riparian	stems >=1" & =<3"	No:	1:1	1:1
		Yes:	2:1	2:1

non-riparian	stems >3" & <5"	No:	2:1	1:1
		Yes:	4:1	2:1
non-riparian	stems >=5"	No:	3:1	1:1
		Yes:	6:1	2:1
riparian	stems >=1" & <=3"	No:	2:1	1:1
		Yes:	4:1	2:1
riparian	stems > 3" & < 5"	No:	3:1	1:1
		Yes:	6:1	2:1
riparian	stems >=5"	No:	4:1	1:1
		Yes:	8:1	2:1

[1] All stems measuring one inch or greater in diameter at ground level on a single shrub are considered occupied when exit holes are present anywhere on the shrub.

[2] Ratios in the Elderberry Seedling Ratio column correspond to the number of cuttings or seedlings to be planted per elderberry stem (one inch or greater in diameter at ground level) affected by a project.

[3] Ratios in the Associated Native Plant Ratio column correspond to the number of associated native species to be planted per elderberry (seedling or cutting) planted.

Click for range map

Endangered Species Div., Sacramento Fish & Wildlife Office, U.S. Fish & Wildlife Service

STATE OF CALIFORNIA
THE RESOURCES AGENCY

CENTRAL VALLEY FLOOD PROTECTION BOARD

PERMIT NO. 18438 BD

This Permit is issued to:

Volcano Vista Farms
PO Box 9
c/o Michael Churkin
Meridian, California 95957

To abandon and remove existing irrigation pipeline and install a 24-inch-diameter, 1,660-foot-long welded steel pipe from the existing pump station along the overflow area of the right (west) bank levee of the Feather River to the waterside toe of the new setback levee; install an 18-inch-diameter, 510-foot-long welded steel pipe up and over new setback levee; remove distribution box at landside toe of existing Feather River Levee and place fill material on landside slope at upstream end of setback levee. The project is located south of Yuba City, approximately one mile northeast of the intersection of Highway 99 and the Garden Highway (Section 2, T13N, R3E, MDB&M, Levee District 1 Sutter, Feather River, Sutter County).

NOTE: Special Conditions have been incorporated herein which may place limitations on and/or require modification of your proposed project described above.

(SEAL)

Dated: APR 13 2009

Jay S. Punia
Executive Officer

GENERAL CONDITIONS:

ONE: This permit is issued under the provisions of Sections 8700 – 8723 of the Water Code.

TWO: Only work described in the subject application is authorized hereby.

THREE: This permit does not grant a right to use or construct works on land owned by the Sacramento and San Joaquin Drainage District or on any

other land.

FOUR: The approved work shall be accomplished under the direction and supervision of the State Department of Water Resources, and the permittee shall conform to all requirements of the Department and the Central Valley Flood Protection Board.

FIVE: Unless the work herein contemplated shall have been commenced within one year after issuance of this permit, the Board reserves the right to change any conditions in this permit as may be consistent with current flood control standards and policies of the Central Valley Flood Protection Board.

SIX: This permit shall remain in effect until revoked. In the event any conditions in this permit are not complied with, it may be revoked on 15 day's notice.

SEVEN: It is understood and agreed to by the permittee that the start of any work under this permit shall constitute an acceptance of the conditions in this permit and an agreement to perform work in accordance therewith.

EIGHT: This permit does not establish any precedent with respect to any other application received by the Central Valley Flood Protection Board.

NINE: The permittee shall, when required by law, secure the written order or consent from all other public agencies having jurisdiction.

TEN: The permittee is responsible for all personal liability and property damage which may arise out of failure on the permittee's part to perform the obligations under this permit. If any claim of liability is made against the State of California, or any departments thereof, the United States of America, a local district or other maintaining agencies and the officers, agents or employees thereof, the permittee shall defend and shall hold each of them harmless from each claim.

ELEVEN: The permittee shall exercise reasonable care to operate and maintain any work authorized herein to preclude injury to or damage to any works necessary to any plan of flood control adopted by the Board or the Legislature, or interfere with the successful execution, functioning or operation of any plan of flood control adopted by the Board or the Legislature.

TWELVE: Should any of the work not conform to the conditions of this permit, the permittee, upon order of the Central Valley Flood Protection Board, shall in the manner prescribed by the Board be responsible for the cost and expense to remove, alter, relocate, or reconstruct all or any part of the work herein approved.

SPECIAL CONDITIONS FOR PERMIT NO. 18438 BD

THIRTEEN: Construction between station 14+36.01 and the proposed flow distribution box under this permit shall not occur until the Army Corps of Engineers approves this project under 33USC Section 408. All conditions from Section 408 approval provided by the Corps of Engineers shall be incorporated into this permit as if fully set forth herein if they are not in conflict with the Central Valley Flood Protection Board's regulations (Title 23 California Code of Regulations).

FOURTEEN: All work approved by this permit shall be in accordance with the submitted drawings and specifications except as modified by special permit conditions herein. No further work, other than that approved by this permit, shall be done in the area without prior approval of the Central Valley Flood Protection Board.

FIFTEEN: The permittee shall maintain the permitted encroachment(s) and the project works within the utilized area in the manner required and as requested by the authorized representative of the Department of Water Resources, Levee District 1 or any other agency responsible for maintenance.

SIXTEEN: The permittee shall contact the Department of Water Resources by telephone, (916) 574-1213, and submit the enclosed postcard to schedule a preconstruction conference. Failure to do so at least 10 working days prior to start of work may result in delay of the project.

SEVENTEEN: The permittee shall provide supervision and inspection services acceptable to the Central Valley Flood Protection Board. A professional engineer registered in the State of California shall certify that all work was inspected and performed in accordance with submitted drawings, specifications, and permit conditions.

EIGHTEEN: The Central Valley Flood Protection Board, Department of Water Resources, and Levee District 1 shall not be held liable for any damages to the permitted encroachment(s) resulting from flood fight, operation, maintenance, inspection, or emergency repair.

NINETEEN: The permittee may be required, at permittee's cost and expense, to remove, alter, relocate, or reconstruct all or any part of the permitted encroachment(s) if removal, alteration, relocation, or reconstruction is necessary as part of or in conjunction with any present or future flood control plan or project or if damaged by any cause. If the permittee does not comply, the Central Valley Flood Protection Board may remove the encroachment(s) at the permittee's expense.

TWENTY: The permittee should contact the U.S. Army Corps of Engineers, Sacramento District, Regulatory Branch, 1325 J Street, Sacramento, California 95814, telephone (916) 557-5250, as compliance with Section 10 of the Rivers and Harbors Act and/or Section 404 of the Clean Water Act may be required.

TWENTY-ONE: The permittee shall be responsible for repair of any damages to the project levee and other flood control facilities due to construction, operation, or maintenance of the proposed project.

TWENTY-TWO: The permittee is responsible for all liability associated with construction, operation, and maintenance of the permitted facilities and shall defend and hold harmless the State of California, or any departments thereof, from any liability or claims of liability associated therewith.

TWENTY-THREE: The permitted encroachment(s) shall not interfere with operation and maintenance of the flood control project. If the permitted encroachment(s) are determined by any agency responsible for operation or maintenance of the flood control project to interfere, the permittee shall be required, at permittee's cost and expense, to modify or remove the permitted encroachment(s) under direction of the Central Valley Flood Protection Board or Department of Water Resources. If the permittee does not comply, the Central Valley Flood Protection Board may modify or remove the encroachment(s) at the permittee's expense.

TWENTY-FOUR: No construction work of any kind shall be done during the flood season from November 1 to April 15 without prior approval of the Central Valley Flood Protection Board.

TWENTY-FIVE: No excavation shall be made or remain in the levee section during the flood season from November 1 to April 15 without prior approval of the Central Valley Flood Protection Board.

TWENTY-SIX: No material stockpiles, temporary buildings, or equipment shall remain in the floodway during the flood season from November 1 to April 15.

TWENTY-SEVEN: During demolition/construction of the project, any and all anticipated or unanticipated conditions encountered which may impact levee integrity or flood control shall be brought to the attention of the Flood Project Inspector immediately and prior to continuation.

TWENTY-EIGHT: In the event existing revetment on the channel bank or levee slope is disturbed or displaced, it shall be restored to its original condition upon completion of the proposed installation.

TWENTY-NINE: Cleared trees and brush shall be completely burned or removed from the floodway, and downed trees or brush shall not remain in the floodway during the flood season from November 1 to April 15.

THIRTY: The pipes shall be placed in the center of an open trench 2 times the diameter of the pipes.

THIRTY-ONE: Pipe installed in the levee section and within 10 feet of the levee toes shall be new steel and at least 7 gauge. Steel pipe shall be corrosion-proofed externally with a coating of coal-tar enamel; asphalt-saturated felt wrap; cement mortar; or PVC or polyethylene tape wrapped to a thickness of 30 mils. Steel pipe shall be corrosion-proofed internally with a continuous lining of cement mortar or asphalt.

THIRTY-TWO: A suitable siphon breaker and protective housing shall be installed on the apex of the pipe and shall be located off the levee patrol road.

THIRTY-THREE: The pipeline shall be tested and confirmed free of leaks by X-ray, pressure tests, or other approved methods during construction or anytime after construction upon request by the Central Valley Flood Protection Board.

THIRTY-FOUR: The invert of the pipe through the levee section shall be above the design flood plane elevation of 64.2 feet, NGV Datum.

THIRTY-FIVE: All pipe joints within the levee section shall be butt welded.

THIRTY-SIX: The pipe shall be installed through the levee section at a right angle to the centerline of the levee.

THIRTY-SEVEN: All abandoned pipes shall be removed from the existing levee section and in the area 10 feet waterward of the waterward toe of the proposed setback levee.

THIRTY-EIGHT: The pipe shall be buried at least 24 inches below the levee slopes and 24 inches below the levee crown.

THIRTY-NINE: The pipe within the overflow area shall be buried with a minimum of 2 feet of cover.

FORTY: Backfill material for excavations in the area 10 feet waterward of the waterward toe of the proposed setback levee shall be placed in 4- to 6-inch layers and compacted to at least the density of the adjacent, firm, undisturbed material.

FORTY-ONE: Backfill material for excavations within the levee section and within 10 feet of the levee toes shall be placed in 4- to 6-inch layers, moisture conditioned above optimum moisture content, and compacted to a minimum of 90 percent relative compaction as measured by ASTM Method D1557-91.

FORTY-TWO: Density tests by a certified materials laboratory will be required to verify compaction of backfill within the levee section and within 10 feet of the levee toes.

FORTY-THREE: Location markers shall be placed near both levee toes for the buried pipe not surfacing near the levee toes.

FORTY-FOUR: All debris generated by this project shall be disposed of outside the floodway and off the levee section.

FORTY-FIVE: Upon completion of the project, the permittee shall submit as-built drawings to: Department of Water Resources, Flood Project Inspection Section, 3310 El Camino Avenue, Suite LL30, Sacramento, California 95821.

FORTY-SIX: In the event that levee or bank erosion injurious to the adopted plan of flood control occurs at or adjacent to the permitted encroachment(s), the permittee shall repair the eroded area and propose measures, to be approved by the Central Valley Flood Protection Board, to prevent further erosion.

FORTY-SEVEN: If the project, or any portion thereof, is to be abandoned in the future, the permittee or successor shall abandon the project under direction of the Central Valley Flood Protection Board and Department of Water Resources, at the permittee's or successor's cost and expense.

FORTY-EIGHT: The permittee shall comply with all conditions set forth in the letter from the Department of the Army dated March 26, 2009, which is attached to this permit as Exhibit A and is incorporated by reference.

e. That the proposed pipeline shall be clearly marked in the field such that its location can be easily established in a flood event/emergency repair action.

f. That in the event of forecasted high water, the applicant shall have a plan in place to prevent scour when the trench is open.

g. That construction between station 14+36.01 and the proposed flow distribution box shall be addressed with the Section 408 process for the Star Bend setback levee. Construction of this work shall not be allowed until Section 408 approval is obtained.

Based upon the information provided, no Section 10 or Section 404 permit is needed.

If you have any questions concerning our comments on this permit application, please contact Mr. Ryan Larson at (916) 557-7568 or Mr. Robert Murakami at (916) 557-6738.

Sincerely,

Kevin Knuuti, P.E.
Chief, Engineering Division

Copy Furnished:
Mr. Jeremy Arrich, Chief, Flood Project Integrity and Inspection Branch,
3310 El Camino Avenue, Suite LL30, Sacramento, CA 95821

EXHIBIT A

DEPARTMENT OF THE ARMY
U.S. Army Engineer District, Sacramento
Corps of Engineers
1325 J Street
Sacramento, California 95814-2922

REPLY TO
ATTENTION OF

Flood Protection and Navigation Section (18438)

MAR 26 2009

Mr. Jay Punia, Executive Officer
Central Valley Flood Protection Board
3310 El Camino Ave., Room LL40
Sacramento, CA 95821

Dear Mr. Punia:

We have reviewed a permit application by Volcano Vista Farms (application number 18438). This project includes abandoning portions and removing portions of an existing irrigation pipeline and installing a 1,660-foot long, 24-inch diameter welded steel pipe from an existing pump station on the waterside of the right bank levee of the Feather River to the waterside toe of the new setback levee (permit number 18191). One 18-inch diameter welded steel pipe (a maximum of 510 linear feet) is proposed to be installed from the waterside toe of the new setback levee, up and over the levee, to the new flow distribution box landward of the new setback levee. This project is located near the eastern boundary of Sutter County along the right bank of the Feather River at Star Bend Road, at 39.0113°N 121.5975°W NAD83, Sutter County, California.

The District Engineer has no objection to approval of this application by your Board from a flood control standpoint, subject to the following conditions:

a. That in the event trees and brush are cleared, they shall be properly disposed of by either complete burning or complete removal outside the limits of the project right-of-way.

b. That any debris generated by this project shall be disposed of outside the limits of the project works.

c. That no work shall be performed and no stockpiles of material or equipment shall remain in the floodway during the flood season of November 1 to April 15, unless otherwise approved in writing by your Board.

d. That the removed portion of pipe, appurtenances, foundations, and tie-downs, shall be completely removed from the project right-of-way. Backfill shall be satisfactory levee material compacted to a minimum 95% ASTM D 698.

STATE OF CALIFORNIA
THE RESOURCES AGENCY

CENTRAL VALLEY FLOOD PROTECTION BOARD

PERMIT NO. 18437 BD

This Permit is issued to:

Tudor Mutual Water Company
280 Wilkie Avenue
Yuba City, California 95992

To abandon and remove existing irrigation pipeline and install a 48-inch-diameter, 1,660-foot-long welded steel pipe from the existing pump station along the overflow area of the right (west) bank levee of the Feather River to the waterside toe of the new setback levee; install two 30-inch-diameter, 510-foot-long welded steel pipes up and over new setback levee; remove distribution box at landside toe of existing Feather River Levee and place fill material on landside slope at upstream end of setback levee. The project is located south of Yuba City, approximately one mile northeast of the intersection of Highway 99 and the Garden Highway (Section 2, T13N, R3E, MDB&M, Levee District 1 Sutter, Feather River, Sutter County).

NOTE: Special Conditions have been incorporated herein which may place limitations on and/or require modification of your proposed project described above.

(SEAL)

Dated: APR 13 2009

Jay S. Punia
Executive Officer

GENERAL CONDITIONS:

ONE: This permit is issued under the provisions of Sections 8700 – 8723 of the Water Code.

TWO: Only work described in the subject application is authorized hereby.

THREE: This permit does not grant a right to use or construct works on land owned by the Sacramento and San Joaquin Drainage District or on any other land.

DWR 3784 (Rev. 1/08)

FOUR: The approved work shall be accomplished under the direction and supervision of the State Department of Water Resources, and the permittee shall conform to all requirements of the Department and the Central Valley Flood Protection Board.

FIVE: Unless the work herein contemplated shall have been commenced within one year after issuance of this permit, the Board reserves the right to change any conditions in this permit as may be consistent with current flood control standards and policies of the Central Valley Flood Protection Board.

SIX: This permit shall remain in effect until revoked. In the event any conditions in this permit are not complied with, it may be revoked on 15 day's notice.

SEVEN: It is understood and agreed to by the permittee that the start of any work under this permit shall constitute an acceptance of the conditions in this permit and an agreement to perform work in accordance therewith.

EIGHT: This permit does not establish any precedent with respect to any other application received by the Central Valley Flood Protection Board.

NINE: The permittee shall, when required by law, secure the written order or consent from all other public agencies having jurisdiction.

TEN: The permittee is responsible for all personal liability and property damage which may arise out of failure on the permittee's part to perform the obligations under this permit. If any claim of liability is made against the State of California, or any departments thereof, the United States of America, a local district or other maintaining agencies and the officers, agents or employees thereof, the permittee shall defend and shall hold each of them harmless from each claim.

ELEVEN: The permittee shall exercise reasonable care to operate and maintain any work authorized herein to preclude injury to or damage to any works necessary to any plan of flood control adopted by the Board or the Legislature, or interfere with the successful execution, functioning or operation of any plan of flood control adopted by the Board or the Legislature.

TWELVE: Should any of the work not conform to the conditions of this permit, the permittee, upon order of the Central Valley Flood Protection Board, shall in the manner prescribed by the Board be responsible for the cost and expense to remove, alter, relocate, or reconstruct all or any part of the work herein approved.

SPECIAL CONDITIONS FOR PERMIT NO. 18437 BD

THIRTEEN: Construction between station 14+38.26 and the proposed flow distribution box under this permit shall not occur until the Army corps of Engineers approves the project under 33 USC Section 408. All conditions from Section 408 approval provided by the Corps of Engineers shall be incorporated into this permit as if fully set forth herein if they are not in conflict with the Central Valley Flood Protection Board's regulations (Title 23 California Code of Regulations).

FOURTEEN: All work approved by this permit shall be in accordance with the submitted drawings and specifications except as modified by special permit conditions herein. No further work, other than that approved by this permit, shall be done in the area without prior approval of the Central Valley Flood Protection Board.

FIFTEEN: The permittee shall maintain the permitted encroachment(s) and the project works within the utilized area in the manner required and as requested by the authorized representative of the Department of Water Resources, Levee District 1 or any other agency responsible for maintenance.

SIXTEEN: The permittee shall contact the Department of Water Resources by telephone, (916) 574-1213, and submit the enclosed postcard to schedule a preconstruction conference. Failure to do so at least 10 working days prior to start of work may result in delay of the project.

SEVENTEEN: The permittee shall provide supervision and inspection services acceptable to the Central Valley Flood Protection Board. A professional engineer registered in the State of California

shall certify that all work was inspected and performed in accordance with submitted drawings, specifications, and permit conditions.

EIGHTEEN: The Central Valley Flood Protection Board, Department of Water Resources, and Levee District 1 shall not be held liable for any damages to the permitted encroachment(s) resulting from flood fight, operation, maintenance, inspection, or emergency repair.

NINETEEN: The permittee may be required, at permittee's cost and expense, to remove, alter, relocate, or reconstruct all or any part of the permitted encroachment(s) if removal, alteration, relocation, or reconstruction is necessary as part of or in conjunction with any present or future flood control plan or project or if damaged by any cause. If the permittee does not comply, the Central Valley Flood Protection Board may remove the encroachment(s) at the permittee's expense.

TWENTY: The permittee should contact the U.S. Army Corps of Engineers, Sacramento District, Regulatory Branch, 1325 J Street, Sacramento, California 95814, telephone (916) 557-5250, as compliance with Section 10 of the Rivers and Harbors Act and/or Section 404 of the Clean Water Act may be required.

TWENTY-ONE: The permittee shall be responsible for repair of any damages to the project levee and other flood control facilities due to construction, operation, or maintenance of the proposed project.

TWENTY-TWO: The permittee is responsible for all liability associated with construction, operation, and maintenance of the permitted facilities and shall defend and hold harmless the State of California, or any departments thereof, from any liability or claims of liability associated therewith.

TWENTY-THREE: The permitted encroachment(s) shall not interfere with operation and maintenance of the flood control project. If the permitted encroachment(s) are determined by any agency responsible for operation or maintenance of the flood control project to interfere, the permittee shall be required, at permittee's cost and expense, to modify or remove the permitted encroachment(s) under direction of the Central Valley Flood Protection Board or Department of Water Resources. If the permittee does not comply, the Central Valley Flood Protection Board may modify or remove the encroachment(s) at the permittee's expense.

TWENTY-FOUR: No construction work of any kind shall be done during the flood season from November 1 to April 15 without prior approval of the Central Valley Flood Protection Board.

TWENTY-FIVE: No excavation shall be made or remain in the levee section during the flood season from November 1 to April 15 without prior approval of the Central Valley Flood Protection Board.

TWENTY-SIX: No material stockpiles, temporary buildings, or equipment shall remain in the floodway during the flood season from November 1 to April 15.

TWENTY-SEVEN: During demolition/construction of the project, any and all anticipated or unanticipated conditions encountered which may impact levee integrity or flood control shall be brought to the attention of the Flood Project Inspector immediately and prior to continuation.

TWENTY-EIGHT: In the event existing revetment on the channel bank or levee slope is disturbed or

displaced, it shall be restored to its original condition upon completion of the proposed installation.

TWENTY-NINE: Cleared trees and brush shall be completely burned or removed from the floodway, and downed trees or brush shall not remain in the floodway during the flood season from November 1 to April 15.

THIRTY: The pipes shall be placed in the center of an open trench 2 times the diameter of the pipe.

THIRTY-ONE: Pipe installed in the levee section and within 10 feet of the levee toes shall be new steel and at least 3 gauge. Steel pipe shall be corrosion-proofed externally with a coating of coal-tar enamel; asphalt-saturated felt wrap; cement mortar; or PVC or polyethylene tape wrapped to a thickness of 30 mils. Steel pipe shall be corrosion-proofed internally with a continuous lining of cement mortar or asphalt.

THIRTY-TWO: A suitable siphon breaker and protective housing shall be installed on the apex of each pipe and shall be located off the levee patrol road.

THIRTY-THREE: The pipelines shall be tested and confirmed free of leaks by X-ray, pressure tests, or other approved methods during construction or anytime after construction upon request by the Central Valley Flood Protection Board.

THIRTY-FOUR: The invert of the pipes through the levee section shall be above the design flood plane elevation of 64.2 feet, NGV Datum.

THIRTY-FIVE: All pipe joints within the levee section shall be butt welded.

THIRTY-SIX: The pipes shall be installed through the levee section at a right angle to the centerline of the levee.

THIRTY-SEVEN: All abandoned pipes shall be removed from in the existing levee section and in the area 10 feet waterward of the waterward toe of the proposed setback levee.

THIRTY-EIGHT: The pipe shall be buried at least 24 inches below the levee slopes and 24 inches below the levee crown.

THIRTY-NINE: The pipe within the overflow area shall be buried with a minimum of 2 feet of cover.

FORTY: Backfill material for excavations in the area 10 feet waterward of the waterward toe of the proposed setback levee shall be placed in 4- to 6-inch layers and compacted to at least the density of the adjacent, firm, undisturbed material.

FORTY-ONE: Backfill material for excavations within the levee section and within 10 feet of the levee toes shall be placed in 4- to 6-inch layers, moisture conditioned above optimum moisture content, and compacted to a minimum of 90 percent relative compaction as measured by ASTM Method D1557-91.

FORTY-TWO: Density tests by a certified materials laboratory will be required to verify compaction of backfill within the levee section and within 10 feet of the levee toes.

FORTY-THREE: Location markers shall be placed near both levee toes for the buried pipes not surfacing near the levee toes.

FORTY-FOUR: All debris generated by this project shall be disposed of outside the floodway and off the levee section.

FORTY-FIVE: Upon completion of the project, the permittee shall submit as-built drawings to: Department of Water Resources, Flood Project Inspection Section, 3310 El Camino Avenue, Suite LL30, Sacramento, California 95821.

FORTY-SIX: In the event that levee or bank erosion injurious to the adopted plan of flood control occurs at or adjacent to the permitted encroachment(s), the permittee shall repair the eroded area and propose measures, to be approved by the Central Valley Flood Protection Board, to prevent further erosion.

FORTY-SEVEN: If the project, or any portion thereof, is to be abandoned in the future, the permittee or successor shall abandon the project under direction of the Central Valley Flood Protection Board and Department of Water Resources, at the permittee's or successor's cost and expense.

FORTY-EIGHT: The permittee shall comply with all conditions set forth in the letter from the Department of the Army dated March 26, 2009, which is attached to this permit as Exhibit A and is incorporated by reference.

EXHIBIT A

DEPARTMENT OF THE ARMY
U.S. Army Engineer District, Sacramento
Corps of Engineers
1325 J Street
Sacramento, California 95814-2922

REPLY TO
ATTENTION OF

MAR 26 2009

Flood Protection and Navigation Section (18437)

Mr. Jay Punia, Executive Officer
Central Valley Flood Protection Board
3310 El Camino Ave., Room LL40
Sacramento, CA 95821

Dear Mr. Punia:

We have reviewed a permit application by Tudor Mutual Water Company (application number 18437). This project includes abandoning portions and removing portions of an existing irrigation pipeline, and installing a 1,660-foot long, 48-inch diameter welded steel pipe from an existing pump station on the waterside of the right bank levee of the Feather River to the waterside toe of a new setback levee (permit number 18191). Two 30-inch diameter welded steel pipes (a maximum of 510 linear feet each) are proposed to be installed from the waterside toe of the new setback levee, up and over the levee, to a new flow distribution box landward of the new setback levee. This project is located near the eastern boundary of Sutter County along the right bank of the Feather River at Star Bend Road, at 39.0113°N 121.5975°W NAD83, Sutter County, California.

The District Engineer has no objection to approval of this application by your Board from a flood control standpoint, subject to the following conditions:

a. That in the event trees and brush are cleared, they shall be properly disposed of by either complete burning or complete removal outside the limits of the project right-of-way.

b. That any debris generated by this project shall be disposed of outside the limits of the project right-of-way.

c. That no work shall be performed and no stockpiles of material or equipment shall remain in the floodway during the flood season of November 1 to April 15, unless otherwise approved in writing by your Board.

d. That the removed portion of pipe, appurtenances, foundations, and tie-downs, shall be completely removed from the project right-of-way. Backfill shall be satisfactory levee material compacted to a minimum 95% ASTM D 698.

e. That the proposed pipeline shall be clearly marked in the field such that its location can be easily established in a flood event/emergency repair action.

f. That in the event of forecasted high water, the applicant shall have a plan in place to prevent scour when the trench is open.

g. That construction between station 14+38.26 and the proposed flow distribution box shall be addressed with the Section 408 process for the Star Bend setback levee. Construction of this work shall not be allowed until Section 408 approval is obtained.

Based upon the information provided, no Section 10 or Section 404 permit is needed.

If you have any questions concerning our comments on this permit application, please contact Mr. Ryan Larson at (916) 557-7568 or Mr. Robert Murakami at (916) 557-6738.

Sincerely,

Kevin Knuuti, P.E.
Chief, Engineering Division

Copy Furnished:
Mr. Jeremy Arrich, Chief, Flood Project Integrity and Inspection Branch,
3310 El Camino Avenue, Suite LL30, Sacramento, CA 95821

STATE OF CALIFORNIA
THE RESOURCES AGENCY

CENTRAL VALLEY FLOOD PROTECTION BOARD

PERMIT NO. 18191 BD

This Permit is issued to:

Levee District No. 1, Sutter County
243 Second Street
Yuba City, California 95991

To remove approximately 4,500 linear-feet of existing project levee and construct a 3,400-linear-foot-long setback levee (LM 3.75 to 4.5) with a slurry cutoff wall; and modifying the existing pipelines at Star Bend on the right (west) bank of the Feather River. The project is located south of Yuba City, northeast of the intersection of Highway 99 and Garden Highway (Section 1&2, T13N, R3E, MDB&M, Levee District 1 Sutter, Feather River, Sutter County).

NOTE: Special Conditions have been incorporated herein which may place limitations on and/or require modification of your proposed project described above.

(SEAL)

Dated: MAY 11 2009

Jacy S. Punia
Executive Officer

GENERAL CONDITIONS:

ONE: This permit is issued under the provisions of Sections 8700 – 8723 of the Water Code.

TWO: Only work described in the subject application is authorized hereby.

THREE: This permit does not grant a right to use or construct works on land owned by the Sacramento and San Joaquin Drainage District or on any other land.

FOUR: The approved work shall be accomplished under the direction and supervision of the State Department of Water Resources, and the permittee shall conform to all requirements of the Department and the Central Valley Flood Protection Board.

FIVE: Unless the work herein contemplated shall have been commenced within one year after issuance of this permit, the Board reserves the right to change any conditions in this permit as may be consistent with current flood control standards and policies of the Central Valley Flood Protection

Board.

SIX: This permit shall remain in effect until revoked. In the event any conditions in this permit are not complied with, it may be revoked on 15 day's notice.

SEVEN: It is understood and agreed to by the permittee that the start of any work under this permit shall constitute an acceptance of the conditions in this permit and an agreement to perform work in accordance therewith.

EIGHT: This permit does not establish any precedent with respect to any other application received by the Central Valley Flood Protection Board.

NINE: The permittee shall, when required by law, secure the written order or consent from all other public agencies having jurisdiction.

TEN: The permittee is responsible for all personal liability and property damage which may arise out of failure on the permittee's part to perform the obligations under this permit. If any claim of liability is made against the State of California, or any departments thereof, the United States of America, a local district or other maintaining agencies and the officers, agents or employees thereof, the permittee shall defend and shall hold each of them harmless from each claim.

ELEVEN: The permittee shall exercise reasonable care to operate and maintain any work authorized herein to preclude injury to or damage to any works necessary to any plan of flood control adopted by the Board or the Legislature, or interfere with the successful execution, functioning or operation of any plan of flood control adopted by the Board or the Legislature.

TWELVE: Should any of the work not conform to the conditions of this permit, the permittee, upon order of the Central Valley Flood Protection Board, shall in the manner prescribed by the Board be responsible for the cost and expense to remove, alter, relocate, or reconstruct all or any part of the work herein approved.

SPECIAL CONDITIONS FOR PERMIT NO. 18191 BD

THIRTEEN: No construction shall occur until the Army Corps of Engineers approves the project under 33 USC Section 408. The approval letter shall be incorporated into this permit as Exhibit A and all conditions from Section 408 approval provided by the Corps of Engineers shall be incorporated into this permit as if fully set forth herein if they are not in conflict with the Central Valley Flood Protection Board's regulations (Title 23 California Code of regulations).

FOURTEEN: No work authorized by this permit shall be performed until the Department of Water Resources have received, reviewed, and approved in writing, a complete set of final submitted plans, drawings, and specifications for the project. The Central Valley Flood Protection Board shall have up to 30 days after receipt of plans, drawings, and specifications for the review process. The Central Valley Flood Protection Board and/or the Department of Water Resources may extend this review period up to 15 days by written notification.

FIFTEEN: All addendums or other changes made to the submitted documents by the permittee after issuance of this permit are subject to submittal and review for approval by the Central Valley Flood Protection Board prior to incorporation into the permitted project. Upon review and approval of any new submitted documents the permit shall be revised, if needed, prior to the construction related to the proposed changes. The Central Valley Flood Protection Board shall have up to 30 days after receipt of any documents, plans, drawings and specifications for review and approval. The Central Valley Flood Protection Board may extend this review and approval period up to 15 days by written notification.

SIXTEEN: The mitigation measures approved by the permittee and found in its Mitigation and Monitoring Reporting Plan (MMRP) are made a condition of this permit. The permittee shall

implement all such mitigation measures. However, the measures in the MMRP may be modified to accommodate changed circumstances or new information not triggering the need for subsequent or supplemental analysis under CEQA Guidelines sections 15062 and 15063 with advance notice of the proposed changes and submittal of supporting documentation for review and comment to the Environmental Scientist of the Central Valley Flood Protection Board.

SEVENTEEN: The permittee shall comply with all conditions set forth in the letter from the Deparment of the Army dated April 03, 2009, which is attached to this permit as Exhibit A and is incorporated by reference.

EIGHTEEN: Within three years from completion of the construction of the work authorized under this permit, the permittee shall provide the Sacramento and San Joaquin Drainage District, acting by and through the Central Valley Flood Protection Board of the State of California, a fee interest or a permanent easement granting all flood control rights upon, over and across the property to be occupied by the existing or to-be-constructed levee and to-be-reconstructed levee, including the area of the backup levee, cutoff walls and the tie-ins to the existing federal project levees. The easement must include the area within the floodway, the levee section, and the area within fifty (50) feet in width adjacent to the landward levee toe if the area is not presently encumbered by a Central Valley Flood Protection Board easement. For information regarding existing Central Valley Flood Protection Board easements, please contact J. D. Asis at (916) 653-3947.

NINETEEN: All work approved by this permit shall be in accordance with the final (100%) submitted drawings and specifications except as modified by special permit conditions herein. No further work, other than that approved by this permit, shall be done in the area without prior approval of the Central Valley Flood Protection Board.

TWENTY: Prior to commencement of work, the permittee shall create a photo record, including associated descriptions, of existing levee conditions. The photo record shall be certified (signed and stamped) by a licensed land surveyor or professional engineer registered in the State of California and submitted to the Central Valley Flood Protection Board within 30 days of beginning the project.

TWENTY-ONE: Upon completion of the project, the permittee shall perform a levee crown profile survey and create a photo record, including associated descriptions, of "as-built" levee conditions. The levee crown profile survey and photo record shall be certified (stamped and signed) by a licensed land surveyor or professional engineer registered in the State of California and submitted to the Central Valley Flood Protection Board within 120 days of project completion.

TWENTY-TWO: The permittee shall maintain the permitted encroachment(s) and the project works within the utilized area in the manner required and as requested by the authorized representative of the Department of Water Resources or any other agency responsible for maintenance.

TWENTY-THREE: The permittee shall contact the Department of Water Resources by telephone, (916) 574-0648, and submit the enclosed postcard to schedule a preconstruction conference. Failure to do so at least 10 working days prior to start of work may result in delay of the project.

TWENTY-FOUR: Prior to starting construction under this permit, the permittee shall contact the Department of Water Resources regarding inspection of the project during construction for EIP purposes.

TWENTY-FIVE: The permittee shall provide supervision and inspection services acceptable to the Central Valley Flood Protection Board.

TWENTY-SIX: Within 120 days of completion of the project, the permittee shall submit to the Central Valley Flood Protection Board a certification report, stamped and signed by a professional engineer registered in the State of California, certifying that the work was inspected and performed in accordance with the Central Valley Flood Protection Board permit conditions and submitted drawings and specifications.

TWENTY-SEVEN: Within 120 days of completion of the project, the permittee shall submit to the Central Valley Flood Protection Board proposed revisions to the Corps of Engineers, Supplement to Standard Operation and Maintainance Manual, Sacramento River Flood Control Project, Unit 144 and the associated as-built drawings for system alterations approved by this permit that are to be incorporated into the federal Sacramento River Flood Control Project.

TWENTY-EIGHT: If FEMA certification of the levee by the U. S. Army Corps of Engineers is being considered, the project proponent should contact the U. S. Army Corps of Engineers regarding inspection of the project during construction for FEMA certification purposes.

TWENTY-NINE: The permittee shall contact the U. S. Army Corps of Engineers regarding inspection of the project during construction as the proposed work is an alteration to the existing Federal Flood Control Project that will be incorporated into the Sacramento River Flood Control Project, an adopted plan of flood control.

THIRTY: The Central Valley Flood Protection Board and Department of Water Resources shall not be held liable for any damages to the permitted encroachment(s) resulting from flood fight, operation, maintenance, inspection, or emergency repair.

THIRTY-ONE: The permittee may be required, at permittee's cost and expense, to remove, alter, relocate, or reconstruct all or any part of the permitted encroachment(s) if removal, alteration, relocation, or reconstruction is necessary as part of or in conjunction with any present or future flood control plan or project or if damaged by any cause. If the permittee does not comply, the Central Valley Flood Protection Board may remove the encroachment(s) at the permittee's expense.

THIRTY-TWO: The permittee should contact the U.S. Army Corps of Engineers, Sacramento District, Regulatory Branch, 1325 J Street, Sacramento, California 95814, telephone (916) 557-5250, as compliance with Section 10 of the Rivers and Harbors Act and/or Section 404 of the Clean Water Act may be required.

THIRTY-THREE: The permittee shall be responsible for repair of any damages to the project levee and other flood control facilities due to construction, operation, or maintenance of the proposed project.

THIRTY-FOUR: The permittee is responsible for all liability associated with construction, operation, and maintenance of the permitted facilities and shall defend and hold harmless the State of California, or any departments thereof, from any liability or claims of liability associated therewith.

THIRTY-FIVE: If the project, or any portion thereof, is to be abandoned in the future, the permittee or successor shall abandon the project under direction of the Central Valley Flood Protection Board and Department of Water Resources, at the permittee's or successor's cost and expense.

THIRTY-SIX: Upon completion of the project, the permittee shall submit as-built drawings to: Department of Water Resources, Flood Project Inspection Section, 3310 El Camino Avenue, Suite LL30, Sacramento, California 95821.

THIRTY-SEVEN: No construction work of any kind shall be done during the flood season from November 1 to April 15 without prior approval of the Central Valley Flood Protection Board.

THIRTY-EIGHT: Cleared trees and brush shall be completely burned or removed from the floodway, and downed trees or brush shall not remain in the floodway during the flood season from November 1 to April 15.

THIRTY-NINE: No material stockpiles, temporary buildings, or equipment shall remain in the floodway during the flood season from November 1 to April 15.

FORTY: The permitted encroachment(s) shall not interfere with operation and maintenance of the flood control project. If the permitted encroachment(s) are determined by any agency responsible for operation or maintenance of the flood control project to interfere, the permittee shall be required, at permittee's cost and expense, to modify or remove the permitted encroachment(s) under direction of the Central Valley Flood Protection Board or Department of Water Resources. If the permittee does not comply, the Central Valley Flood Protection Board may modify or remove the encroachment(s) at the permittee's expense.

FORTY-ONE: During demolition/construction of the project, any and all anticipated or unanticipated conditions encountered which may impact levee integrity or flood control shall be brought to the attention of the Flood Project Inspector immediately and prior to continuation.

FORTY-TWO: The stability of the levee shall be maintained at all times during construction.

FORTY-THREE: Excavations below the design flood plane and within the levee section or within 10 feet of the projected waterward and landward levee slopes shall have side slopes no steeper than 1 horizontal to 1 vertical. Flatter slopes may be required to ensure stability of the excavation.

FORTY-FOUR: A profile of the levee crown roadway and access ramps that will be utilized for access to and from the borrow area shall be submitted to the Central Valley Flood Protection Board prior to commencement of excavation.

FORTY-FIVE: The haul ramps and utilized levee crown roadway shall be maintained in a manner prescribed by the authorized representative of the Department of Water Resources or any other agency responsible for maintenance.

FORTY-SIX: Any damage to the levee crown roadway or access ramps that will be utilized for access for this project shall be promptly repaired to the condition that existed prior to this project.

FORTY-SEVEN: Equipment used in the construction of the cutoff walls shall not exceed live-load

surcharge to a level that causes or contributes to the instability of the levee during construction operations.

FORTY-EIGHT: Fluid pressures in the cutoff wall construction zones shall be carefully monitored and controlled to minimize the potential for hydrofracturing.

FORTY-NINE: The permittee shall be responsible for all damages due to settlement, consolidation, or heave from any construction-induced activities.

FIFTY: Excess bentonite or other cutoff wall fluids shall be properly disposed of outside of the floodway. The bentonite or other cutoff wall fluids shall not be used as backfill material during construction or reconstruction of the levee.

FIFTY-ONE: All fencing, gates and signs removed during construction of this project shall be replaced in kind and at the original locations. If it is necessary to relocate any fence, gate or sign, the permittee is required to obtain written approval from the Central Valley Flood Control Board prior to installation at a new location if not shown on the submitted plans.

FIFTY-TWO: All temporary fencing, gates and signs shall be removed upon completion of the project.

FIFTY-THREE: Any pipe or conduit being reinstalled in the levee section or within fifty (50) feet of both the waterward and landward levee toes shall meet Title 23 standards.

FIFTY-FOUR: Fill on the levee slopes shall be keyed into the existing levee section with each lift.

FIFTY-FIVE: Backfill material for excavations within the existing levee sections, the new levee and within 10 feet of the levee toes of both levees shall be placed in 4- to 6-inch layers, moisture conditioned above optimum moisture content, and compacted to a minimum of 95 percent relative compaction as measured by ASTM Method D698.

FIFTY-SIX: Density tests by a certified materials laboratory will be required to verify compaction of backfill within the levee section and within ten (10) feet of the levee toes on both the existing and new levee sections.

FIFTY-SEVEN: Earthen material meeting the requirements designated in Condition Fifty-Nine shall be used when constructing the backup levee or reconstructing the degraded areas of the existing levee, and no cuts shall remain in the levee section upon completion.

FIFTY-EIGHT: Fill material shall be placed only within the area indicated on the approved plans.

FIFTY-NINE: All fill material shall be imported impervious material with 20 percent or more passing the No. 200 sieve, a plasticity index of 8 or more, and a liquid limit of less than 50 and free of lumps or stones exceeding 3 inches in greatest dimension, vegetative matter, or other unsatisfactory material.

SIXTY: The fill surface areas shall be graded to direct drainage away from the toes of the levees.

SIXTY-ONE: The slopes of the proposed and reconstructed levees shall be no steeper than 3 horizontal to 1 vertical on the water side and 2 horizontal to 1 vertical on the land side.

SIXTY-TWO: The new and reconstructed crown roadway and access ramps shall be surfaced with a minimum of 4 inches of compacted, Class 2, aggregate base (Caltrans Specification 26-1.02A).

SIXTY-THREE: Aggregate base material shall be compacted to a relative compaction of not less than 95 percent per ASTM Method D1557-91, with a moisture content sufficient to obtain the required compaction.

SIXTY-FOUR: The project site including the levee sections and access ramps shall be restored to at least the condition that existed prior to commencement of work and there shall be no visible trace of the cutoff walls.

SIXTY-FIVE: All debris generated by this project shall be disposed of outside the floodway and off the levee sections.

SIXTY-SIX: The permittee shall replant or reseed the levee slopes to restore sod, grass, or other non-woody ground covers if damaged during project work.

SIXTY-SEVEN: In the event existing revetment on the channel banks or levee slopes is disturbed or displaced, it shall be restored to its original condition upon completion of the proposed installation.

SIXTY-EIGHT: In the event that levee or bank erosion injurious to the adopted plan of flood control occurs at or adjacent to the permitted encroachment(s), the permittee shall repair the eroded area and propose measures, to be approved by the Central Valley Flood Protection Board, to prevent further erosion.

SIXTY-NINE: No material, other than temporarily stored materials during construction, shall be stockpiled closer than 50 feet from the landward toe of the project or new levees.

SEVENTY: Any damage caused to the levees during placement or removal of the stockpiled material shall be repaired.

SEVENTY-ONE: All reconstructed and new pipelines shall be tested and confirmed free of leaks by X-ray, pressure tests, or other approved methods during construction or anytime after construction upon request by the Central Valley Flood Protection Board.

SEVENTY-TWO: All abandoned piping, conduits and appurtenances shall be removed from the levee section and areas encompassed by the easements as defined by this permit.

SEVENTY-THREE: Any additional encroachment(s) in the floodway, on or in the levee section and within ten (10) feet of the landward levee toe by the permittee or other parties require an approved permit from the Central Valley Flood Protection Board and shall be in compliance with the Central Valley Flood Protection Board's regulations (Title 23 California Code of Regulations).

SEVENTY-FOUR: By acceptance of this permit, the permittee acknowledges the authority of the Central Valley Flood Control Board to regulate all future encroachments along this levee reach

including those that may encroach upon alterations approved by this permit prior to incorporation into the federal Sacramento River Flood Control Project by the U. S. Army Corps of Engineers.

SEVENTY-FIVE: If the permittee or successor does not comply with the conditions of this permit and an enforcement by the Central Valley Flood Protection Board is required, the permittee or successor shall be responsible for bearing all costs associated with the enforcement action, including reasonable attorney's fees.

SEVENTY-SIX: The permittee acknowledges that some portions of the levee may be overbuilt to account for settlement and that upon adoption of the updated Central Valley Flood Managenent Plan the permittee shall perform a levee crown survey of all levee crown covered by this permit and said profile shall be compared to the levee crown profile adopted in the updated Central Vallet Flood Management Plan. The permittee shall ensure that the levee crown does not exceed the updated Central Valley Flood Management Plan.

SEVENTY-SEVEN: The permittee shall not start construction of the foundation cutoff wall until the permittee can assure the Central Valley Flood Protection Board that the backup levee can be completely constructed in one construction season. If unforseen circumstances occur that could jeopardise the assurance given the permittee must have a mitigation plan to address those circumstances as soon as they are encountered and approved by the Central Valley Flood Protection Board with Board staff participation as to the mitigation.

EXHIBIT A

DEPARTMENT OF THE ARMY
U.S. Army Engineer District, Sacramento
Corps of Engineers
1325 J Street
Sacramento, California 95814-2922

REPLY TO
ATTENTION OF

Flood Protection and Navigation Section (18191)

Mr. Jay Punia, Executive Officer
Central Valley Flood Protection Board
3310 El Camino Ave. Rm. LL40
Sacramento, California 95821

APR 03 2009

Dear Mr. Punia:

We have reviewed a permit application by Levee District No. 1, Sutter County (application number 18191). This project includes removing approximately 1.5 miles of existing project levee and constructing a 3,400 foot long setback levee (river mile 16.75 to 18.25) with a slurry cutoff wall, and modifying the existing pipelines at Star Bend on the right (west) bank of the Feather River. This project is located south of Yuba City, at 39.0074°N 121.5997°W NAD83, Sutter County, California.

The District Engineer has no objection to conditional approval of this application by your Board from a flood control standpoint, subject to the following conditions:

a. That the permit shall be subject to HQ USACE issuing Section 408 approval. If HQ USACE disapproves the Section 408 request, the Central Valley Flood Protection Board shall notify the applicant that the conditional permit is no longer valid.

b. That the modifications to the existing pipelines shall be subject to conditions outlined in our letters dated March 26, 2009 for permits 18437 and 18438.

c. That no stockpiles of material or equipment shall remain in the floodway during the flood season of November 1 to April 15.

d. That in the event trees and brush are cleared, they shall be grubbed and properly disposed of either by complete burning or complete removal outside the limits of the project right-of-way.

Based upon the information provided, no Section 10 or Section 404 permit is needed.

If you have any questions concerning our comments on this permit application, please contact Mr. Ryan Larson at (916) 557-7568 or Mr. Robert Murakami at (916) 557-6738.

Sincerely,

Kevin Knuuti, P.E.
Chief, Engineering Division

Copy Furnished:
Mr. Jeremy Arrich, Chief, Flood Project Integrity and Inspection Branch,
3310 El Camino Avenue, Suite LL30, Sacramento, CA 95821

STATE OF CALIFORNIA

EMERGENCY FLOOD FIGHTING Methods

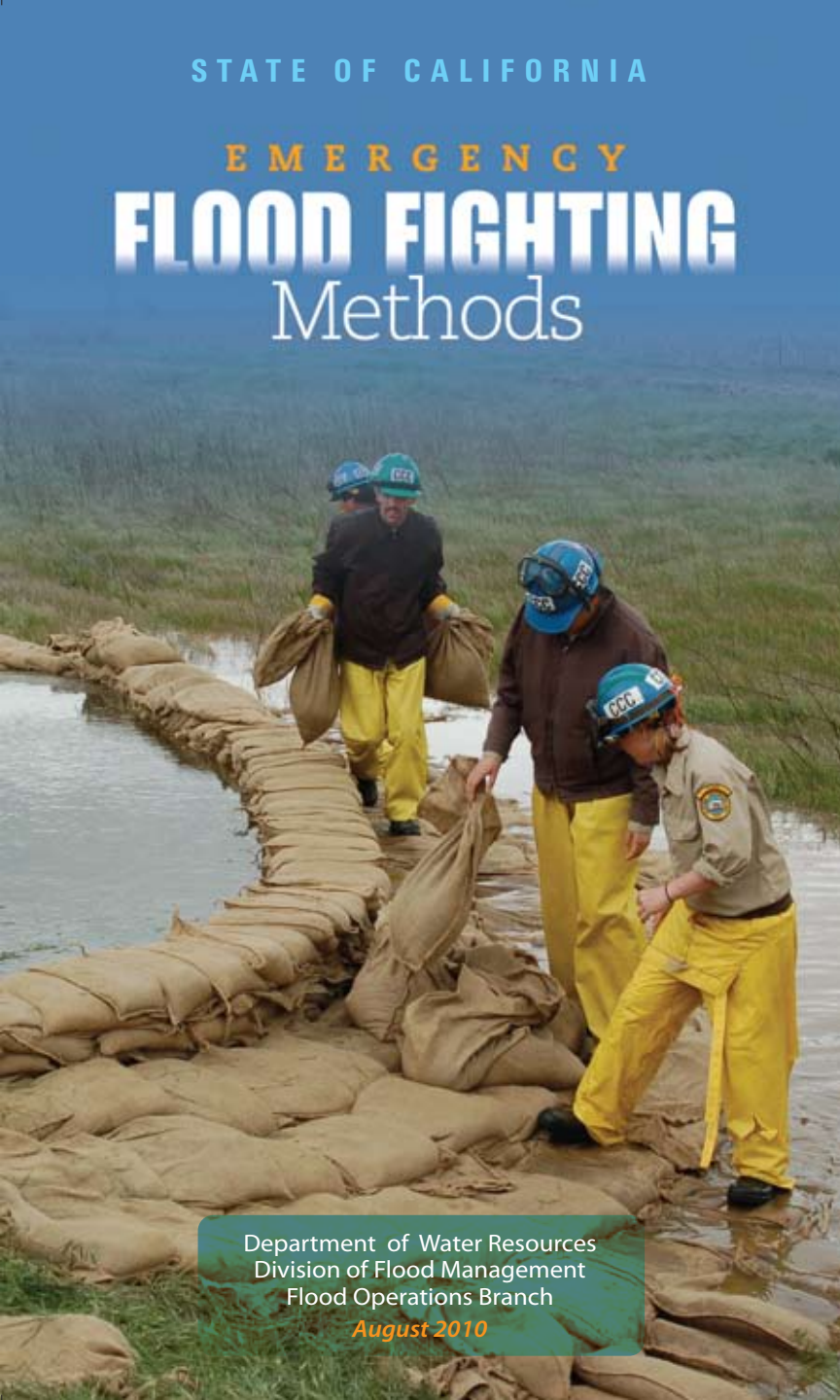

Department of Water Resources
Division of Flood Management
Flood Operations Branch

August 2010

STATE OF CALIFORNIA
CALIFORNIA NATURAL RESOURCES AGENCY
DEPARTMENT OF WATER RESOURCES

FLOOD FIGHTING
Methods

Division of Flood Management
Flood Operations Branch

August 2010

Prepared by

Rick Burnett

Flood Fight Specialist

Water Resources Engineering Associate

with assistance from

Elizabeth Bryson

Water Resources Engineer

Xiao Li

Graphic Designer

Table of Contents

2 *Foreword*

3 *Levee and Embankment Threats*

3 *Patrolling*

5 *Filling Sandbags*

7 *Passing Sandbags*

8 *Sandbag Construction*

9 *Control of Overtopping (Sack Topping, Temporary Levee)*

12 *Control of Boils*

16 *Wavewash Protection*

22 *Raincoat Method*

23 *Emergency Spillway*

24 *Structure Protection / Diversions*

28 *Water / Storm Drain Protection*

29 *Flood Fight Safety*

33 *Flood Fighting Terminology*

36 *Reference Guide*

37 *Flood Fight Material/Equipment List*

38 *Levee Profile*

Foreword

The California Department of Water Resources (DWR), Division of Flood Management has been tasked to prevent, reduce, and mitigate the risk of damages associated with flooding. For over fifty years DWR has been the lead State agency responsible for responding to this costly natural disaster. Our mission is to prevent loss of life and damage to property and infrastructure.

Working together State, federal, and local agencies manage California's Flood Control System which consists of reservoirs, levees, weirs, bypasses, and retention basins.

This statewide system is managed with support from technologies such as weather and water forecasting, coordination of reservoir releases and a network of rain and stream gauges and snow pack monitoring. The information gathered is extremely important to emergency responders and the public.

The 'Flood Fighting Methods' outlined in this booklet have proven effective during many years of use by DWR, United States Army Corps of Engineers, and local agencies on flood-related emergencies. This handbook is published by the DWR Flood Operations Branch and is designed to be used with the Flood Fighting Methods class.

Levee and Embankment Threats

The main causes of levee failure or flood related problems due to high water are:

- Seepage through or under the levee heavy enough to cause a “boil”.
- Erosion of the levee or embankment due to swift moving water or wave action.
- Overtopping resulting from water-surface elevations higher than the levee or embankment.

Patrolling

The best defense against flood related issues and/or levee failure is to identify problems early and repair them immediately. Biannual levee inspections and effective high water patrolling make this possible. The following suggestions will help in organizing patrol teams for this work.

- Operate under the SEMS / ICS system and report to the appropriate section chief.
- Provide a sufficient number of workers for two 12 hour shifts.
- Provide each worker with a copy of this ‘Flood Fighting Methods’ handbook.
- Assign two people to each mobile patrol.
- Assign each mobile patrol vehicle an area no larger than can be inspected at least every 2 hours, with more frequent patrols as conditions warrant. Foot patrols may offer a more thorough inspection.

- Furnish each mobile patrol vehicle with radio/cell phone or other communication equipment, lights for night patrol, and the following materials: Laths, survey ribbon, permanent marker, pad and pencil, flashlight with extra batteries, 2 shovels, 1 sledge hammer, approximately 50 sandbags (empty), 1 roll of plastic sheeting (visquine), 1 box twine, 100 buttons, 25 wooden stakes, lifeline, personal floatation devices, blanket, First Aid kit, Directory of Flood Officials, and Flood Emergency Phone Card. (see Reference Guide on page 36)
- Identify potential problems: boils, seepage, erosion, cracks, sloughing etc.
- Instruct each patrol team on the correct filling and placement of sandbags. They should know what danger signs to watch for, and how to signal for help.
- Vehicles should remain on high ground in threatened areas. Always have escape routes and make them known.
- Instruct each leader to check with their team members frequently. Investigate all reported problems.
- Be aware of the locations of stockpiled sandbags and other tools and equipment at strategic locations.
- Be prepared to obtain more workers, tools, and equipment on short notice.
- Advise the officials of the district or agency responsible for emergency assistance in the area and if necessary, request their help, i.e. local emergency services office.
- Contact the nearest representative of the Department of Water Resources for technical advice and assistance.

Filling Sandbags

When filling sandbags you should work in pairs, with one person holding the bag while the other shovels in the fill material. The bag holder should find the most comfortable position while holding the bag open (see Figure 1 page 6). **The most common mistake made is overfilling bags**. The first shovel of fill should be placed on the lip of the bag to help hold the bag open. The shoveler should use rounded scoops of fill until the bag is approximately 1/3 full. While shoveling or holding, avoid extra movements (turning or twisting of the back) to prevent injury and reduce fatigue.

Filling Sandbags

Figure 1: Proper sandbag filling

Passing Sandbags

Passing Sandbags

To avoid injuries and maximize productivity emergency responders can be organized into a sandbag passing line or 'chain'.

The line is formed by standing facing the next person and slightly off set. The bags are passed down the center of the chain.

Passing Sandbags

Sandbag Construction

The use of sandbags is a simple but effective method of preventing or reducing damage from floodwater and debris. (see Figure 2) Suggestions for constructing sandbag structures are:

1. Close-weave burlap bags 18” x 30” are recommended for all sandbag construction when available.

2. Fold the empty top of the bag at a 45-degree angle to keep sand from leaching out.

3. Place each bag over the folded top of the preceding bag and stomp into place.

4. Stagger the second layer of bags over the seams of the preceding layer.

5. Stomp all bags to form a tight seal.

6. The last sandbag in a line is referred to as a Key Sack. The empty top of this bag is folded under and stomped into place.

Sandbag Wall Construction

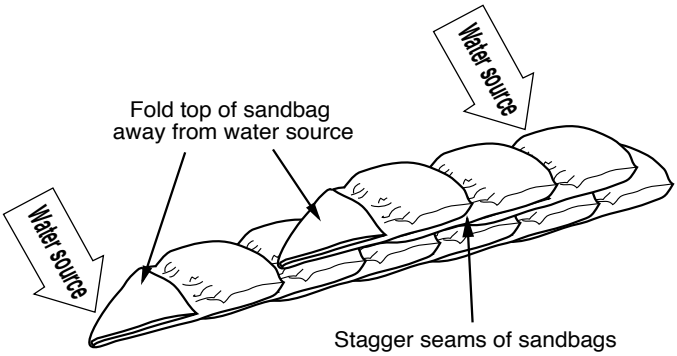

Figure 2: Fill sandbags 1/3 full, fold top of sandbag away from water source and stagger seams of sandbags.

Control of Overtopping

If any levee reach or stream bank is lower than the anticipated high water elevation, an emergency topping should be constructed to raise the grade above the forecast flood height. A sack topping may be required at road or stock crossings, low levee sections, or railroad crossings. The following sections discuss various methods for increasing levee and bank elevations.

Sack Topping

The most common form of flood control work is the use of sandbags for construction of temporary walls. The use of sandbag walls to increase the height of a levee section is called “sack topping” (see Figure 3). The sacks are laid “as stretcher rows,” or along the levee.

Alternate layers can be crossed if additional strength is needed. The sacks should overlap at least one-third and stomped firmly into place. When properly placed and compacted, one sack layer will provide about 3 to 4 inches of topping.

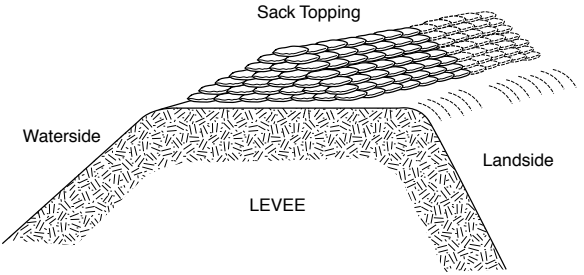

Figure 3: Sack topping on a levee

Sack Topping

Temporary Levee

This method is used to raise low areas during high water periods to prevent overtopping of levees, stream and riverbanks, small earthen dams, roadways, etc. To raise low areas, unfold a 20'x100'x10 mil roll of plastic sheeting and lay out flat on area to be raised (see Figure 4). Place fill material on plastic. Fold plastic over material, lay a single row of sandbags on the backside lip of plastic and on all seams. Fill material can be placed using bottom dump or dump bed trucks, front-end loader or manually.

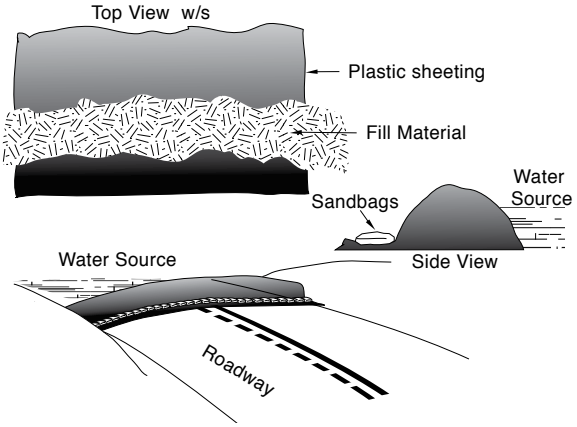

Figure 4: Temporary levee

Temporary Levee

Lumber and Sack Topping

Wooden panels are used on the waterside shoulder and reinforced on the opposite side with sandbags. The method is used to raise low reaches during high water and divert debris flows (see Figure 5). Stakes 2”x 4”x 6’ should be driven on the waterside shoulder 6 feet apart. A shallow trench is and lined with empty sandbags to provide a seal. Pre-constructed wooden panels are placed in the trench

and nailed to the landside of the stakes. This wall should then be backed with enough sandbags to support the panels against the expected high water. In some cases, it may be practical to back the panels with compacted earth in lieu of sandbags. Attach 2”x 4”x 10’ lumber kickers to the stakes that support the panels, and drive 2’ stakes into the levee crown. Use at least two nails at each joint to provide rigid construction.

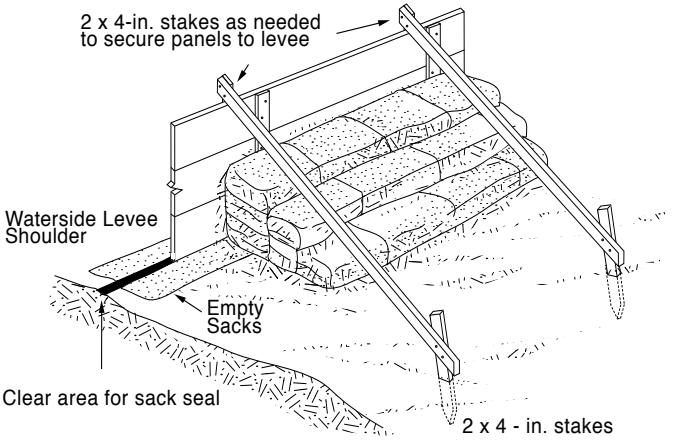

Figure 5: Lumber and sack topping

<u>Control of Boils</u> *(Away from Levee)*

A boil is a condition that occurs when water is “piped” through or under a levee and resurfaces on the landside. These weak points are generally caused by burrowing rodents or decomposed tree roots. High water pressure can begin to erode the interior of the levee and weaken the structure. Levee material will deposit around the exit point as the water discharges on the landside. If the boil is determined to be **“carrying material”** then corrective action is required to control the situation.

If left unattended the material that makes up the levee can be eroded at an accelerated pace, causing subsidence and overtopping of the levee. This could result in a levee break.

The common method for controlling a boil is to create a watertight sack ring around it. The sandbag structure should be high enough to slow the velocity of the water and prevent further discharge of material from the boil (see Figures 6 & 7). The flow of water should never be stopped completely, since this may cause the boil to “break out” in an area near the existing sack ring. A spillway must be constructed to direct water away from all boil sites.

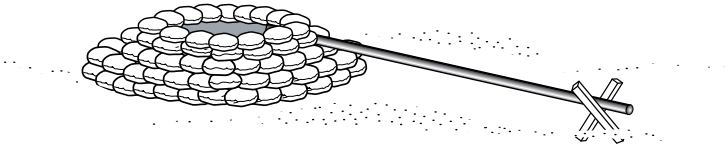

Figure 6: Boil sack ring

Bottom width should be at least 11/2 times the height. Do not sack boils that are not carrying material, but continue to monitor. Boils can begin to carry material after first located.

Boil Sack Ring

The sack ring should be large enough to encompass the area immediately surrounding the discharge point (3 to 4 feet diameter). If several boils carrying material are found, a single large sack ring may be constructed around the entire “nest” of boils.

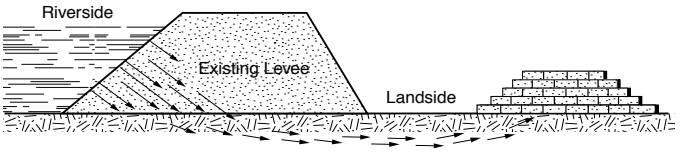

Figure 7: Flow of water through a levee

Control of Boils *(On Levee Slope)*

If the boil is close to or on the levee slope, a U-shaped sack ring may be built around the boil and keyed into the slope. Construction of this method can be difficult and requires substantial shoring up of the U-shaped sack ring structure. A spillway must be constructed to direct water away from all boil sites (see Figure 8).

NEVER completely stop the flow from a boil. This may cause the boil to "break out" in an adjacent area. ALWAYS control the boil to a point where it ceases to carry material and the water runs clear.

"U" shape Sack Ring

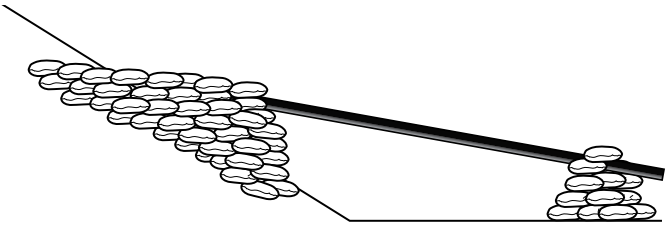

Figure 8: Spillways can be constructed by nailing two 2”x 6” boards together to form a V notch; PVC pipe; two parallel sandbag rows; visquine, etc.

Waterside Boil Inlet Detection

Water running through a levee and carrying material can sometimes be stopped on the waterside, thus eliminating the building of sack rings on the landside (see Figure 9). A six foot long section of 2” diameter metal pipe secured to a 5’x 6’ foot piece of plastic or canvas can be rolled over the inlet hole on the waterside. Drive 1”x 3”x 2’ stakes into the shoulder of the levee. Suspend half-filled sandbags on top of rolled-out material with twine and tie off to stakes. It can be difficult to locate the waterside inlet of boils. Sometimes a swirl is observed at the water’s edge.

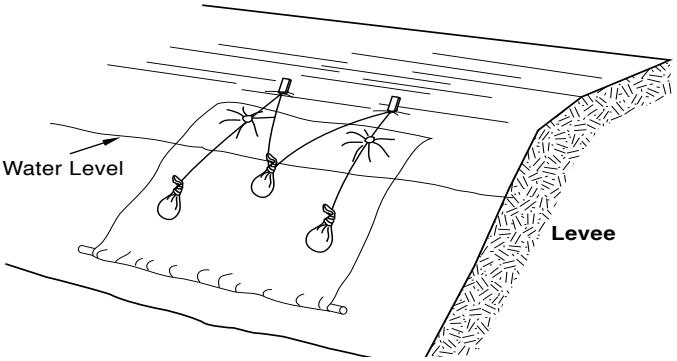

Figure 9: Waterside boil protection

Wavewash Protection

All levees adjacent to wide stretches of water should be watched during periods of strong wind to detect the early stages of wavewash erosion. If the slope is well sodded, short periods of high wind should cause little damage. However during sustained periods of strong wind and high water, experienced personnel should observe and monitor the effected areas.

Envelope Method

When used correctly, plastic sheeting is useful for wavewash protection. Visquine should be purchased in 10 mil rolls, 20 feet wide by 100 feet long. 1”x3”x2’ wooden stakes are driven into the ground just above the levee shoulder on the side you wish to protect. Place the stakes 4 feet apart and stagger vertically by 1 foot as shown in Figure 10.

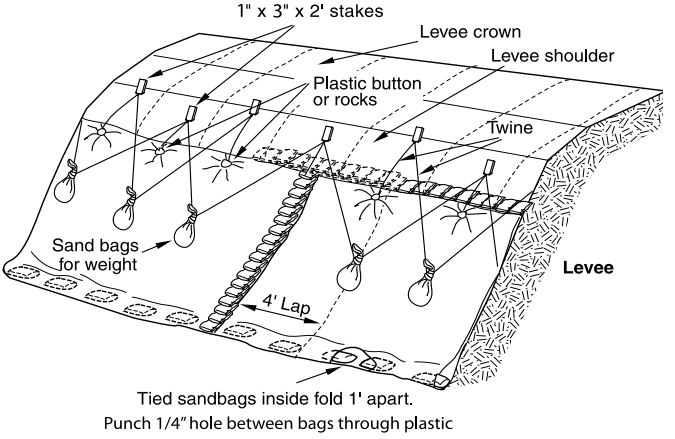

Figure 10: Wavewash Protection

Wavewash Protection

Avoid driving stakes in a straight line; this can to cause cracking and sloughing of the slope. To provide added strength and leverage, drive stakes at a slight angle away from the water source with the wide (3”) side facing the water. Be sure the stakes are well into the ground and are secure.

When rolling out the plastic sheeting it is helpful to use a shovel or similar long-handled tool. Eight to ten people should assist in shaking out the folds of the envelope. Be sure that both layers are held while the envelope is shaken out. Hold on tight! Use caution in strong winds. If the wind catches the plastic it could billow out and pull you along with it.

While flood workers hold the plastic securely, toss tied sandbags into the envelope. The tied sandbags (see Figure 12, page 20) are thrown into the bottom of the envelope with a one-foot gap between bags. The tied bags provide weight to hold the plastic against the levee slope.

A tie-down button or small stone (preferably round) is secured through both layers of visquine. If a stone is used, tie a slip knot and double half-hitch to secure it. Fasten buttons to the visquine and tie off to the stakes using a minimum 250 lb. tensile strength twine with these points in mind: (See Figure 11.)

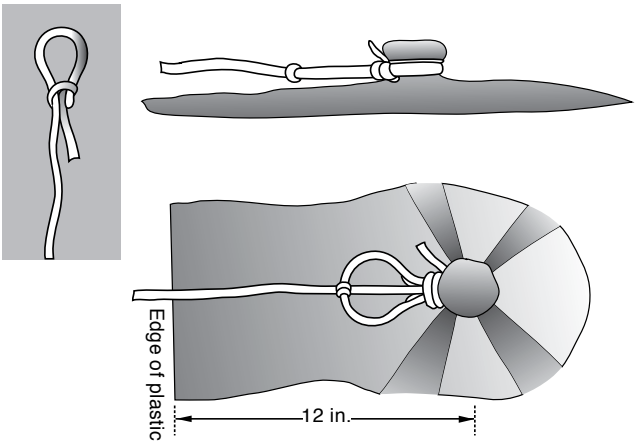

Figure 11: Plastic Tie-Down Buttons

1. Fasten button at least 1 foot from the edge of the plastic.

2. Fasten button to both layers of plastic.

3. Fasten button directly below stakes (one button per stake).

4. Tie twine low on stake for strength and to reduce tripping hazard.

Plastic sheeting is secured using tie down buttons. To attach plastic buttons to the plastic, tie a slipknot on the end of the twine; slip loop over button and plastic and draw tight. Tie two half-hitch knots around the throat of main body. Extend twine to large end of main body, tie a half-hitch knot around the end, and secure twine to stake (see Figure 11).

With the plastic secured to the stakes, punch a small hole between each tied bag in the envelope, (a pencil works well). These holes release water trapped in the envelope. DO NOT use a knife because a slice or slit will tear and

Button Tying

spread in the plastic. If further slope protection is necessary insert an additional envelope into the existing wavewash protection overlapping at least four feet. To secure the overlap to the stakes attach the two top layers with one button and the two bottom layers with another. The buttons line up with the stakes that are four feet apart. There should be four buttons securing the two envelopes.

Using a continuous piece of twine, hang tied bags from stakes in a zigzag fashion as shown in Figure 10. Tie a double half-hitch knot below the knot in each sandbag. ***Place each bag so that it hangs at the middle of the plastic directly below the stake between the two stakes from which it is suspended.*** Attach twine to every other stake with a double half-hitch. Add a second row of tied bags suspended from the stakes previously skipped. These bags will keep the plastic lying flat against the levee slope in windy conditions. If the upper portion of the slope needs protection, use an additional envelope. Be sure to place the upper layer over the lower layer by 2 to 3 feet. Finally place sandbags along all seams to prevent wind and water from entering the envelope. To prevent slippage, make sure the sandbags forming the top seam cap are half on the plastic and half on the levee as shown in Figure 10. If the levee slope is too steep,

some of the bags on the seam may be tied off with twine to the stake above the envelope for support.

Remember, wind is your worst enemy. When using plastic sheeting, be sure all seams are secured with sandbags, and make needed repairs to the envelope as soon as possible.

Tying Sandbags

Most sandbags are used with the open end folded. In some cases sandbags will have to be tied. Fill the bag 1/4 to 1/3 full of material. See Figures 12A–12D for instructions.

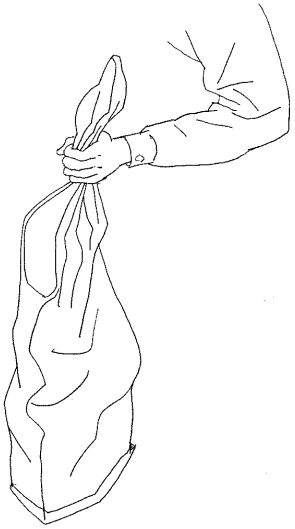

Figure 12A: Sandbag filled 1/4 to 1/3 full

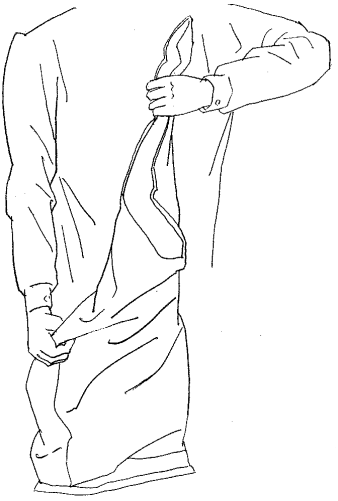

Figure 12B: Grasp bag at top corner and spin

Figure 12C: The long tail should be twisted tightly and look like a piece of rope.

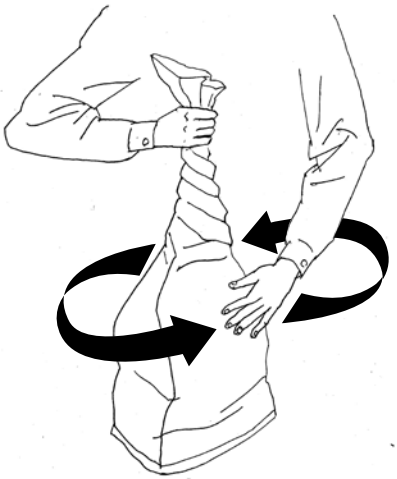

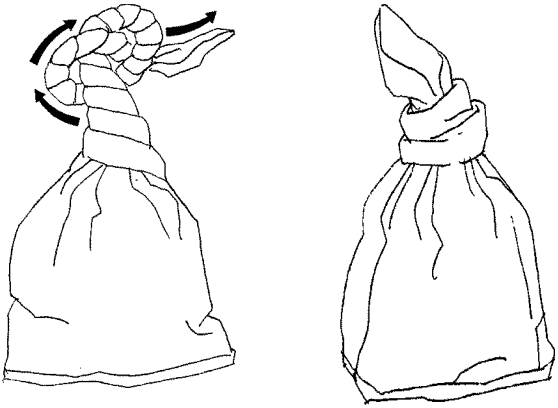

Figure 12D: Tie an overhand knot (pretzel knot) as low as possible on the bag.

Raincoat Method

The raincoat method is used to prevent further saturation of levee or hillside slopes. Plastic sheeting is laid out flat on the slope, sandbags are placed around the perimeter with additional bags placed randomly for weight. If the slope is steep, wooden stakes can be driven into the ground just above the area to be protected. The stakes are 4 feet apart with a 1-foot stagger. The plastic is secured to the stakes with tie-down buttons or small round rocks (see Figure 13).

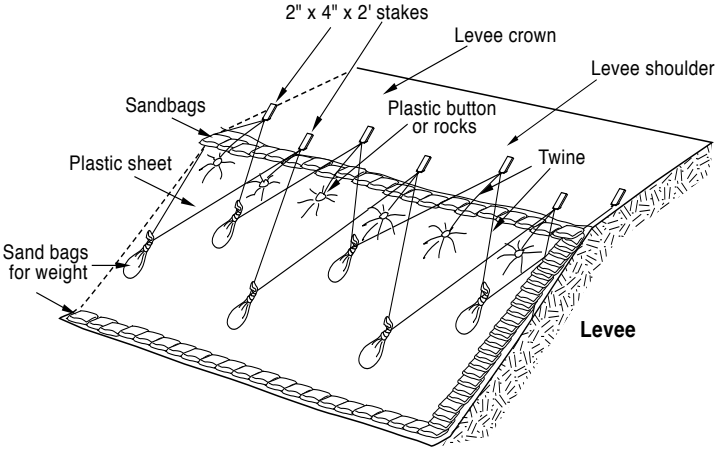

Figure 13: Raincoat method

Use a crisscross method of placing the sandbags (Figure 13) on the plastic. Place a solid row of sandbags on all edges of the plastic (half on the ground, half on the plastic).

Emergency Spillway

To prevent damage to the levee slope due to overtopping, an emergency spillway can be constructed.

Place plastic sheeting over area to be used for spillway. Line all sides with at least a single row of sandbags. Use additional tied sandbags on plastic for weight if needed.

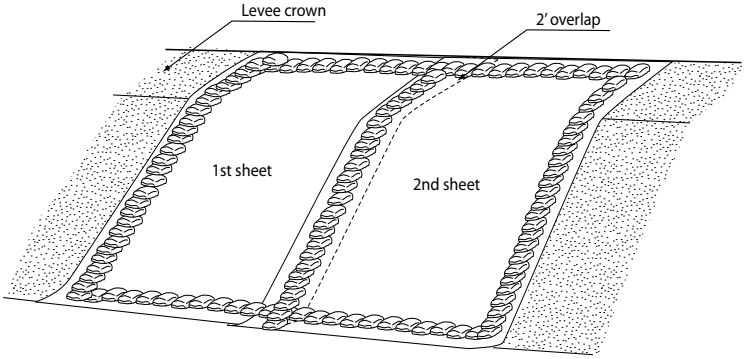

Figure 14: Emergency spillway using plastic sheeting and sandbags

Emergency Spillway

Structure Protection/Diversions

The main causes of damage to structures, homes, and property during heavy rains or flood flows are:

1. Flood water from overwhelmed storm drains and urban diversions, particularly on sloping streets.

2. Flood flows onto property through driveway openings and low spots in curbs.

3. Debris flow from hillsides that have been cleared of vegetation by fire or real estate development.

The flood fighting methods described in the following sections have proved effective in combating floodwaters and debris flows.

Diverting Water or Debris Flows Away from Structures

Homes and structures can be protected from floodwater or debris flows by redirecting the flow as shown in Figure 15. Sandbag barriers must be long enough to divert the flows away from all structures. Barriers constructed of sandbags or lumber can also be used to channel mud and debris away from property improvements.

Structure Protection

Structure Protection

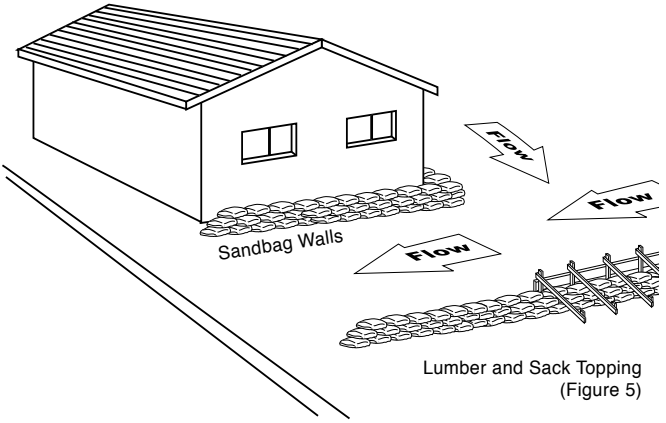

Figure 15: To divert mud, debris, and water, use sandbag walls or lumber and sack topping

Structure Protection

The following method is used for protection of buildings and other structures along lake shores and in similar situations where water is rising with little or no current.

Lay plastic sheeting on the ground and up the building walls to a point at least 1 foot above the predicted water elevation, and far enough out on the ground to form a half pyramid of sandbags (see Figure 16). Secure plywood over doors and vents. Overlap plastic sheeting and sandbags at corners of buildings.

Home Protection

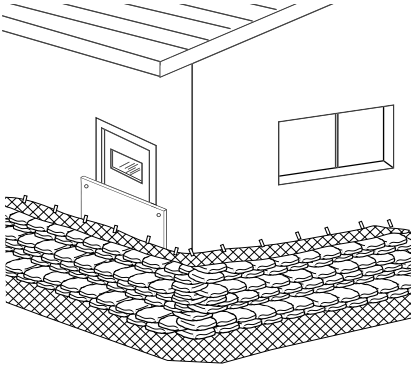

Figure 16: Structure protection

Wet Flood Proofing Requirements for Structures Located Within Special Flood Hazard Areas

National Flood Insurance Program regulations require that buildings on extended wall foundations or that have enclosures below the base flood elevation must have foundation or enclosure wall openings. These openings prevent the foundation or enclosure walls from weakening or collapsing under pressure from hydrostatic forces during a 100 year flood event. The openings allow flood waters to reach equal levels on both sides of the foundation or enclosure wall and minimize the potential for damage from hydrostatic pressure.

THESE OPENINGS MUST NOT BE BLOCKED IF THE BUILDING IS LOCATED WITHIN A SPECIAL FLOOD HAZARD AREA.

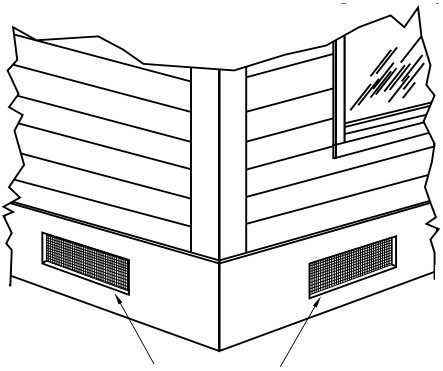

Foundation or wall openings must be kept open within special flood hazard areas

Figure 17: Foundation and wall openings in structures

For details refer to FEMA Technical Bulletins TB1-93 and TB-7.
These bulletins may be obtained from the FEMA web site at:
http://www.fema.gov
For additional information contact DWR Floodplain Management at
(916) 574-1475

Water / Storm Drain Protection

Water or sewer systems can be protected by placing corrugated metal pipe (CMP) over the utility hole (see Figure 18). Lay plastic sheeting up the walls of the CMP and place sandbags in the form of a half pyramid around the CMP to seal it to the pavement. This method will prevent mud and debris from entering the system and also act as a surge chamber.

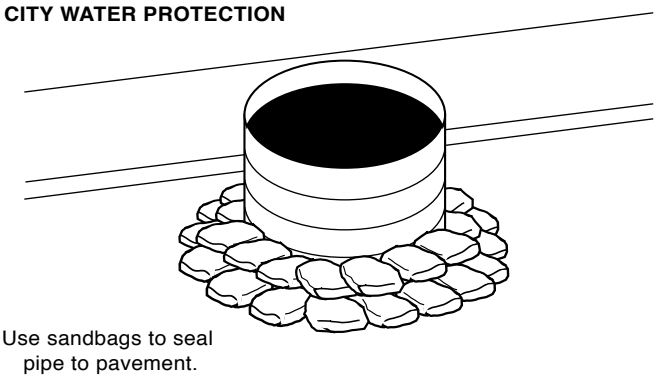

Using corregated metal pipe (CMP) over utility hole to isolate sewer line or prevent contamination of water system.

Figure 18: Water / storm drain protection

Flood Fight Safety

Numerous potential hazards exist during flood events. These hazards are manageable if identification and communication occur on an ongoing basis. Personal safety requires a conscious effort that every flood fighter must consider in their various duties and activities.

- ***Changing Weather Patterns:*** This occurrence can affect existing conditions and create more serious situations. Always know the forecast and how it affects vulnerable areas, workers and the public.

- ***Changing Water Patterns:*** The rise and fall of water can occur gradually or very quickly. Knowledge of high water and how it relates to levees, communities, and workers is essential. Continuous monitoring and communication of water level influences (i.e. reservoir releases, tides, and drainage inflow) are very important. Always know your area and the flood history around you.

- ***Swift Water:*** High velocities of water are common during flooding events. Extreme caution should be used when anyone is exposed to high water. Workers should have flotation devices, throw ropes, and lifelines in the immediate area. Swift water rescue teams may be available. Use common sense and sound judgement around swift water. Know your resources and how to activate them prior to the event.

- ***Temperature Related Illness:*** During a flood fight, weather patterns can change constantly. Changes in temperature present the potential for hypothermia and heat exhaustion/stroke. Flood fighters should know the signs of distress for these types of illnesses and how to treat them. During cold, wet weather it is recommended that workers layer clothing to stay warm and dry. A dry

blanket and warm clear fluids should be on the work site for emergency use. In warm, hot weather lightweight clothing is recommended. If skin is exposed, a sun block agent may need to be applied. Plenty of drinking water should be on site and consumed regularly. Headgear is recommended in both hot and cold situations.

- ***Insect/Animal Exposure:*** Flooded areas force a variety of animals to evacuate to high ground. Workers in these areas should be aware of these animals and not handle them. If animal removal is needed, contact a local professional. Stinging and biting insects are prominent in certain flood-prone areas. Chemical repellents can be useful as a deterrent. A complete first aid kit should be on site.

- ***Vegetation:*** Noxious plants such as star thistle, stinging nettle, and poison oak are commonly found along rivers, streams, and levees. Avoid direct contact with this type of vegetation to prevent itching and rash. Consult medical personnel if symptoms persist.

- ***Sandpile Safety:*** When shovels are used for filling bags a safe distance for workers is essential. Sandbags and sand may contain contaminates. Have disinfectant available. Safety glasses or goggles are recommended for protection from blowing sand particles.

- ***Contamination:*** Flooded areas can potentially carry high levels of contaminants. Common contaminats include fuel, sewage, and pesticides. Local Haz-Mat teams should be contacted if needed. Always wear protective clothing to help limit contact with water. Carry antibiotic hand soap and wash thoroughly after working around floodwater.

- ***Exhaustion:*** Stress combined with long, physically demanding hours can have an adverse effect on the flood

worker. It is very important to recognize exhaustion or sleep deprivation and treat them immediately. Operation of vehicles, machinery, or equipment should be avoided. A shift rotation of personnel will help eliminate fatigue factors.

- ***Body Mechanics:*** Proper body mechanics while working on floods is very important. The body is expected to work long, physical hours during the event. Each individual must make a conscious effort to use safe lifting and weight distribution techniques. Watch your footing; surfaces can be slippery and cluttered with tripping hazards.

- ***Construction Equipment:*** There are times when equipment and people will occupy the same work area. Workers should wear safety vests and hard hats and be aware of their surroundings. Safety warning devices (i.e. backup alarms and lights) should be in-tact and working on all equipment. Communication and alertness are vital! All operators must be certified for their equipment.

- ***Boat Travel:*** Materials and/or personnel will sometimes need to be transported to work sites by boat. Operators of the watercraft must be certified. Flotation devices must be available for every passenger. Extreme care should be taken while loading and off loading.

- ***Patrolling:*** Patrolling is the key to effective flood fighting. Patrols will identify, initiate control, and monitor trouble spots in affected areas. Vehicle patrols should travel in two person teams with dependable communication devices. Lifelines, flotation devices, and a blanket should be in the vehicle for possible water-related accidents. Foot patrols should also have the same considerations. Extreme caution should be exercised when travelling saturated, cracking, or sloughing areas.

- ***Vehicle Placement:*** Vehicles in work areas along the levee should remain parked on high ground. This is usually the crown roadway. Vehicles should also be parked facing their access point. An escape plan should be communicated to all flood workers.

- ***Structure Considerations:*** When working around structures, be aware of downed power lines, natural gas or propane leaks, and unstable structure supports. Communicate with the structure owner if possible.

- ***Safety Gear:*** Rain gear, warm clothing, handheld lights, gloves, goggles, hardhat, boots, first aid kit, ropes, personal flotation devices (PFD), hip waders.

Flood Fighting Terminology

Boil Also known as 'Sand Boil', is caused by water flowing through or under a levee, possibly carrying eroded levee material, and surfacing on the land side of the levee.

Button A plastic tie down device used with plastic sheeting.

Emergency Spillway Plastic sheeting and sandbags used to allow water to flow over a levee, protecting it from erosion. (Page 23)

Flood Fighting An effort made to prevent or mitigate the effects of flood waters.

Home Protection Plastic sheeting and sandbags placed around individual homes to protect from low current flood waters. (Page 26)

Lath Long, narrow wooden stakes (4 feet long by 1 ½ inch wide) used to mark problem areas during high water patrolling. A brief description of the problem along with the date, time, and patroller's initials are written on the lath with a permanent ink marker. Brightly colored survey ribbon is attached to the lath for easy identification.

Levee An earthen structure that parallels a river or stream designed to prevent high water flows from inundating urban and/or agricultural land.

Levee Break A point in the levee system that has failed to perform its designed function, has eroded away and is allowing water to inundate land.

Levee Breach The same as Levee Break but can sometimes describe a section of levee that has been intentionally broken. If intentional, also known as a relief cut.

Lumber and Sack Topping Wooden panels and sandbags used to prevent overtopping and to divert water, mud, and debris flows. (Page 11)

Overtopping When water has risen higher than the banks of a waterway or the top of a levee.

Plastic Sheeting Made of polyethylene, these 100'x20'x10 millimeter rolls are sometimes referred to as visquine and are used for erosion control.

Rain Coat A single layer of plastic sheeting and sandbags used to protect slopes from further rain saturation. (Page 22)

Relief Cut Intentionally-removed section of levee to relieve hydrologic pressure upstream and downstream of the levee section.

Sack Ring Multiple sandbag rings used to encircle a boil, slow the flow of water, and stop the erosion of levee material. (Page 13)

Sack Topping A sandbag wall designed to prevent overtopping. (Page 9)

Sandbag	An 18”x30” bag (burlap or plastic) filled with sand or other appropriate material intended for use as a temporary flood fighting measure.
Sloughing	Soil movement or slides often caused by over-saturated levee or hillside slopes. Can also be referred to as ‘mud slides’.
Structure Protection	Sandbags, wooden panels, or other materials used to divert water, mud, and debris flows away from buildings, homes, and other structures. (Page 24)
Temporary Levee	Use of plastic sheeting, fill material and sandbags to raise a low area on a levee or embankment. (Page 10)
Twine	250lb tensile strength polypropylene tying twine.
‘U’ Shaped Sack Ring	A sandbag structure used on levee slopes to control boils. (Page 14)
Wooden Panels	Wooden planks or plywood sheets used in conjunction with other flood fighting materials to prevent overtopping of levees or embankments and divert water.
Wavewash	Wind-generated waves breaking against a levee or embankment and possibly causing erosion.
Wavewash Protection	Plastic sheeting, sandbags, twine, stakes, and buttons used to prevent erosion of levee slopes and embankments. (Page 16)

Reference Guide:

DWR Division of Flood Management
www.water.ca.gov/floodmgmt

California Data Exchange Center
CDEC
www.cdec.water.ca.gov

California Emergency Management Agency
CalEMA
www.calema.ca.gov

National Weather Service
www.weather.gov

To request a copy of the Directory of Flood Officials or Flood Emergency Phone Card, contact the DWR Flood Operations Center at (916) 574-2619

Flood Fight Material/Equipment List

Fill/Repair material (Sand, Rock, Road Base)
Sandbags (18” width x 30” length 10 oz.)
Plastic Sheeting (100’x20’x10 millimeter rolls)
Wooden Stakes (1”x3”x24”)
Bailing Twine (250lb tensile strength)
Tie Down Buttons
Geotextile Fabric (20’x100’ rolls)

Patrolling

Patrol Vehicle (4Wheel Drive)
Communication Devices (Radio, Cell Phone, Laptop Computer (e-mail)
Global Positioning Satellite Handheld Device (GPS)
Digital Camera
Lighting (Flash Light, Flood Light)
Batteries
Lath (Bundle of 50)
Survey Ribbon (Bright Colors)
Permanent Ink Markers
Patrol Log (Writing Pad and Pencil)
Measuring Tape (100’)

Tools

Shovels, Long Handle (#2 Mud Shovel)
Sledge Hammer (10lb)
Multi Purpose Lineman Pliers
Pulaski
McLeod
Loppers

Safety

Rain Gear
Rubber Boots
Hard Hat
Safety Glasses
Gloves
Boots
Personal Flotation Device (PFD)
Personal Safety Light
Warm Clothing
First Aid Kit

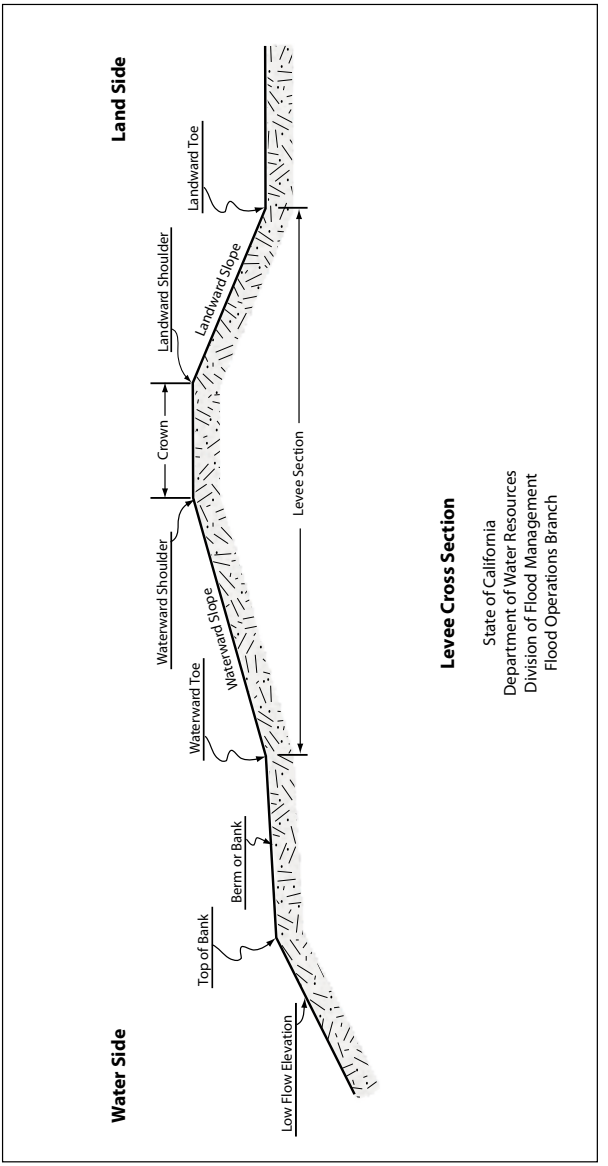
Water Side
Land Side
Low Flow Elevation
Top of Bank
Berm or Bank
Waterward Toe
Waterward Slope
Waterward Shoulder
Crown
Landward Shoulder
Landward Slope
Landward Toe
Levee Section
Levee Cross Section
State of California
Department of Water Resources
Division of Flood Management
Flood Operations Branch

For all flood emergencies, questions, or for additional information, please contact :

State-Federal Flood Operations Center
(916) 574-2619
flood_center@water.ca.gov

For training information, contact:

Rick Burnett
Flood Fight Specialist
(916) 574-1203
rburnett@water.ca.gov
www. floodfightmethods.org

floodER
Department of Water Resources
Flood Emergency Response Program

FloodSAFE
CALIFORNIA
DEPARTMENT OF WATER RESOURCES

STATE OF CALIFORNIA — THE RESOURCES AGENCY
DEPARTMENT OF WATER RESOURCES
DIVISION OF FLOOD MANAGEMENT

SUPERINTENDENT'S GUIDE TO OPERATION & MAINTENANCE OF CALIFORNIA'S FLOOD CONTROL PROJECTS

Gordon K. Van Vleck
Secretary for Resources
The Resources Agency

George Deukmejian
Governor
State of California

David N. Kennedy
Director
Department of Water Resources

INTRODUCTION

The Guide has been prepared to help supervisory personnel of reclamation districts, levee districts, flood control districts, and other local agencies with flood control responsibilities in acting as superintendents of flood control projects in California. The Guide is also intended for use by supervisory personnel of the Department of Water Resources who have similar responsibilities.

The Guide explains the duties and responsibilities of those who supervise the maintenance and operation of flood control facilities in their areas of jurisdiction. It also identifies the federal, State, and local regulations that superintendents are required to know and comply with. All personnel who supervise flood control workers should familiarize themselves with this information. It will help them understand the importance of properly operating and maintaining the projects that millions of Californians rely on for protection of their lives and property.

At the time the Guide was released, the U.S. Corps of Engineers was conducting experiments and pilot studies to determine how well certain types of vegetation prevented erosion from occurring on levee slopes. When the study is completed, the results may differ from the recommendations outlined in this document, which are based on The Reclamation Board's Guide for Vegetation on Project Levees. In the interim, the Board's program will apply.

The Guide has been prepared specifically for use in the Central Valley. This is because the flood control supervision, maintenance, and inspection authority of the Department of Water Resources, under statute or in cooperation with The Reclamation Board, is limited to the drainage of the Sacramento and San Joaquin rivers. However, this Guide should be applicable and useful to all federal flood control projects in the State. Federal projects both inside and outside the Central Valley are authorized in the Water Resources Law of 1945 (as amended) and are listed in Section 12639 and following sections of the Water Code.

The Guide is arranged so that it can be readily revised and updated as needed. Comments regarding the contents can be sent to:

Department of Water Resources
Flood Operations Center
1416 - 9th Street
Sacramento CA 94236-0001

STATE OF CALIFORNIA
George Deukmejian, Governor

THE RESOURCES AGENCY
Gordon K. Van Vleck, Secretary for Resources

DEPARTMENT OF WATER RESOURCES
David N. Kennedy, Director

John P. Caffrey
Deputy Director

Robert G. Potter
Deputy Director

Robert E. Whiting
Deputy Director

Salle S. Jantz
Assistant Director

Susan Weber
Chief Counsel

DIVISION OF FLOOD MANAGEMENT
G. Donald Meixner, Chief

This publication was prepared under the direction of

Don Neudeck, Chief, Flood Operations Branch

by

Billy E. Clark, Deputy Chief, Flood Operations (Retired)

assisted by

Wendy S. Fitzgerald . . . . . Levee Management Specialist
Gayle Dowd . . . . . Water Resources Technician II
Travis Latham . . . . . Research Writer

ACKNOWLEDGMENTS

The Superintendent's Guide has been reviewed by the the U.S. Army Corps of Engineers, Sacramento District; The Reclamation Board; and the Governor's Office of Emergency Services. We appreciate the assistance they gave during preparation of this document.

CONTENTS

SECTION 1. RESPONSIBILITIES AND DUTIES OF THE SUPERINTENDENT

Superintendents, Local Agencies 1.10
Superintendents, Department of Water Resources 1.20
The Superintendent's Areas of Responsibility 1.30
Local Agencies 1.31
Basic Responsibilities of All Superintendents 1.32
Maintenance Policies 1.40
Authority to Carry Out Duties 1.50
U.S. Army Corps of Engineers 1.51
The Reclamation Board 1.52
The California Water Code 1.53
Responsibilities of the Department of Water Resources 1.60
Maintenance Areas 1.70
Local Agencies 1.80

SECTION 2. SAFETY

Permit Requirements 2.10
Equipment Transportation 2.11
Traffic Control 2.12
Restoration and Repair 2.13
Channel Clearing 2.14
Burning 2.15
Rodent and Vegetation Control 2.16
Worker Safety 2.20
Safety Training 2.30
Safety Meetings 2.31
Protective Gear 2.32
Protective Gear, Pesticide Use 2.33
Foul Weather Gear 2.34
Safe Storage and Handling of Pesticides 2.40
Safe Working Conditions 2.41
Emergency Medical Care 2.42
Restricted Materials 2.43
Storage of Pesticides 2.44
Transportation of Pesticides 2.45
Rinsing and Disposal of Used Pesticide Containers 2.46
Pesticide Service Containers 2.47
Pesticide Spills 2.48

SECTION 3. VEGETATION MANAGEMENT

Burning 3.10
Mowing 3.20
Spraying 3.30
Broadleaf Selective 3.31
Bare Ground 3.32
Spot Treatment 3.33
Brush and Vines 3.34

CONTENTS (Continued)

SECTION 4. PROJECT MAINTENANCE OPERATIONS

Crown Roadways 4.10
Vegetation Management on Crown Roadways 4.11
Fireguarding 4.12
Levee Slopes and Rights of Way 4.20
Vegetation Management on Levee Slopes 4.21
Dragging 4.22
Channel Clearing 4.30
Drainage Facilities 4.40
Control Gates and Culverts 4.41
Minor Structures 4.50
Mile Markers 4.51
Gates, Barricades, and Signs 4.52
Mitigation Measures 4.53
Major Structures 4.60
Fixed Weirs 4.61
Control Weirs 4.62
Diversion Structures 4.63
Pumping Plants 4.64
Outfall Structures 4.65
Bridges and Roads 4.66
Drop Structures 4.67

SECTION 5. RODENT CONTROL

Ground Squirrel Control 5.10
Rodent Control Techniques 5.20
Fumigation 5.21
Bait Stations 5.22
Bait Broadcasting 5.23
Trapping 5.24
Other Problem Species 5.30

SECTION 6. EMERGENCY OPERATIONS

Basic Flood Fight Materials and Equipment 6.10
High-Water Patrolling 6.20
The Mobile Patrol Unit 6.21
Selecting a Sector Boss 6.22
Patrol Scheduling 6.23
Quick-Response Plan 6.231
Patrol Operations 6.24
Mobile Patrols 6.241
Walking Patrols 6.242
Reporting Trouble Spots 6.25
Flood Fight Check List 6.26

CONTENTS (Continued)

SECTION 6. EMERGENCY OPERATIONS (Continued)

Asking For Help 6.30
During a Flood Emergency 6.31
After a Flood Emergency 6.32
Public Law 84-99 ..... 6.321
Federal Emergency Management Agency (FEMA) 6.322

Form: "Request for PL 84-99 Emergency Rehabilitation Assistance on Federal Project Flood Control Works" .... Following Section 6

Figures

1 Standard Pipe Gate ..... All

2 Standard Pipe Gate - Details ..... figures

3 Standard Pipe Gate - Latch Post and Gate Stop Post ..... follow

4 Standard Pipe Gate - Sign Installation for Dead End Road and Sign Installation ..... Section 4

5 Standard Pipe Gate - Fabrication of Barricade and Sign; Installation of Barricade and Sign .....

6 Standard Pipe Gate - Signs in Use; Standard Levee Levee Mile Marker .....

SECTION 1

RESPONSIBILITIES AND DUTIES OF THE SUPERINTENDENT

Superintendents, Local Agencies 1.10

The superintendent of a reclamation district, protection district, drainage district, municipality, maintenance area, or other public agency within the limits of any federal flood control project in the Sacramento and San Joaquin River watersheds is responsible for maintaining and operating the project works lying within the boundaries or jurisdiction of such an agency. These activities must be performed in accordance with Sec. 208.10, Title 33, of the Code of Federal Regulations, approved by the Secretary of the Army on August 9, 1944.

Superintendents, Department of Water Resources 1.20

Personnel of the Department of Water Resources (DWR) who are designated as superintendents in charge of operations and maintenance of federal flood control projects are also required to meet the requirements of the Code of Federal Regulations.

The Superintendent's Areas of Responsibility 1.30

Local Agencies. Under the direction of a local agency's board of directors or board of trustees, local agency superintendents are responsible for maintaining and operating all portions of the projects within the Sacramento and San Joaquin valleys within the boundaries of their jurisdiction, except those works charged the Department of Water Resources under Water Code Sec. 8361 and the maintenance areas that are maintained by DWR, with local beneficiaries paying the costs (Sec. 12878). 1.31

The Department of Water Resources is responsible for maintaining, at State expense, certain channels of the Sacramento River Flood Control Project and Sacramento River Major and Minor Tributaries Project, the American River Flood Control Project, and the Middle Creek Project (Sec. 8361). This responsibility is defined as channel capacity maintenance. It does not include protection of the levees or private property from erosion or other damage. That work is the responsibility of the local levee maintenance agency or property owner.

Basic Responsibilities of All Superintendents

1. Assistant

   To appoint and train an assistant to act in the superintendent's absence.

2. Staff

   To maintain and develop a staff of trained personnel who can (a) safely and effectively operate and maintain flood control project structures and facilities and (b) assume responsibility during a flood crisis.

3. Supplies

   To keep on hand a reasonable supply of flood fight tools and materials for flood emergencies, and to have 24-hour access to sources of additional supplies.

4. Emergency Personnel

   To have readily available an up-to-date list of telephone numbers of State and local officials and personnel with special expertise in meeting flood emergencies.

5. Inspections

   To make periodic inspections of all project structures and facilities, including any notable changes in levee crown elevation (subsidence) to ensure these control works will provide the designed flood protection.

6. Budget

   To submit an annual budget that will provide funds adequate for maintenance of the district's flood control responsibilities. (Procedures for review and approval of local district budgets may vary from agency to agency.)

7. Safety

   To support and enforce safety rules and programs.

(Regulations on operation and maintenance of project facilities are stated in the U.S. Corps of Engineers' Standard Operation and Maintenance Manual and Supplements, Title 33, Chap. 2, Part 208, Flood Control Regulations. Special duties of the superintendent during flood emergencies are outlined in Section 6, "Emergency Operations," of this Guide.)

Maintenance Policies 1.40

All superintendents of flood control project maintenance units, whether they are employed by a local agency or the Department of Water Resources, are required to observe The Reclamation Board's policy to maintain and protect the environment in a manner that is consistent with the protection of lives and property from floods. The protection of wildlife mitigation areas, especially revegetation easements, is essential to environmental protection.

Superintendents are also required to promote good relations with the public by considering the value of property adjacent to project facilities. Superintendents are responsible for ensuring that certain maintenance and operation procedures such as burning, herbicide spraying, crown roadway maintenance, and bypass flooding do not inconvenience or endanger nearby landowners or endanger wildlife mitigation easements. Although not necessarily required, a courtesy visit or phone call to persons who might be affected by such work can do a great deal to promote favorable relationships between project maintenance personnel and property owners.

Authority to Carry Out Duties 1.50

Operation and maintenance of flood control projects in California are governed by two agencies, the U.S. Army Corps of Engineers and The Reclamation Board, as provided for under provisions of the California Water Code. The Corps of Engineers works with other public entities as sponsors of flood control projects, water conservation districts, water districts, and conservation districts.

U.S. Army Corps of Engineers. By an act of Congress in 1917, the Corps of Engineers was empowered to study and adopt a major flood control plan to minimize the seasonal overflow of navigable streams and their tributaries in the Sacramento and San Joaquin Valleys. After many proposals were considered, a modified version of the 1911 California Debris Commission Plan was adopted. The revised plan consisted of a system of flood control reservoirs, leveed streams, bypasses, weirs, canals, and drainage pumping plants. Although it has never been fully completed, the plan in use today is essentially the same as the one that was adopted in 1917. 1.51

The Corps was originally charged with constructing facilities to provide the maximum flood protection for thousands of acres of agricultural land and the many communities situated on major streams in the Central Valley. Later the Corps was commissioned to establish rules, codes, and standards for maintenance of certain project levees, to be performed by State and local agencies wholly at their expense. The Corps' responsibility for planning and building flood control facilities was later expanded by Congress to include other parts of California outside the Central Valley.

Congress has recognized the impacts of flood control development on fish and wildlife. The construction of bank protection units now includes mitigation measures to compensate for environmental losses. Mitigation programs are coordinated with The Reclamation Board and include acquiring prime wildlife areas in fee or through easement and improving marginal areas through revegetation efforts. 1.51 (Cont.)

The Reclamation Board. The Reclamation Board was created in 1911 and reorganized in 1913 as an agency of the State of California to develop and carry out a plan to control flooding along the Sacramento River and its tributaries. The Board's jurisdiction was later extended to include the San Joaquin River and its tributaries. 1.52

Recent legislation has increased the scope of the Board to include more active participation in federal flood protection projects and designated floodplain management in the Central Valley.

Changes in federal participation and policy have altered the operation of the Board from time to time, until now its functions include approving plans, acquiring rights of way and flowage easements, providing assurance of local cooperation, and enforcing maintenance requirements established by the Corps of Engineers. The Board takes lead responsibility for the long-term management and perpetuation of mitigation areas. The Board also reviews applications for any alteration or encroachment of any adopted plan of flood control in the Central Valley and approves or denies the request.

The Board has been administratively part of the Department of Water Resources since 1958, but it functions as a separate agency in exercising its original flood management responsibilities on the Sacramento and San Joaquin rivers and their tributaries.

Staff of the Flood Control Project Branch of the Department of Water Resources has the lead role in representing The Reclamation Board with the Corps of Engineers in developing and maintaining mitigation lands. Questions regarding the location and management of revegetation easements and other mitigation properties should be referred to the Flood Control Project Branch.

(The Reclamation Board, a booklet published by the Board, describes the Board's history and its present involvements.)

The California Water Code. The rules, regulations, and standards set by the Corps of Engineers for operation and maintenance of federal flood control projects are incorporated into the California Water Code. They cover all phases of the use, rights, and distribution of California's water resources. 1.53

(Secs. 8520-9377 codify the law governing The Reclamation Board. Secs. 8340-9577 and Sec. 12878 assign certain responsibilities to the Board regarding maintenance of flood protection works following construction.)

Responsibilities of the Department of Water Resources 1.60

Since 1947, the Department has inspected project facilities semi-annually for compliance with federal, State, and local maintenance requirements. The Department also prepares annual reports that rate the degree of compliance (Water Code Sec. 8371). This work is part of the assurances The Reclamation Board gives the federal government that certain flood control facilities built by the Corps of Engineers are properly maintained. In areas of the State beyond the limits of the Sacramento-San Joaquin Valley and outside the jurisdiction of The Reclamation Board, the Department has the authority to form maintenance areas for federal flood control projects, when necessary, and to assume responsibility for their maintenance (Water Code Sec. 12878 et seq.).

Maintenance Areas 1.70

The California Water Code (Sec. 12878) empowers The Reclamation Board to establish a maintenance area within its area of jurisdiction when the Department has determined that a unit of the project is not being properly maintained by the local agency having that responsibility. Maintenance costs in a maintenance area are apportioned to property owners in the protected area on an ad valorem basis (according to the value), or on a land use basis, and the assessment is collected as a special benefit assessment with county taxes.

Responsibility for operation and maintenance of a maintenance area is assigned to the Department of Water Resources. Such responsibility may be returned to a local agency when it has demonstrated the desire and financial ability to meet the obligation.

Local Agencies 1.80

Local agencies may be organized under any of several designations, depending on the purpose for which they were formed. These include water, reclamation, levee, irrigation, drainage, protection, water storage, flood control, or special districts. As used in this Guide, "local agency" refers only to those organizations that have a direct flood control maintenance responsibilities.

The procedures for dissolving a local agency are contained in Water Code Secs. 56000 et seq. ("Cortese-Knox Local Government Reorganization Act of 1985"). To begin dissolution proceedings, a petition signed by at least 5 percent of the registered voters must be filed with the Local Agency Formation Commission.

The responsibilities and maintenance procedures set forth in this guide refer principally to federal flood control projects. However, local agencies whose responsibilities may include nonproject and privately owned flood control facilities may also follow these guidelines.

SECTION 2

SAFETY

Permit Requirements 2.10

The superintendent is usually required to obtain a permit before certain maintenance or flood control work can be performed. Permits are issued by city, county, State, or federal agencies, any of which may impose restrictions and regulate other conditions related to the proposed work. Permits may be issued on an annual basis or for some other limited term.

Following is a partial list of maintenance operations for which permits must be obtained.

Equipment Transportation. Moving equipment and vehicles that exceed the legal limits for height, width, and weight requires a permit from the California Department of Transportation (Caltrans) and/or the city or county through which a vehicle unit must pass. A blanket permit may be obtained in some cases. Requirements for legal tie-downs will vary. The California Highway Patrol requires that all regulated loads follow the specific procedures contained in the California Administrative Code, Title 12, Subchap. 7. When DWR personnel are transferring equipment (a nonregulated load), they are required to follow the DWR Maintenance Safety Rules Manual, Sec. 3.17. The California Vehicle Code defines a legal load and the conditions under which such loads may be carried. 2.11

Traffic Control. When traffic must be controlled as a safeguard during maintenance operations on or next to a public street or highway, a notification and approval permit must be obtained from Caltrans or the city or county involved. Proper warning signs must also be placed in accordance with State and local codes. Burning operations, tree removal, levee erosion repair, slope mowing, and herbicide spray programs are among the projects that may require traffic control. 2.12

Restoration and Repair. Riverbank and levee stabilization activities that require more than one cubic yard of material per running foot for a distance of more than 500 feet or more than 1,000 cubic yards of import material are covered under Sec. 404 of the Federal Clean Water Act. However, in California, approval is required from the Regional Water Quality Control Board. Maintenance work exceeding the foregoing specifications will require permits from the Corps of Engineers. Other permits may be needed from the California Department of Fish and Game (Sec. 2.14). Work of this type may be performed by the Corps of Engineers. 2.13

Channel Clearing. Any project that involves moving soil, sand, or gravel in or near a body of water requires the agency planning the project to reach agreement with the Department of Fish and Game (DFG Code, Secs. 1601-1603). Sec. 1601 applies to government agencies and public utilities. The agency uses Form FG 2023 to notify DFG of its plans. 2.14

The superintendent should coordinate with the nearest U.S. Fish and Wildlife Service, Endangered Species Office, to determine any requirements for avoiding or mitigating impacts to endangered species.

Once the agency has reached agreement with DFG, routine maintenance work in or near a body of water does not require any further notification or agreement, unless there has been substantial change in vegetation or the fish and game resource. However, by a memorandum of understanding between the two departments, DWR does obtain agreement from DFG for every routine maintenance proposed each year. DFG has similar understandings with other agencies regarding this type of work.

Work of this nature may require additional permits from the Corps of Engineers and the Water Resources Control Board.

Burning. Burning of vegetation on levee slopes or debris left by floods or channel clearing is generally restricted to rural areas. This work requires permits from local fire districts and the local air pollution control board. These agencies must also be notified when the work is to begin. In special cases, when burning is banned for environmental or other reasons, a variance may be obtained, provided the need for the work can be justified. 2.15

Rodent and Vegetation Control. The use of certain "restricted use" materials to control rodents and vegetation on levee slopes and in channels requires a permit from the county agricultural commissioner in the county where the work will be done. 2.16

To obtain a permit to purchase and apply restricted use materials, applicants must possess a Qualified Applicator Certificate issued by the Department of Food and Agriculture.

When a seasonal or annual permit is obtained for restricted use materials, a notice of intent containing specific information about the proposed project must be submitted to the county agricultural commissioner 24 hours before the start of work. The commissioner may waive the 24-hour requirement or modify some of the information required, if assurance is given that the work will be performed according to proper safety and environmental considerations.

A monthly report summarizing pesticide use must be submitted to the county commissioner by the 10th of each month following the use of any pesticide.

A special permit is also required from the California Department of Fish and Game to take beavers, badgers, and other large rodents that can damage levees. 2.16 (Cont.)

Worker Safety 2.20

Maintaining flood control project facilities generally involves using heavy equipment, vehicles to transport heavy equipment, and cutting tools, and handling and using toxic materials. Also, workers are sometimes exposed to weather extremes that create physical hazards.

The importance of taking all reasonable steps to ensure the safety of workers should be kept in mind at all times. Statements such as "No job is so important that it cannot be performed safely" and "All accidents are avoidable" are sometimes challenged, but they are, nevertheless, excellent bases for adopting safety practices.

The Department of Water Resources, acting on behalf of the State of California, is serious about holding injuries to its employees to the lowest possible level. In keeping with this policy, DWR employees who work on flood control project facilities are required to attend safety training classes (Sec. 2.26). DWR superintendents are expected to fully enforce all safety rules and regulations and support safety measures.

Similar programs to promote safety are recommended for local maintaining agencies.

Safety Training 2.30

The Department of Water Resources trains its flood control project personnel in all phases of flood control project maintenance. Employees whose jobs involve such work must satisfactorily complete all relevant training courses before they may assume field maintenance duties.

The superintendent should not assign any employee to potentially hazardous work until the employee is properly trained and considered to be qualified or can be assigned to work under the direction of a properly qualified person.

The superintendent will schedule courses to meet operational needs and will keep complete and accurate records of courses completed by employees.

When it is convenient, DWR crew leaders are expected to supplement classroom training by providing new employees with field duties that relate to their classwork. Superintendents should require each employee to prepare a training development plan.

Employees whose duties require handling pesticides must be trained thoroughly in the laws and regulations related to the handling of pesticides and the use of protective clothing and equipment. They must also be well informed about the common symptoms of pesticide poisoning and be warned that it is dangerous to eat, drink, or smoke while engaged in such work. 2.30 (Cont.)

Safety Meetings. All DWR employees who work on flood control project facilities must attend regular safety meetings. The superintendent on the job is responsible for arranging the meetings and providing instructional material for the topic of discussion. Active participation by all personnel is encouraged, and the date, subject matter, and names of those present are kept on file. 2.31

The Department also encourages frequent tailgate meetings at the job site. The crew leader conducts informal discussions of safety practices that apply to the work at hand. Procedures for performing the work are reviewed, possible dangers are brought to light, and preventive measures fully discussed. The Department recommends that superintendents of local agencies adopt similar useful practices.

The Department sponsors a Flood Fight School, scheduled annually, at the Bryte maintenance yard in Sacramento. Attendance is mandatory for all DWR flood control project employees. All local agency personnel with flood control responsibilities are strongly urged to attend this class. Classes will be scheduled at other times upon request.

Protective Gear. The Department issues required protective gear to flood control project employees, along with directions for recommended and mandatory uses. This equipment is provided at no cost to the employees, who are responsible for using it as directed, keeping it in good repair, and requesting replacements when items are no longer serviceable. 2.32

All agencies must provide the following items of clothing and equipment. Other protective gear may also be necessary for certain types of tasks.

Hard Hats. Hard hats are worn to prevent head injuries. The use of an approved hard hat is mandatory for all personnel involved in flood control project maintenance activities, whether they are performing field work or only observing the work of others. A smaller, lighter-weight version of the hard hat, commonly called a bump hat, is acceptable for some operations.

Protective Face Wear. The use of safety glasses, goggles, or face shields are necessary to safeguard against eye injuries caused by flying objects, pesticides, or other environmental hazards. All workers are encouraged to wear appropriate protective face wear for all maintenance activities. Use of this equipment is required for certain activities.

Gloves. Simple cotton gloves or leather mittens can minimize painful burns, cuts, and bruises during use of hand tools. 2.32 (Cont.)

Coveralls. Coveralls are issued to DWR field employees to protect their own clothes from undue damage, wear, and soiling. The coveralls are laundered regularly at the Department's expense and replaced when no longer fit for use. Coveralls offer some degree of safety against scratches and other minor injuries, but workers should be cautioned that loose clothing is hazardous when worn by someone who is operating machinery with exposed moving parts.

Particle Masks. The use of a particle mask prevents dust particles and other air-borne pollutants from entering the respiratory system.

Ear Plugs. Fitted ear plugs or approved ear muffs must be worn by DWR employees who are operating or working near machinery that emits noise above 85 decibels.

First Aid Kits. Approved first aid kits are installed in all State-owned vehicles. Drivers are responsible for seeing that kits are fully stocked with the appropriate items. The kit is only for temporary emergency care of injuries in the field. Both the injured person, if able, and management personnel should determine whether additional medical attention is advisable. A formal accident report is always required for all accidents. First aid training, including cardiopulmonary resuscitation (CPR), is required of all DWR field personnel.

Safety Belts. Safety belts are installed in all State-owned vehicles, and their use by the operator and all passengers is mandatory. The driver is empowered to enforce this regulation. Failure by driver or passengers to "buckle up" can result in a fine, suspension without pay, or termination.

Protective Gear, Pesticide Use. All flood control workers who handle pesticides must be equipped with protective clothing and equipment appropriate to this work, as directed on the pesticide label. This type of gear includes the following items: 2.33

Gloves. Appropriate protective gloves, worn as directed on a pesticide label, are mandatory when workers are handling pesticides or other hazardous material.

Aprons and Disposable Coveralls. DWR employees are required to wear protective clothing made of a nonabsorbent material when they are mixing and loading pesticides or rinsing emptied pesticide containers. Disposable coveralls should also be worn by any employees who may come into contact with the pesticide during application.

Particle Masks. A particle mask is required for any DWR employee who is handling herbicides.

Rubber Boots. Rubber boots are necessary for employees who mix and load pesticides and for pesticide applicators who may come into contact with the spray mixture. 2.33 (Cont.)

(See also Sec. 2.41.)

Foul Weather Gear. Foul weather gear is issued for use primarily during flood emergencies. Few, if any, field maintenance activities can be performed satisfactorily in stormy weather. During such periods, the superintendent should assign duties in locations that provide some protection from the elements. In a flood emergency, however, employees are expected to accept many weather-related hardships. 2.34

Foul weather gear issued to DWR employees usually includes waterproof parkas or jackets, rubber boots (ankle, knee, or hip height), water-repellent trousers, and life jackets approved by the U.S. Coast Guard.

Safe Storage and Handling of Pesticides 2.40

Any use of a pesticide requires strict observance of laws and regulations regarding safe application, control of storage, transportation, disposal of empty containers, cleanup of spills, protective clothing, and procedures for personal and equipment cleanup.

Because of the toxic characteristics of pesticides and the potential hazards involved in their application, both to users and their surroundings, all aspects of pesticide use are closely regulated by the California Department of Food and Agriculture and county agricultural commissioners' offices. Before DFA authorizes any pesticide for specific use, the pesticide must first be extensively tested for effectiveness and its possible effects on people and the environment.

Pesticides are rated by degree of toxicity: "Danger," "Warning," or "Caution". This must be prominently displayed on the pesticide label. The label must also display appropriate warnings, detailed directions for mixing and use, and instructions to follow in case of injury by accident or misuse. The label is the law. Read it carefully before starting any application of a pesticide.

Safe Working Conditions. The superintendent is responsible for providing safe working conditions, adequate training, and proper supervision of all personnel who mix, load, transport, apply, or otherwise handle pesticides. Stringent controls adopted by the Department of Food and Agriculture regulate the handling, mixing, application, and cleanup of pesticides. 2.41

The superintendent is responsible for seeing that the mixing site at which employees are handling pesticides has a designated facility for changing into protective clothing and for washing when pesticide use is completed. It should be equipped with an ample supply of water, soap, and towels for personal use.

The superintendent must also provide employees with appropriate protective clothing, as the pesticide label directs. Also, equipment used to mix and apply pesticides must be in good repair and safe operating condition. This equipment is subject to inspection by county authorities. 2.41 (Cont.)

Emergency Medical Care. The employing agency must provide emergency medical care for employees whose work includes mixing, loading, or applying pesticides. The name, address, and telephone number of the medical facility providing such care must be conspicuously posted at the work site and on the application vehicle. Whenever a pesticide-related illness is suspected or whenever a worker has been apparently endangered by overexposure to a pesticide the superintendent must see that the employee receives immediate medical attention. 2.42

Restricted Materials. Certain pesticides are more dangerous than others. These are classified as restricted materials and are subject to limited use and more stringent controls. Their use requires special permits (see Section 2.16). Applicators must hold a certificate as a qualified applicator or work under the direct supervision of a qualified applicator. 2.43

Laws and regulations regarding the application of restricted materials and the Pest Control Licensing and Certification Program are subject to change or revisions without official notification. The superintendent is responsible for keeping informed of any changes. This information is available from the California Department of Food and Agriculture, 1220 N Street, Sacramento CA 95814, or the county agricultural commissioner.

Storage of Pesticides. Pesticide containers, both full and empty, must be stored in a locked enclosure in accordance with the label on the container. When pesticides in storage carry either "Warning" or "Danger" precautions on the label, warning signs in both English and Spanish must be posted on all walls of the storage area. The signs must be readable from a distance of 25 feet. 2.44

Transportation of Pesticides. Pesticides must not be transported in a compartment that is also occupied by people, food, or animal feed. Pesticides, empty containers, and equipment must be attended at all times while en route. Vehicles used to transport or apply pesticides must be thoroughly cleaned before they are assigned for other uses or are sent to be repaired. 2.45

Rinsing and Disposal of Used Pesticide Containers. A triple rinse and drain procedure approved by the Department of Food and Agriculture must be followed to prepare emptied containers for disposal. Contact the county agricultural commissioner's office for specific requirements on container rinsing and disposal. 2.46

Pesticide Service Containers. As defined by the Department of Food and Agriculture, a service container is any pesticide container, other than the original labeled container, that is used to store, hold, or transport a pesticide or a use-diluted pesticide. 2.47

Each service container must carry the following labeling:

- o Name and address of the person or company responsible for the container.
- o Identity of the pesticide (common name or product name). If it is a use-diluted pesticide, the word "diluted" must precede the name.
- o A signal word from the original label ("Danger," "Warning," or "Caution").

Pesticide Spills. Spillage of a pesticide or other hazardous material can rapidly become a major health or environmental problem. Whenever a spill occurs, immediate corrective action must be taken, regardless of the type of toxic substance or the amount spilled. The first priority is to give first aid and further medical attention to persons who were exposed to the pesticide. After that, the incident must be reported and the area must be decontaminated. Under no circumstances should pesticide spills be hosed down. 2.48

Contact the local county agricultural commissioner's office for specific requirements for spill cleanup.

SECTION 3

VEGETATION MANAGEMENT

The importance of a balanced vegetation management program that preserves the environment without sacrificing the integrity of flood control structures can't be overemphasized. Natural or planted vegetation on or near project levee slopes can significantly enhance the effectiveness and appearance of a project. When properly managed, vegetation deters surface erosion from rain and runoff. The preservation of vegetation, especially in acquired easement areas, is essential to the management of the flood control project.

However, uncontrolled growth can interfere with routine maintenance and inspection, inhibit flood fight activities, and provide a haven and food sources that attract burrowing animals. Also, when large trees are toppled by wind, disease, or old age, they often dislodge broad areas of protective sod and earth and may divert water into a levee section.

Standards for vegetation control on landward levee slopes differ from those for waterward levee slopes, berms, and overflow areas. Vegetation characteristics, species, and methods of management may vary, depending on the area and soil conditions. Burning, mowing, dragging, spraying, pruning, brush-cutting, and planting are all effective vegetation management tools.

When a levee vegetation management program is being planned, several factors should be considered. Levee slopes must allow visibility for regular maintenance inspections and high-water patrolling. Levee personnel must be able to readily detect trouble spots from the crown roadway. No vegetation should be allowed to grow within 10 feet of the landside toe of the levee because this is where boils and excess seepage are most likely to occur. Also, both landside and waterside toes are often used as access points for maintenance.

Levee slopes should also be kept free of large areas of bunched, woody, or clumped vegetation that would interfere with flood fighting or emergency repairs. Agricultural prunings and other debris are special targets for removal because they attract burrowing rodents. Crown roadways must be kept free of vegetation, and they should be graveled to provide a sound, driveable surface during floods.

Burning 3.10

Controlled burning of vegetation on levee slopes is an effective method of improving visibility for levee inspection and maintenance. However, in recent years, to minimize air pollution, municipalities and counties have adopted stringent burning regulations. Burning has been banned in some areas, especially in urban areas where air pollution is now recognized as a serious and growing problem. Where burning is permitted, the operation is normally scheduled in July and August when the grasses are thoroughly dry, the game bird hatch has been completed, and most nearby crops harvested. Local air pollution control boards are empowered to designate certain hours and days as suitable for agricultural burning.

On days when burning operations are scheduled, the foreman or other person in charge calls the local air pollution control board for clearance and, if permission is obtained, notifies the fire district having jurisdiction in the proposed burn area (see Sec. 2.15). 3.10 (Cont.)

Because of the risks involved, a supervisor usually oversees extensive burning operations. The amount and type of equipment used and the size of the crew may vary in relation to the size of the area to be burned and conditions on and near the burn site.

As an example, a major operation may include a 12-worker crew, with torchmen, truck drivers, hose tenders, surveillance crews, and a water supply tank truck operator. Normally, three 500-gallon water tanks mounted on flatbed trucks, with appropriate hoses and pumps, are used to control the intensity and range of the burn. A 150-gallon water tank mounted on a four-wheel-drive pickup truck is used for surveillance and emergencies. When available, a 4,000-gallon tank truck stands by to refill the fire trucks. The supervisor drives a pickup truck carrying torch fuel and other supplies and directs the operation.

The fire should not be allowed to approach flammable structures. All such structures in or next to the area to be burned should be monitored after they have been chemically fireguarded or soaked with water. Wherever practicable, firebreaks should be placed at the toes of the levee to prevent the fire from spreading to adjoining areas.

All fires, including smoldering debris, must be entirely extinguished before the last employee leaves the burn site.

Mowing 3.20

Mowing levee slopes is an effective alternative where burning is either prohibited or would create an undue hazard to adjacent property or vegetation. Standard levees with uniform surfaces, few encroachments, and slopes no steeper than 2 feet horizontal to 1 foot vertical are ideal for mowing.

The usual procedure is to mow the levee shoulder and a strip 4 feet on the upper part of the levee with a flail mower. A mower with a telescope boom and rotating mowing head is usually enough to mow slope surfaces up to 30 feet wide. Where a 10-foot right of way is available, slopes can be mowed from the levee toe. A push-type power mower or weed-eater is also beneficial for some irregular conditions. A mower operating in dry vegetation is a fire hazard. If the cutting blade strikes a hard object, creating sparks, the vegetation can be ignited. For that reason, a small water truck should be available.

Spraying 3.30

The use of herbicides to manage vegetation and control weeds can be extremely effective and economical. The wide variety of spray material and application equipment make the use of herbicides possible for many maintenance activities.

Permits must be obtained for some herbicide applications, and all safety regulations, including those involving the use of protective gear, must be strictly followed. Care should be taken to prevent spray from drifting into nontarget areas. Only herbicides that do not vaporize readily should be used.

Broadleaf Selective. Many levee slopes are managed to encourage a solid cover of naturally occurring grasses. Broadleaf weed species on a grass-covered slope tend to be spiny and very tall, and obscure visibility, prohibit access, or otherwise interfere with maintenance and inspection. Broadleaf weeds can be eliminated from desirable sod by broadleaf selective herbicides. Several of these herbicides are also residuals, which means they are incorporated into the soil by rainfall and remain active for some time. Application rates of broadleaf selective herbicides must be closely followed. At higher rates, many of these herbicides will also damage or kill desirable grasses and young trees. These herbicides vary in time of application and the broadleaf species they kill. Special care is needed to keep these materials from reaching desirable vegetation. The county agricultural commissioner's office can supply specific recommendations. 3.31

Bare Ground. Some levee areas, including crown roadways, access points, toe roads, and fireguards, are usually kept free of any vegetation. Nonselective residual herbicides are an economical means of keeping an area free of vegetation for an extended period. Generally, the higher the application rate, the greater the number of species affected and the longer the period of residual activity. Extreme care should be taken to keep these material from drifting into areas where vegetation is desired. Careless applications can create large bare areas of ground that are susceptible to erosion. Careful applications can protect flammable structures from accidental or controlled fires, allow gravel reclamation and roadway maintenance, and make safe travel possible on roads, especially in wet weather. 3.32

Spot Treatment. Spot treatment of weeds is used in a variety of situations where the low density of the target species does not warrant a broadcast application or where the area is inaccessible or otherwise unsuitable for broadcast equipment. 3.33

Spot treatment is often used with residual herbicides for fireguarding around structures (Sec. 3.32). It can be used to target a specific weed pest such as Johnson grass or to touch up areas that have been specially sprayed with a broadcast application. The choice of a specific herbicide or combination of herbicides depends on the target species and the area to be sprayed. Contact, residual, and translocating herbicides can all be used for this type of work. (A translocating herbicide is one that moves through a plant into the roots.) The county agricultural commissioner's office can make specific recommendations.

Small-scale spot applications may only require a hand-held pump sprayer, while larger applications could require use of a truck-mounted spray unit with a hose and reel. Since spot applications are generally limited to small, precisely defined areas, special care is needed to minimize drift, especially with high-pressure spray rigs. 3.33 (Cont.)

Brush and Vines. Brush and vines growing on levees obscure the slope, creating serious inspection problems. Low, dense, and entwined vegetation can prevent routine or emergency access, impede floodflows, divert currents, or plug pumps and drains. Where permissible, the use of herbicides to control brush and vines can be extremely effective, often more so than mechanical clearing, which may stimulate regrowth or break up existing plants into many new plants. 3.34

Spot spraying is generally the application method used to control vines (Sec. 3.33). To completely kill the unwanted plants, a translocating herbicide is necessary. Contact herbicides or incorrectly used translocating herbicides will kill only the above-ground part of the plant, resulting in substantial regrowth in the following season. Special attention should be given to correct timing of application and to obtaining thorough spray coverage. The addition of an inactive water-base dye can assist spray applicators to achieve uniform spray coverage. Poor coverage is likely to result when plants are dormant, stressed by drought, or covered with dust.

Larger trees can be controlled by cutting them down and immediately spraying or painting the stump with a concentrated herbicide registered for such use.

Where all other options have been exhausted, aerial application of herbicides to control brush over large areas can be considered. This procedure usually requires applying for a 24C Special Local Need Permit from the California Department of Food and Agriculture. The product manufacturer and all other regulatory agencies must concur before this type of application can be approved. Spray drift from an aerial operation must present no hazard to humans, fish, wildlife, water, or adjacent property.

Federal law (the Endangered Species Act) prohibits the taking of threatened and endangered species without permission of the Endangered Species Office (ESO) of the U.S. Fish and Wildlife Service. Contact the Corps of Engineers, the Fish and Wildlife Service, or the Department of Fish and Game to determine what is endangered.

SECTION 4

PROJECT MAINTENANCE OPERATIONS

Basic maintenance programs related to federal flood control project facilities are required by the Corps of Engineers, inspected by the Department of Water Resources, enforced by The Reclamation Board, and carried out by local agencies and the Department of Water Resources.

Most maintenance practices in use today have been modified over the years to meet the increased emphasis on preserving ecological and environmental values. Although maintenance costs have risen, the integrity of the flood control system has been preserved and the environment improved.

The maintenance programs most profoundly affected by environmental considerations include channel clearing, rodent control, and vegetation management on or next to project levees, berms, and overflow areas being developed for project mitigation under The Reclamation Board's jurisdiction. Maintenance activity in revegetation and other mitigation areas requires special care. This section contains guidelines for specific maintenance operations. Further directions appear in the Board's Guide for Vegetation on Project Levees.

Crown Roadways 4.10

Keeping levee crown roadways, ramps, and State-maintained access roads serviceable is the objective of the crown roadway program. Essentially, the work involves grading and graveling unpaved road surfaces.

A road maintainer (grader) with a 12-foot moldboard is best suited to smooth the road surface, to minimize ponded water, and to recover gravel displaced by traffic. On crown roadways where heavy traffic has compacted the surface so much that grading causes excessive wear of the blade, scarifying may first be required to loosen the surface. Scarifying the roadway before replenishing the road rock also enhances the bonding of old and new surfacing materials. Road surfaces should be crowned (gradually sloped from centerline to shoulder) to ensure proper drainage.

Dust created by levee crown maintenance and repair work can be a nuisance to nearby residents. It can also damage certain crops growing nearby. Workers should use care during these operations.

Some crown roadways require more frequent maintenance than others, principally because of the heavier traffic load they carry. All levee roads, however, should be graded at least twice a year. In the fall after the first rains, and in late spring, before the levees begin drying out and getting dusty, are opportune times for this operation.

Grading of crown roadways is usually a one-person job. While the work is being done, the equipment can be parked overnight in a convenient nearby location, provided the site is secure and the property owner grants permission to use it. If such an arrangement is not possible, the equipment should be returned to home base or the maintenance yard. The operator of the equipment is required to take reasonable security precautions when not in attendance at the unit. The operator is provided a pickup truck to travel to and from the job site and to haul lubrication and service equipment. A portable two-way radio with a range of at least 25 miles should be provided for emergencies. 4.10 (Cont.)

Operators of road grading equipment are required to wear hard hats. Safety glasses, masks, and gloves are optional but recommended.

Vegetation Management on Crown Roadways. Uncontrolled growth of weeds and grasses on crown roadways may become a maintenance problem. Dense vegetation prevents the grader from operating effectively. Nonselective residual herbicides are generally used to control weeds on crown roadways. Roadways should be sprayed only after grading is completed. (See Sec. 3.32 for information on controlling weed growth on crown roadways.) 4.11

Appropriate permits must be obtained before crown roadways are sprayed (see Sec. 2.16).

Fireguarding. Structures or other facilities occupying parts of a flood control project must be protected from fire, both accidental and controlled. Removing flammable debris and wild growth from the immediate area is an important fire prevention procedure. Structures must be guarded before or during the early stage of vegetative growth. (See Secs. 3.32 and 3.33 for additional information on the use of herbicides for fireguarding.) 4.12

Levee Slopes and Rights of Way 4.20

Levee slopes should be free from nonessential structures, encroachments, or vegetative growth that could interfere with or prevent inspection or hamper flood fighting activities.

Vegetation Management on Levee Slopes. All earthen levees must have some sort of erosion protection and yet permit inspection and flood fighting. Sod-forming grasses and ground covers provide the desired protection without interfering with these activities. In some circumstances, The Reclamation Board also permits certain trees and shrubs to grow on levee slopes. (For specific requirements regarding permissible vegetation, consult the Board's Guide for Vegetation on Project Levees.) Broadleaf weeds growing among desirable grasses can be effectively controlled by selective herbicides (see Sec. 3.31). 4.21

All levee slopes need thorough periodic inspection for soil erosion; animal burrows; weed infestation; diseased, weak, or damaged trees; and other undesirable growth. Frequency of inspection depends on the nature and location of each levee. Regular mowing or burning enhances inspection. Special care should be taken to protect mitigation areas from mowing and burning. (See Sec. 3 for vegetation management on levee slopes.) 4.21 (Cont.)

Levee slopes are vulnerable to burrowing rodents, primarily ground squirrels. (See Sec. 5 for control of rodents.)

Dragging. Dragging of levee slopes is a multipurpose operation that helps ensure the integrity of a levee system. It is generally done by pulling a heavy dragging implement, such as a discarded track from a tracklaying tractor, with a heavy-duty track-laying engine. The drag is rigged with cable controls so the operator can regulate its angle and reach. 4.22

Dragging repairs minor surface erosion or irregularities, preventing more serious erosion. However, disturbing the soil stimulates the growth of weedy plants. DWR personnel schedule broadleaf selective spraying with a pre-emergent herbicide for the fall, following dragging operations (see Sec. 3.31).

Hard hats, safety glasses, ear plugs, and a breathing mask are required protective gear for this operation.

Care is needed to avoid removing trees and shrubs that do not interfere with levee inspection. In areas containing elderberry shrubs, coordination with the Endangered Species Office, U.S. Fish and Wildlife Service, is required.

Channel Clearing 4.30

A channel is the entire area of a waterway from the top of one bank to the top of the opposite bank. The general category includes drainage canals, ditches, and sediment settling basins.

River channels and floodways are rated and designed to carry specific anticipated peak flows. Accumulated silt and wild growth, if not controlled, can lower flow capacities and impede flows, causing water to rise above intended levels. Such obstructions may also divert flows, eroding banks or levees.

The Corps of Engineers is responsible for periodically dredging navigable channels to remove silt and snags and for removing aged trees deemed to be potential hazards to navigation.

Local agencies and the Department of Water Resources are responsible for clearing channels of excess debris, brush, and other harmful vegetation. One method is to uproot and pile the vegetation with a medium or large bulldozer with a brush rake attachment. A dragline may be better under certain conditions. Piled vegetation must be removed from the floodway before flood season. Where permitted, burning is the most convenient disposal method. (The Department of Fish and Game and The Reclamation Board are the principal permitting agencies.)

An alternative method, and one that is generally more acceptable, is selective cutting with hand tools, including chain saws. Woody growth of selected species less than 8 inches in diameter can be disposed of with a chipper or "brush hog." Spreading and disposal of chips is regulated by the Department of Fish and Game. Personnel of the California Conservation Corps are often available to conduct selective clearing work at low cost. DWR's Flood Project Analysis Section can assist in project design. Permits for channel clearing operations are discussed in Sec. 2.14. 4.30 (Cont.)

Unless soil and plant roots are also removed, mechanical control provides only a short-term solution to brush problems. Removal of above-ground plant material stimulates regrowth and suckering in most brush species, often resulting in a heavier stand than originally existed.

Where permitted, translocating herbicides can kill above-ground and below-ground plant parts, eliminating or greatly reducing regrowth. Spraying brush in channels without suitable access usually requires a tractor and a trailer-mounted storage tank with a high-pressure pump. Where channels are narrow or where there is improved access, it may be possible to use traditional spray equipment fitted with a long hose. Where all other options are regarded as ineffective, the aerial application of herbicides can be considered. Except as specified on the pesticide container label, special care must be taken to prevent drift or contamination of waterways (see Sec. 3.34).

Safety practices and gear requirements for channel clearing are the same as those for heavy equipment operation and the handling, use, and disposal of toxic materials. Hard hats, safety glasses, and ear plugs are required for operating chain saws, tractors, and chippers. Consult the pesticide label and also see Sec. 2.22 for recommendations and requirements on the use of specific protective clothing to be worn while handling pesticides.

Drainage Facilities 4.40

Drainage ditches, canals, and settling basins are essential parts of flood control operations and must be periodically inspected and maintained. The flow capacity of drainage facilities can be impaired by undesirable vegetation and built-up silt deposits, primarily from bank sluffing. These facilities can function effectively and safely only when silt and excess growth are periodically removed with a dragline or other suitable equipment. Aquatic herbicides can be used to help control undesirable vegetation. (See Sec. 3.33; also, consult the county agricultural commissioner's office for recommended materials.) Heavily eroded banks should also be resloped and/or revetted with rock, when needed.

Overhead powerlines and underground lines carrying communications, natural gas, oil, or water can endanger channel clearing operations. Most of these hazards can be identified by markers or warning signs. Specific information about location and depth of service lines can be obtained by calling Underground Service Alert (1-800-642-2444).

Control Gates and Culverts. Concrete passageways or corrugated metal pipes of varying diameters equipped with manual or automatic flood control gates are situated at appropriate sites in the flood control project. If these facilities malfunctioned, particularly during high-water conditions, flooding could occur in some inhabited or farmed areas. Therefore, normal maintenance of these structures includes keeping the intake and discharge areas free of constricting debris, silt, and wild growth, and inspecting and testing the performance of the control mechanisms. Slide or flap gates must be inspected and tested in the early fall before high water occurs. 4.41

Minor Structures 4.50

This category includes mile markers, gates, barricades, and miscellaneous signs. (See Figures 1 - 7, following Sec. 4.67.)

Mile Markers. Mile markers are signs installed on the levee shoulder at half-mile intervals to identify unit designations and levee miles. The markers are seven-foot metal posts with anchors and plates. The posts are driven or set in concrete to a depth of three feet, and the plates are welded to the tops with their faces perpendicular to the levee centerline so they are visible to traffic in either direction. Reflectors fastened to the plates make the markers easy to find when visibility is poor. 4.51

Maintenance of levee mile markers consists mainly of replacing reflectors and damaged plates and keeping signs clean and readable. Vegetative growth that hides the signs from view should be kept clear, either mechanically or with herbicides (see Sec. 3.33).

Gates, Barricades, and Signs. Gates, barricades, and miscellaneous signs are installed to prohibit or discourage unauthorized traffic from using flood control project facilities. Trespassing and vandalism have increased markedly in recent years because of the rise in popularity of recreational vehicles and expansion of housing and industrial developments. 4.52

Gates on the crown roadway and barricades that extend down levee slopes and across berms are usually effective protection against unlawful entry by motor vehicles. An underlying property owner who needs even greater security may apply to The Reclamation Board for a permit.

Maintenance of gates, barricades, and signs consists mostly of keeping them in good appearance and working properly, including their locking systems. Periodic washing, painting, straightening, and and replacement of reflectors are general maintenance requirements. Visibility must be maintained by eliminating tall vegetation, either mechanically or with herbicides (see Sec. 3.33). Accurate records of the date, time, and type of maintenance performed must be kept to protect the maintaining agency in the event of litigation. (See Figure 7, "Minor Structure Maintenance Report," following Sec. 4.67.)

An acetylene torch or arc welder may be used to install and repair gates, barricades, and signs, but because of the fire danger, precautions must be taken. A torch or welder should never be used near dry vegetation or when unusually hot or windy conditions exist. At all times, their use should be backed up with a minimum of firefighting equipment: shovels, rakes, appropriate extinguishers, and a supply of water with means of delivering it to a blaze. 4.52 (Cont.)

State and local standards for positioning of signs, the distances required between them, and the messages they carry must be observed before the signs are legal. Because regulations and codes vary from area to area, it is best to contact the city or county public works department having jurisdiction. DWR uses signs referring to the State Vehicle Code, Sec. 2116.

Mitigation Measures. Where mitigation and enhancement measures are provided to protect fish and wildlife, endangered species, or other environmental values, care should be taken to avoid harm to these features and to maintain them and any special markings, protective features, etc., as they were installed. These measures are becoming more widely known and installed in connection with federal and state projects as a result of permits from the Corps of Engineers. (See Figures 1 - 7 following Sec. 4.67.) 4.53

Major Structures 4.60

A number of flood control facilities are essential parts of the Sacramento and San Joaquin Rivers flood control projects. These include fixed weirs; control weirs; pumping plants; and diversion, drop, and outfall structures.

Fixed Weirs. A fixed weir designed for flood control functions as a section of a levee. Its crest is at a selected elevation, usually original ground level. The purpose of such a fixed weir is to relieve pressure on a levee system by allowing excess flood water to escape into bypasses or designated drainage basins when river stages begin rising to threatening levels. Fixed weirs allow no discharge to occur until the water level exceeds the weir crest. Fixed weirs are usually built of reinforced concrete, but they may also be built of stone, quarry rock, cobbles, or other suitable material. 4.61

Maintenance of fixed weirs usually requires periodic removal of such obstructions as undesirable vegetation, debris, and silt deposits on the waterward side and clearance of debris from the stilling basin or spillway to permit uniform flow into the escape route. A weir should also be regularly inspected for evidence of spalling or cracking and for exposed reinforcement bars in abutments or wing walls.

Undesirable vegetation should also be removed from the downstream revetment. Where handrails or walkways are present, they should be regularly inspected to ensure that they are safe and meet safety regulations. Where a county or State highway or a railroad is an integral part of the flood control structure, the maintenance responsibilities are defined in a separate agreement with the agency concerned.

Control Weirs. Control weirs serve essentially the same purpose as fixed weirs. That is, they permit excess water to escape into a bypass system when high river stages occur. Control weirs, however, are designed to release additional flows through a series of control gates to reduce the stress on levee systems, when needed. 4.62

Proper operation of control weirs is considered vital to the safety of residential, industrial, and agricultural property near and downstream from the facility. Operational guidelines are dictated by the the Corps of Engineers and must be rigidly adhered to.

Removal or leveling of silt deposits, debris, and undesirable vegetation between the river and the structure are essential maintenance activities. The spillway should also be freed of obstructions and the concrete bulkhead and superstructures kept in good repair. Diagrams and maintenance procedures for the control mechanism and a record of maintenance performed should be filed and made readily available for inspection at the headquarters of the operating and maintaining agency.

Erosion in the discharge area of the control structure can be expected to occur as gates are opened for flood control. Turbulence created by the volume and velocity of water rushing through the aperture may have a scouring effect.

Whenever the gates of the Sacramento Weir are opened, the event must be documented. The gates are opened and closed under the direction of the Flood Center.

Diversion Structures. Fixed controllable diversion structures divert water from the main channel for flood control, irrigation, or other needs. Accumulated silt, gravel, and debris on the upstream side can restrict flows and interfere with the effectiveness of the structure. 4.63

Maintenance involves removing all obstructive materials, including undesirable trees and wild growth, from the upstream and downstream sides of the structure. The condition of the concrete should be periodically noted and appropriate repairs made. The control gate mechanism should be regularly tested and adjusted to ensure proper operation. Special attention must be given to discharge pipes where obstructions could be present but are not readily visible.

Pumping Plants. A pump or a series of pumps with a wide range of capacities is used to draw excess water from drainage systems and discharge it into the main channel. Steel trash racks are installed to protect the pumps by preventing materials large enough to damage them from entering the intake sump. At some stations, a log boom supplements the function of trash racks. 4.64

All trash, including built-up sand and gravel, must be removed from the area of the log boom, the trash rack, and the gravity discharge pipe or channel before the high-water season begins. Just as important, when the pumps are active, debris captured by intercepting structures must be removed, either by hand tools or mechanical means, before the accumulated materials can clog the system.

Wing walls, bulkheads, splash aprons, and the superstructure are made of reinforced concrete that is subject to cracking and spalling and exposure of the reinforcement bars. Repairs should be made as early as possible. 4.64 (Cont.)

A maintenance guide and inspection check list is located inside each control structure. The superintendent should acquaint himself and all authorized maintenance personnel with the operation, housekeeping, and maintenance procedures for the facility.

Outfall Structures. Outfall structures are multipurpose features that are usually situated in a drainage canal or channel near its confluence with a main river. A series of mechanized discharge pipes or slide gates are incorporated into a reinforced concrete barrier that, when closed, prevents flood water in the river from backing up into the drain system. 4.65

The gates can also be operated to maintain desirable levels in the drainage system to meet irrigation needs or to release excess flood water into a bypass system.

Trash gates and/or log booms are positioned on the upstream side of the control gates to prevent debris from fouling their operation. When debris begins to collect in the area, it must be removed immediately. At some facilities, a debris boom is installed for this purpose. Revetment on both sides of the structure should be kept clear of undesirable vegetation and an unobstructed passageway maintained.

The concrete superstructure should be inspected regularly and cracks and spalls patched. The metal works are also subject to some battering, and breaks or distortion can be expected to occur. Such conditions can be corrected by straightening or welding the damaged area. The electrical or hydraulic system should be inspected and tested frequently by a qualified employee.

Bridges and Roads. The superintendent's responsibilities for county or State bridges and roads that cross a federal flood control waterway include inspection, reporting, and maintenance. When a condition is noted that would affect the safety of the structure or the functioning of the flood control works, it should be reported as a matter of courtesy to the agency responsible for it. 4.66

Drop Structures. The purpose of a drop structure is to stabilize a channel by holding flow velocities below the point of scouring. 4.67

Drop structures are built of reinforced concrete, with wing walls, a crest or headwall, a spillway apron-slab, and end sills. Revetted slopes on the upstream and downstream ends are essential parts of the facility. Drop structures with headwalls that extend above the invert of the channel have drain ports to prevent ponding of water on the upstream side of the structure. The ports must be kept free of material that would restrict flows.

General maintenance of a drop structure requires removal of any accumulated trash and debris from the intake area of the facility. Silt and gravel deposits in and about the stilling basin should also be removed after each high-water event. Undesirable growth impairs the chief function of the revetted area. It must be eliminated, either mechanically or by the use of herbicides. 4.67 (Cont.)

The reinforced concrete work should be periodically checked for cracks, spalling, and rebar exposure, and repairs should be made at an early opportunity.

Some drop structures are equipped with a wooden gate or a cable-supported barricade designed to prevent livestock and other animals from falling into the drop basin. These protective devices should be kept in good repair.

Figure 1

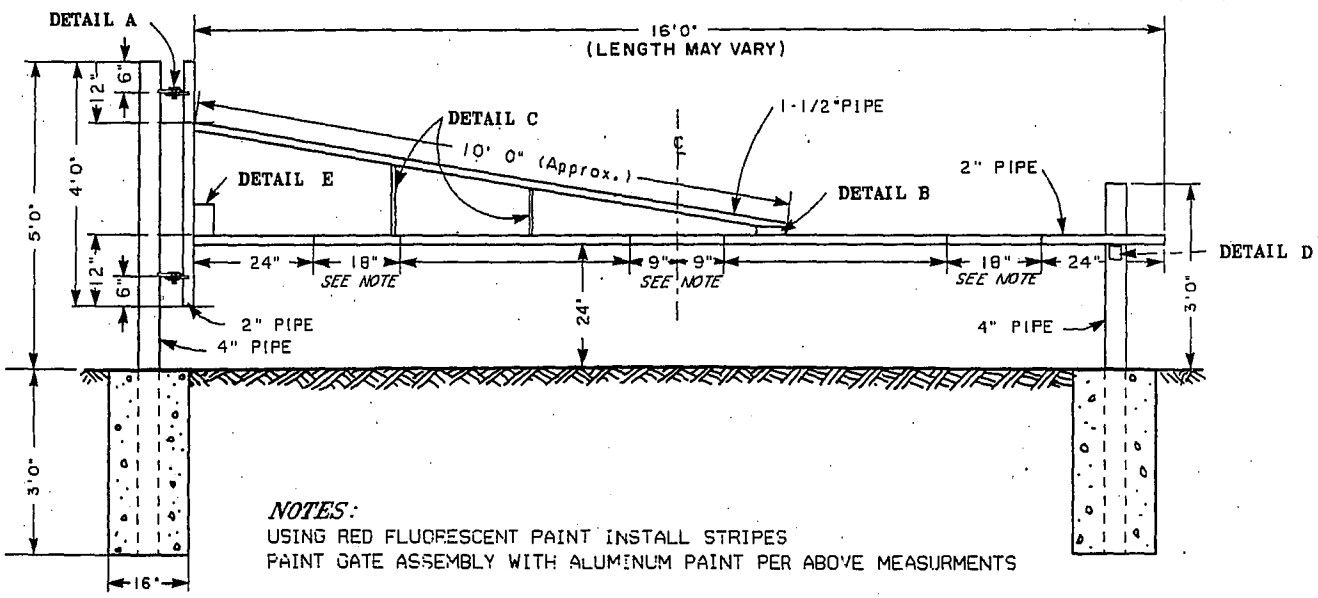

NOTES:
USING RED FLUORESCENT PAINT INSTALL STRIPES
PAINT GATE ASSEMBLY WITH ALUMINUM PAINT PER ABOVE MEASURMENTS

MATERIAL LIST		
ITEM	UNIT	QUANITY
CONCRETE	C.F.	8
4" STEEL PIPE	L.F.	14
2" STEEL PIPE	L.F.	20
1-1/2" STEEL PIPE	L.F.	10
GATE HINGES	EA.	2
POST HINGES	EA.	1
WEB PLATES	EA.	2
GATE REST	EA.	1
SIGN HOLDER	SET	1
MILE MARKER	EA.	2

MATERIAL LIST		
ITEM	UNIT	QUANITY
0/7 HARDENED CHAIN	L.F.	20
3/4"X2" MACH. BOLT	EA.	2
3/4" NUTS	EA.	2
ROAD CLOSED SIGN	EA.	1
MACH. SCREWS	EA.	4
AMBER REFLECTOR	EA.	2
ALUMINUM PAINT	GAL.	1
3" BRUSHES	EA.	2
FLUORESCENT PAINT	QT.	1
MASKING TAPE	ROLL	1

STANDARD PIPE GATE
MANUFACTURED AND INSTALLED

NO SCALE

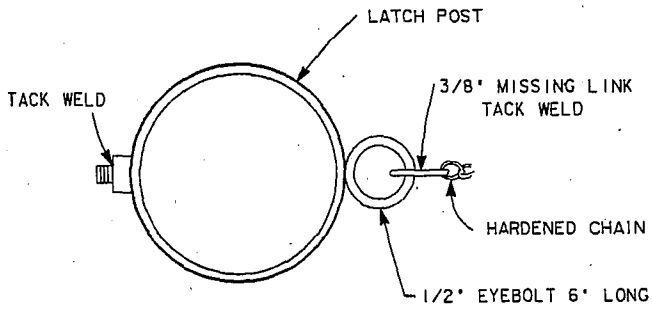

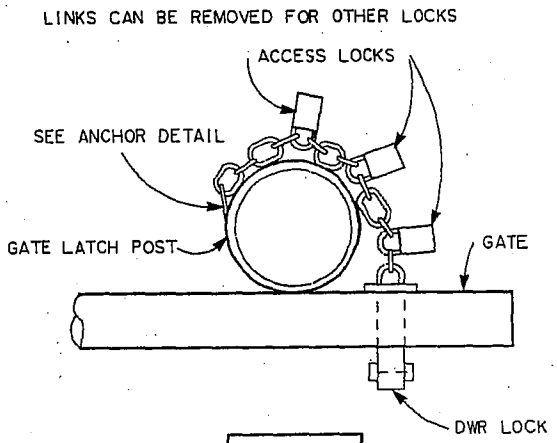

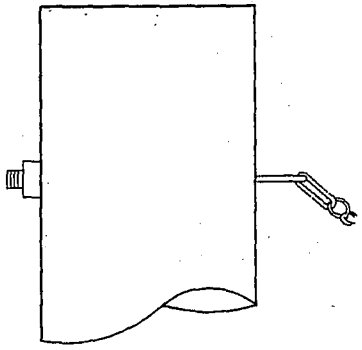

ANCHOR DETAIL
CHAIN ANCHOR TO POST

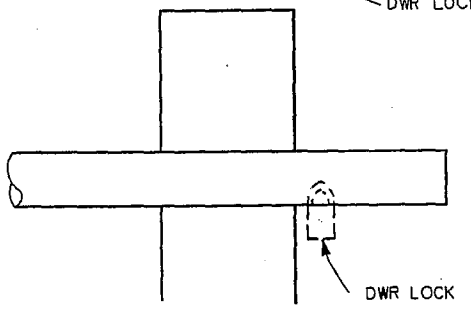

LOCKING DEVICE

LOCKING DEVICE &
ANCHOR DETAIL
NO SCALE

Figure 2

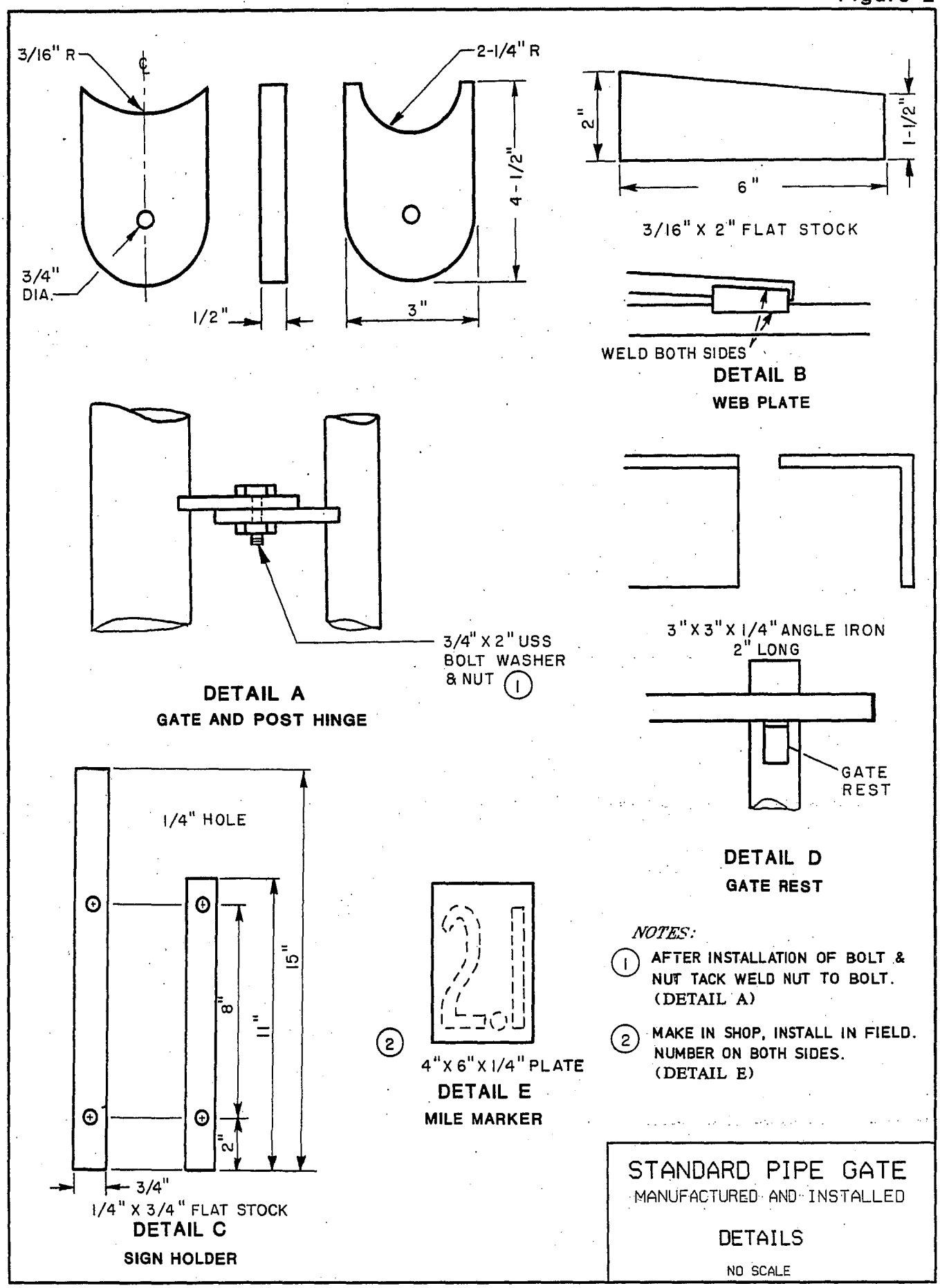
3/16" R
℄
2-1/4" R
3/4" DIA.
1/2"
3"
4-1/2"
2"
1-1/2"
6"
3/16" X 2" FLAT STOCK
WELD BOTH SIDES
DETAIL B
WEB PLATE
3/4" X 2" USS BOLT WASHER & NUT (1)
DETAIL A
GATE AND POST HINGE
3" X 3" X 1/4" ANGLE IRON 2" LONG
GATE REST
DETAIL D
GATE REST
1/4" HOLE
15"
8"
11"
2"
3/4"
1/4" X 3/4" FLAT STOCK
DETAIL C
SIGN HOLDER
(2)
4" X 6" X 1/4" PLATE
DETAIL E
MILE MARKER
NOTES:
(1) AFTER INSTALLATION OF BOLT & NUT TACK WELD NUT TO BOLT. (DETAIL A)
(2) MAKE IN SHOP, INSTALL IN FIELD. NUMBER ON BOTH SIDES. (DETAIL E)
STANDARD PIPE GATE
MANUFACTURED AND INSTALLED
DETAILS
NO SCALE

Figure 3

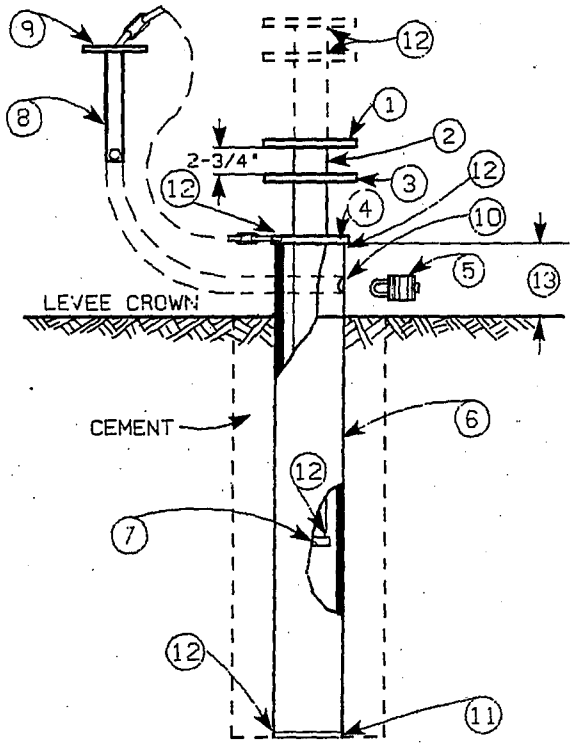

LATCH POST
FOR SPECIAL FARM MACHINE ACCESS
NO SCALE

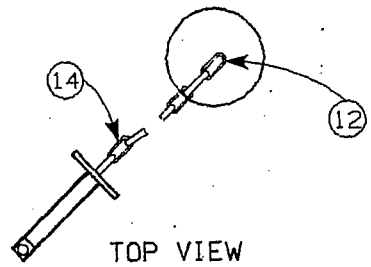

1. ROUND 1/2" PLATE 8 1/2" DIA.
2. PIPE 3" DIA. 22" LENGTH
3. ROUND 1/2" PLATE 8 1/2" DIA. 3 1/2" HOLE CENTERED
4. ROUND 1/2" PLATE 4 1/2" DIA. 3 1/2" HOLE CENTERED
5. AREA LOCK
6. PIPE 4" DIA. 28" LENGTH
7. ROUND 1/2" PLATE 3 1/2" DIA.
8. LOCKING PIN WITH HEAD. 6" X 1" ROUND STOCK 7/8" WASHER HOLE DRILLED IN END FOR LOCK
9. RETAINING CHAIN 10 LINKS
10. HOLE FOR LOCKING PIN
11. ROUND 1/4" PLATE 6" DIA.
12. WELD
13. THIS HEIGHT WILL VARY WITH GATE HEIGHT
14. GATE PIN 10 LINKS OF CHAIN

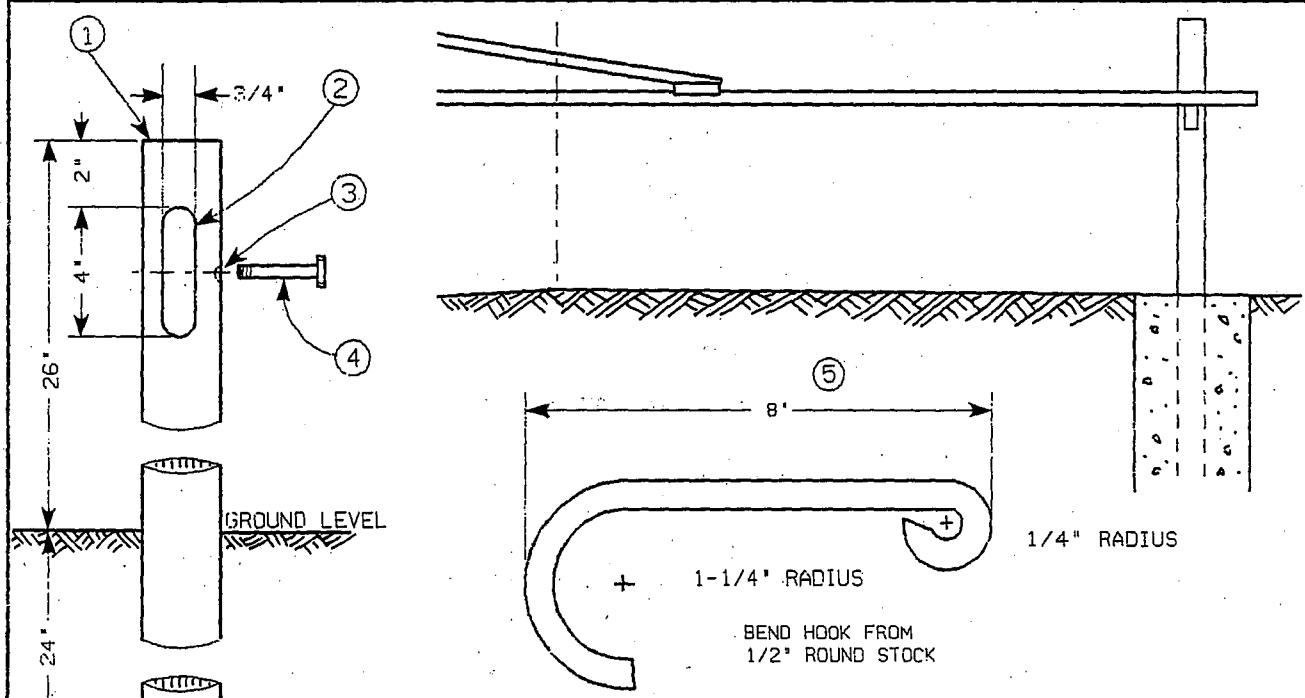

1. 1-1/4" PIPE 54" LONG
2. SLOT CUT THRU PIPE TO RECEIVE HOOK
3. CLEARANCE HOLE FOR 3/8" BOLT
4. 3/8" USS BOLT AND NUT 2-1/2" LONG
5. ROD HOOK

GATE STOP POST
NO SCALE

STANDARD PIPE GATE
MANUFACTURED AND INSTALLED

Figure 4

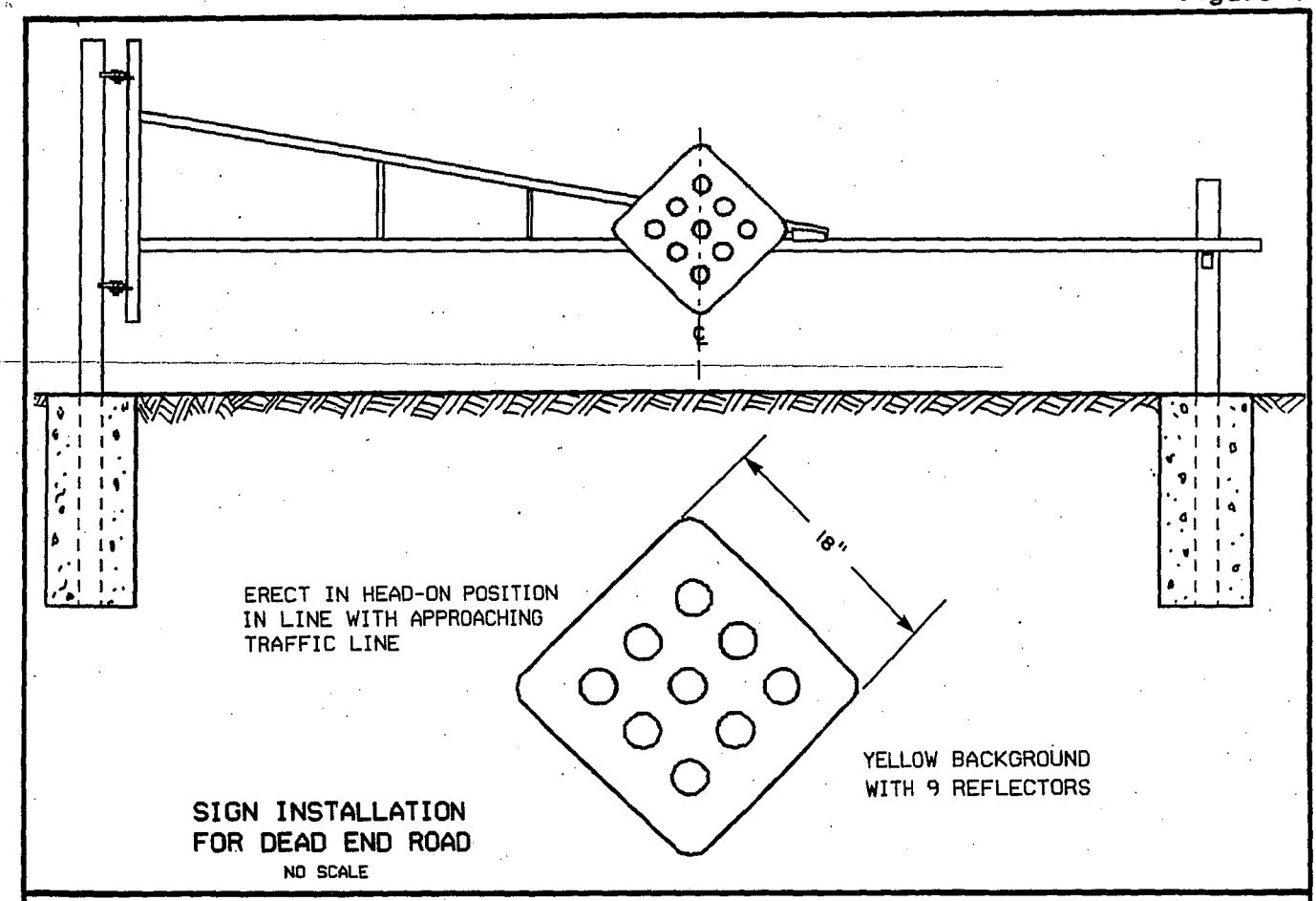

SIGN INSTALLATION
FOR DEAD END ROAD
NO SCALE

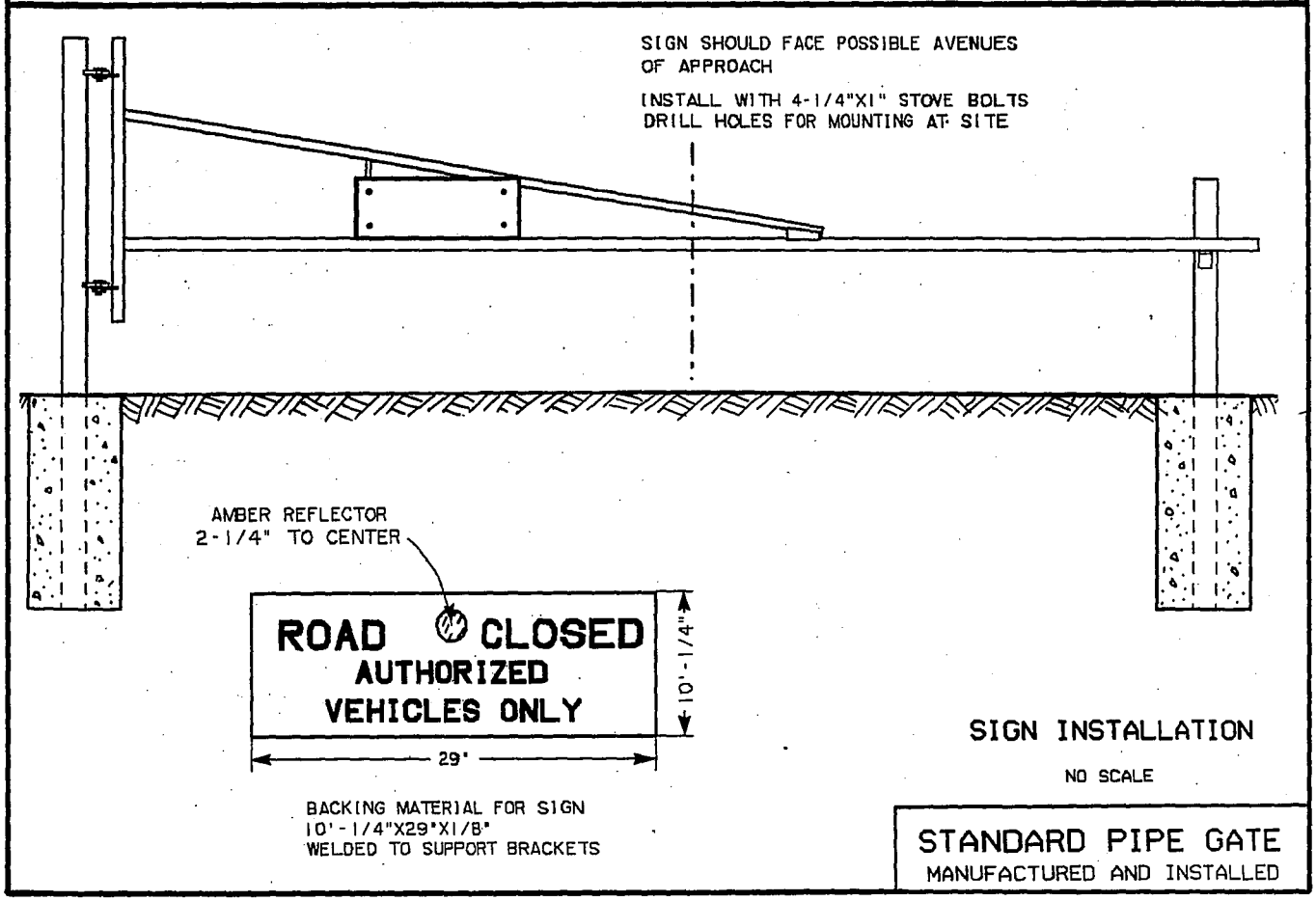

SIGN INSTALLATION
NO SCALE

STANDARD PIPE GATE
MANUFACTURED AND INSTALLED

Figure 5

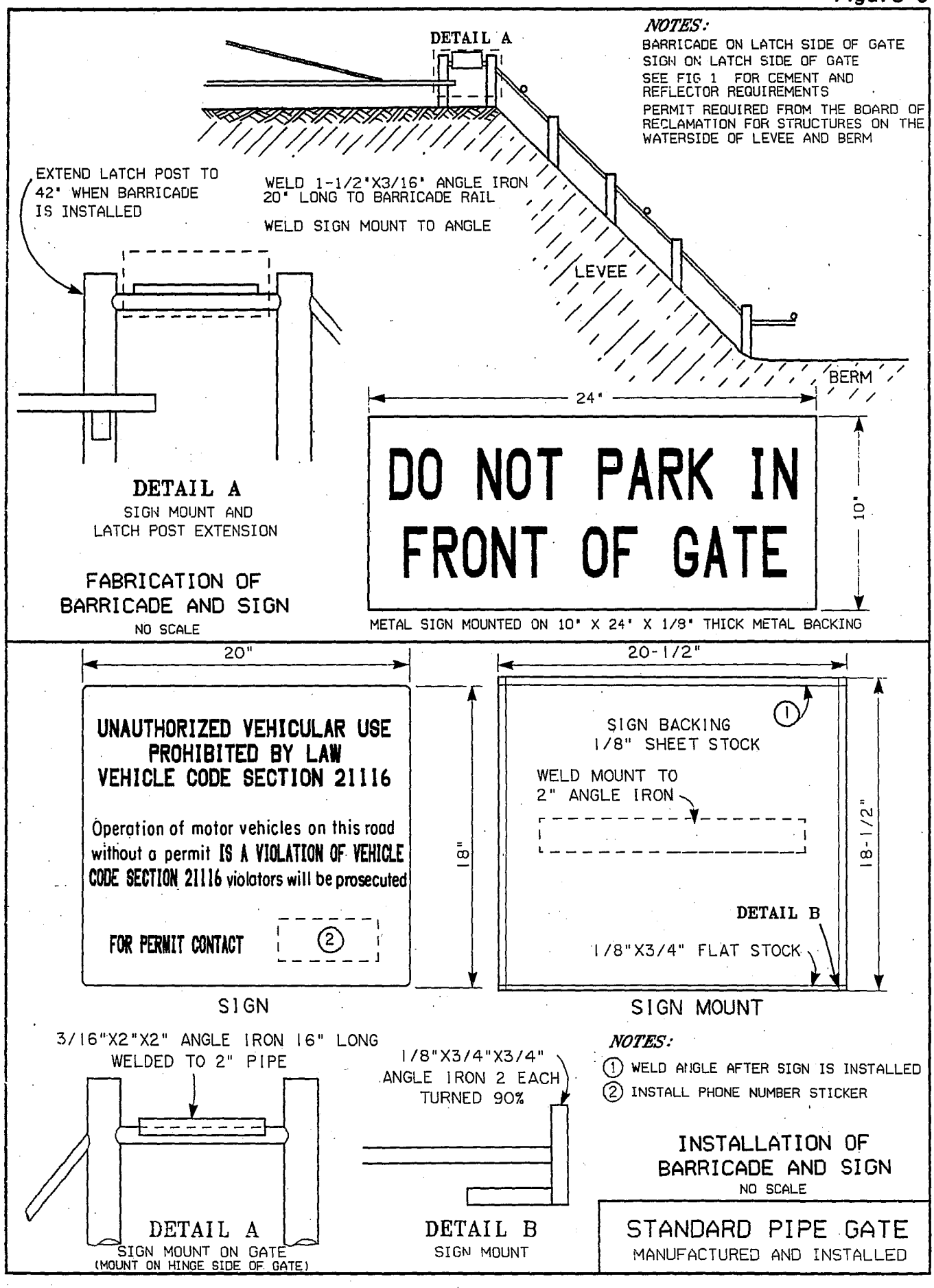
DETAIL A
NOTES:
BARRICADE ON LATCH SIDE OF GATE
SIGN ON LATCH SIDE OF GATE
SEE FIG 1 FOR CEMENT AND REFLECTOR REQUIREMENTS
PERMIT REQUIRED FROM THE BOARD OF RECLAMATION FOR STRUCTURES ON THE WATERSIDE OF LEVEE AND BERM
EXTEND LATCH POST TO 42" WHEN BARRICADE IS INSTALLED
WELD 1-1/2"X3/16" ANGLE IRON 20" LONG TO BARRICADE RAIL
WELD SIGN MOUNT TO ANGLE
LEVEE
BERM
24"
DETAIL A
SIGN MOUNT AND LATCH POST EXTENSION
DO NOT PARK IN FRONT OF GATE
10"
FABRICATION OF BARRICADE AND SIGN
NO SCALE
METAL SIGN MOUNTED ON 10" X 24" X 1/8" THICK METAL BACKING
20"
UNAUTHORIZED VEHICULAR USE PROHIBITED BY LAW VEHICLE CODE SECTION 21116
Operation of motor vehicles on this road without a permit IS A VIOLATION OF VEHICLE CODE SECTION 21116 violators will be prosecuted
FOR PERMIT CONTACT
2
18"
SIGN
20-1/2"
1
SIGN BACKING 1/8" SHEET STOCK
WELD MOUNT TO 2" ANGLE IRON
18-1/2"
DETAIL B
1/8"X3/4" FLAT STOCK
SIGN MOUNT
3/16"X2"X2" ANGLE IRON 16" LONG WELDED TO 2" PIPE
DETAIL A
SIGN MOUNT ON GATE
(MOUNT ON HINGE SIDE OF GATE)
1/8"X3/4"X3/4" ANGLE IRON 2 EACH TURNED 90%
DETAIL B
SIGN MOUNT
NOTES:
1 WELD ANGLE AFTER SIGN IS INSTALLED
2 INSTALL PHONE NUMBER STICKER
INSTALLATION OF BARRICADE AND SIGN
NO SCALE
STANDARD PIPE GATE
MANUFACTURED AND INSTALLED

Figure 6

NO TRESPASSING

UNAUTHORIZED TRESPASSING
IS A VIOLATION OF PENAL
CODE SECTION 602(o)

VIOLATORS WILL BE CITED

STATE OF CALIFORNIA
DEPARTMENT OF WATER RESOURCES

SACRAMENTO BY-PASS
PROPERTY OF
STATE RECLAMATION BOARD

TRESPASSING
OR
LOITERING

IS FORBIDDEN BY LAW
PENAL CODE SECTION 555

FOR INFORMATION CALL

STANDARD PIPE GATE
MANUFACTURED AND INSTALLED

SIGNS IN USE

NO SCALE

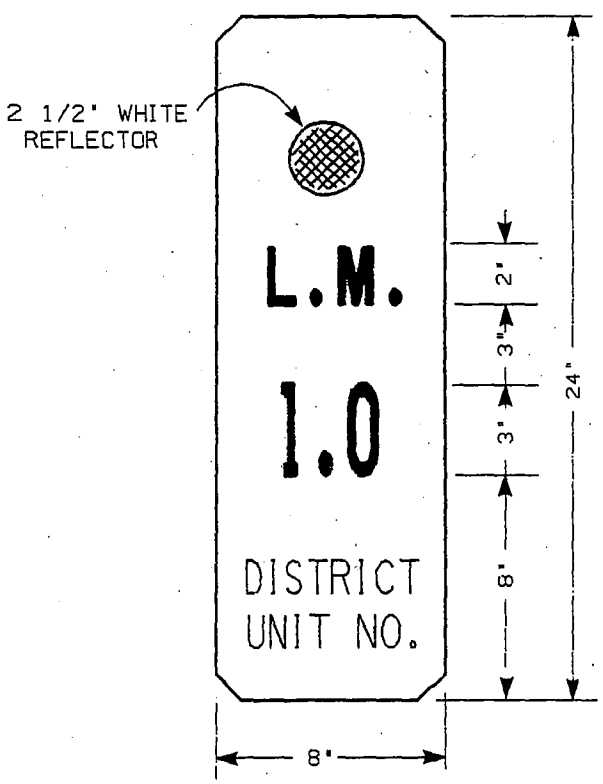

SIGNS TO BE INSTALLED AT 0.5 AND
1.0 MILES WATERWARD LEVEE SHOULDER

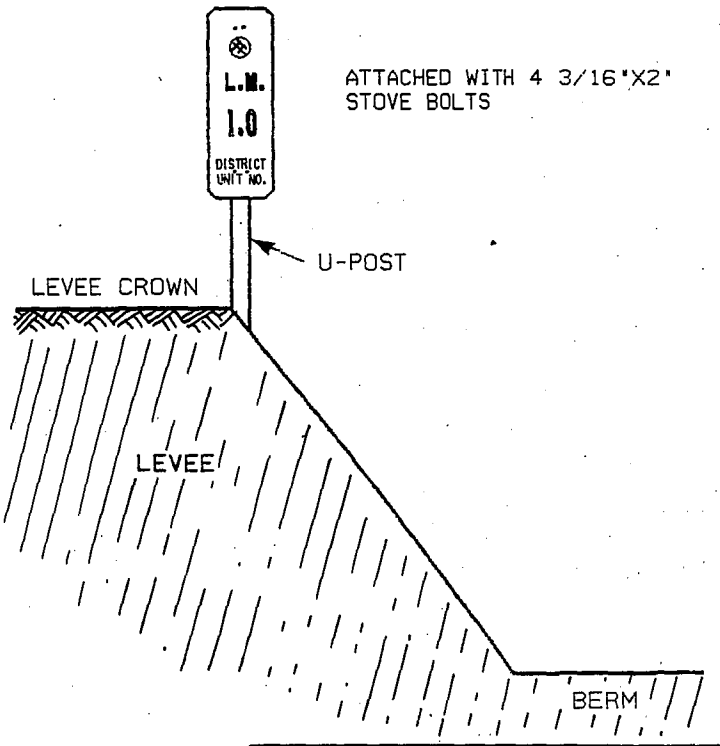

STANDARD
LEVEE MILE MARKER

NO SCALE

MINOR STRUCTURE MAINTENANCE REPORT

CREW

_____

_____

AREA _____

LEVEE OR UNIT _____

DATE	LEVEE MILE	GATES			BARRICADES			SIGNS				MISCELLANEOUS				WORK PERFORMED OR REMARKS
		Pipe Gate	Cable Gate	Other	Pipe Barricade	Cable Barricade	Other	Levee Mile	Trespass	No Parking	Road Closed	Locks	Reflectors	Paint	Chain	

CODE

✓ ACCEPTABLE O MISSING X NEEDS ATTENTION — DOES NOT APPLY

Figure 7

SECTION 5

RODENT CONTROL

Ground squirrels and other burrowing rodents can threaten the structural integrity of levees and other flood control structures. When these animals remove material by burrowing, they reduce the structure's ability to contain flows.

Ground Squirrel Control 5.10

The presence of ground squirrels or their burrows on a levee crown, slope, or toe always warrants control measures. Because of their high reproductive potential and extensive burrow systems, ground squirrels present a serious hazard to levees and, to a lesser extent, to other project facilities. Their burrowing loosens the soil, increasing the risk of erosion and sloughing. Also, a burrow can act like a pipe to carry floodwater into and through levee sections.

Ground squirrel densities tend to be higher where an attractive food source such as walnuts or other seed crops are present.

Rodent Control Techniques 5.20

Areas with high-density ground squirrel populations may require reducing or removing vegetation so that burrow damage can be assessed and control work more easily achieved.

Various rodent control techniques are available. Use of these at at the proper time of the year will increase their effectiveness and minimize certain problems, such as bait shyness, poor control, and nontarget kills.

Timing is critical to the success of any rodent control program. Control efforts should be aimed at achieving at least a 90 percent mortality. Any less than that level is likely to result in a rapid regrowth of the population.

Rodenticides used carelessly are hazardous to people, livestock, and nontarget wildlife. Many rodenticides are restricted use materials that require the applicator to (1) have a permit from the county agricultural commissioner's office; (2) notify the commissioner's office 24 hours in advance of the planned work (by phoning in a Notice of Intent); and (3) either be a certified "qualified applicator" or be able to demonstrate to the commissioner's office possession of a satisfactory level or knowledge of the product to be used.

5.21 Fumigation. Fumigants are toxic gases or materials that, when placed in the burrow, generate a toxic gas. A number of fumigants are available for control of ground squirrels, including carbon monoxide, gas cartridges (smoke bombs), methyl bromide, and aluminum phosphide (Phostoxin).

The most effective times of the year for fumigation are the breeding season, which occurs from February through May, and the fall, after the first rains and before the coldest weather begins. The soil should not be too dry. Soil that is excessively dry is likely to have cracks and other openings that will allow the gas to escape. The squirrels must be active (not hibernating or estivating) and must be in the burrows at the time of fumigation. 5.21 (Cont.)

The general procedure for application is to place the fumigant in the burrow. When aluminum phosphide is being used, it is followed with crumpled sheets of newspaper. The burrow is then sealed with earth. All active burrows should be treated, and all burrows, both active and inactive, should be sealed with earth. Effectiveness for all forms of fumigants can be improved by treating the burrows again in 48 hours.

Bait Stations. Bait stations are effective in eliminating any rodents that remain after fumigation or the use of acute toxicants. Because of the volume of material that bait stations require, this technique should be used exclusively for small, local ground squirrel colonies. 5.22

Bait stations are used only with anticoagulant baits. These may be formulated as loose grain, paraffin bait blocks, or pellets. The functions of the bait station are to protect the bait from moisture and dirt; to confine it to a small area, while giving the target species access to it; and to reduce or eliminate danger to children, pets, and nontarget animals.

To be effective, anticoagulant baits must be placed repeatedly. Bait stations must be serviced regularly and kept full of fresh bait. They should be anchored to the ground or some solid structure to reduce spillage and vandalism. They should also be posted with warning notices that display the name of the toxicant, the concentration being used, and the name and telephone number of the maintaining agency.

Bait stations should not be used in urban areas because of the danger to children and pets and the likelihood of vandalism.

Bait Broadcasting. Bait broadcasting is the technique used to apply acute toxicants, such as zinc phosphide, strychnine, and 1080. Under certain circumstances, anticoagulant baits may also be broadcast. Ground squirrels are excellent foragers. They readily detect and pick up bait that is broadcast at the rate of three to five kernels per square foot. Nontarget animals are far less likely to find the bait. Bait that is distributed more densely or placed in piles may not be taken by squirrels and, because it may be more noticeable, is extremely hazardous to other wildlife, livestock, and humans. 5.23

Bait may be broadcast by hand around each active burrow (spot baiting) or, in high-density areas, may be broadcast in a swath by a mechanical spreader.

Acute toxicants are lethal. Only a single feeding is needed to achieve the desired results. If they are applied repeatedly, bait shyness or poor bait acceptance can result, thereby lowering the mortality rate. 5.23 (Cont.)

When anticoagulant bait is used, the bait must be broadcast regularly (daily or on alternate days) to ensure that the supply will last for several days.

Trapping. Small infestations of ground squirrels or squirrels occupying areas in which it is impractical or unsafe to use fumigants or toxicants may best be controlled with traps. Both live and kill traps may be used. 5.24

Traps should be placed at the burrow entrance, on runways, or in other locations the squirrels frequent. Initially, traps should be placed unset to allow the squirrels to become accustomed to them. After a few days, the traps can be set and baited with grain, nuts, or other foods that attract these animals. Kill traps should be anchored to prevent them from being carried off by predators.

Other Problem Species 5.30

Occasionally other species such as pocket gophers, rats, beaver, or muskrats may present a flood control hazard. The problems they cause tend to be somewhat specialized, and the techniques for combatting them cannot be addressed in a general discussion such as this. If any of these or other animals are suspected of causing damage, the local agricultural commissioner's office should be contacted for assistance.

SECTION 6

EMERGENCY OPERATIONS

Superintendents of State and local agencies responsible for maintenance of federal flood control project facilities are also responsible for flood emergency preparedness. This includes training personnel in flood fighting methods and stocking flood fighting supplies.

Flood Fight Materials & Equipment Recommended for Patrol Vehicles 6.10

Powerful electric lanterns and extra batteries.
Round-point shovels (to drain ponded water on the crown roadway).
Axes or chain saws (for trees and branches that have fallen across the roadway).
A tow chain (to drag debris from the roadway or assist mired flood fight vehicles).
Highway flares (to warn of dangerous road conditions).
A set of battery jumper cables.
Tire chains.
Visquine sheeting.
Sand bags.

(See also "Flood Fight Check List" in Sec. 6.26.)

High-Water Patrolling 6.20

The Corps of Engineers requires that federal flood control project levees be patrolled when river stages exceed warning levels. To comply with the Corps' requirements, the superintendent must prepare a comprehensive patrol schedule with increasing frequency of patrolling as flood waters rise and a plan that provides for a quick emergency response.

Early detection and evaluation of a developing trouble spot is the key to protecting lives and property during high-water periods. Levee patrols are the first line of defense against levee failure at such times. Patrols must be able to deliver a high standard of performance, even when working long hours in hostile weather and under difficult conditions.

The Mobile Patrol Unit 6.21

A mobile patrol unit usually consists of a journeyworker or a supervisor, assisted by an apprentice or temporary employee. One person in each unit is assigned sole responsibility for locating and reporting discrepancies in the patrol area. The two-person crew is ideal if enough workers are available. A second person means an extra pair of eyes, as well as an extra margin of safety in often dangerous situations.

A mobile patrol uses a pickup truck rigged with a lighting system powerful enough to illuminate levee slopes during darkness. Each unit should be equipped with an installed or portable two-way radio. Because a patrol's primary responsibility is surveillance, it does not normally interrupt this function, except to evaluate and mark trouble spots. 6.21 (Cont.)

Emergencies can develop suddenly, however, that may require the patrol's immediate response. For that reason, it is recommended that patrol vehicles also carry basic emergency flood fighting equipment and materials listed in Sec. 6.10.

Selecting a Sector Boss 6.22

It is a good policy, before the flood season starts, to appoint a qualified employee as sector boss of a specific sector for each 12-hour shift. The sector boss' prime responsibility is overseeing patrol operations. He also inspects reported trouble spots and recommends corrective actions, as needed. To carry out his duties effectively, the sector boss must be fully aware of all conditions in his sector, including the history of high-water problems.

Patrol Scheduling 6.23

To comply with requirements of the Corps of Engineers for high-water patrolling, the superintendent must prepare a comprehensive patrol schedule and a plan providing for quick emergency response. The schedule should allow for increasingly frequent levee surveillance from warning stage through danger stage.

Patrol schedules should be posted conspicuously at the superintendent's headquarters and a copy sent to the Flood Operations Center in Sacramento.

As a basis for an effective schedule, the superintendent should divide and subdivide his area of responsibility into zones, sectors, and walking patrol stations. The zone concept applies when more than one geographic area is involved.

Quick-Response Plan. Normally, there is ample lead time to meet the Corps of Engineers' patrol requirements when the Joint Federal-State River Forecast Center issues a flood warning bulletin. However, it is sometimes difficult to muster an emergency response crew when a crisis occurs during off hours or on a long holiday weekend. This problem can be partially solved by: 6.231

1. Frequently updating the list of telephone numbers of flood fight personnel.

2. Providing for standby vehicles, equipment, and materials that are ready for immediate use.

3. Requiring key personnel to notify their headquarters office where they can be reached in the event an emergency develops while they are out of their usual areas.

Patrol Operations 6.24

Mobile Patrols. Before leaving headquarters to patrol, a unit is given updated forecasts for tide, weather, and river stages; current and proposed changes in reservoir releases; and the radio call number and location of other units in the area. 6.241

Units should be limited to a levee reach that allows them to check both waterside and landside thoroughly at intervals of no more than one hour. As more patrols are added, inspections should be no more than one half hour apart at normal patrol speed.

The terminal point of each mobile patrol district should be clearly marked, preferably by metal posts and plates. When the point has been set, space for vehicle turn-around should be provided.

Walking Patrols. When water levels rise to near flood stage or reach flood stage, patrolling on foot may become necessary, particularly in areas with a history of high-water problems. As a rule, the current or forecast river stage dictates the extent of patrol coverage. However, wind speed and direction frequently have a profound effect on levee stability, and the superintendent must take these factors into consideration. 6.242

Each patrol is given a specific area of responsibility and given empty sandbags, stakes, and shovels. The patrols report trouble spots to a sector boss or mobile patrol unit in the area. Because a foot patrol is assigned to cover a smaller area, it can provide more thorough and more frequent surveillance.

Potential or developing trouble spots will need special attention, particularly during long periods of intense rain.

Walking patrol assignments are identified by placing colored flags or other marker on the levee shoulder. The beat covered by a walking patrol should be changed as conditions change.

Reporting Trouble Spots 6.25

As soon as a potentially hazardous condition is discovered by a patrol unit or is brought to the patrol's attention, the patrol marks the location by driving a 4-foot lath into the levee shoulder near the site. The patrol then reports the location, nature, and extent of the problem. The leadman also classifies the problem as needing immediate action or only surveillance. When warranted, an identification number assigned by the command center is attached to the stake, along with other essential information. The stake should be flagged with fluorescent material so it will be visible to patrols working during darkness.

Before relief patrols go on duty, they should be fully briefed on the current status of staked trouble spots and other problems in their assigned areas.

Flood Fight Check List

An ample supply of the following tools, materials, and equipment should be readily available in a convenient location. These supplies should be regularly inventoried and re-stocked.

The inventory should be adjusted according to length of patrol area, number and type of flood control facilities, and experience during other flood events.

Local agencies might also consider stocking foul weather gear, including extra sets in various sizes.

Items	Quantity (Minimum required)
Visquine plastic sheeting, 10 mil, 100 x 20 feet	2 rolls
OR	
Canvas, 100 x 20 feet	2 rolls
Sandbags	1,000
Twine or baling wire	One box
Stakes, 2-foot, 2" x 4", W/V points	50
Laths, 4-foot	One bundle
Tie buttons or stones	50
Flagging, fluorescent	6 rolls
Lineman's pliers	4
Sledge hammers	2
Shovels	5
Life jackets	4
Logbook (to document trouble spots)	
Tire chains	Quantities As Needed
Jumper cables	
Highway flares	
Tow chains	
Axes	
Chain saws	
Electric lanterns	
Batteries for lanterns	
Maps	
Lighting system for night patrol	
Two-way car radio or car telephone	

Asking For Help

6.30

When a flood disaster is impending, local and State agencies must fully expend their resources to prevent loss of life and property damage. If an emergency exceeds the capabilities of local and State agencies, aid is available from federal agencies.

During a Flood Emergency

6.31

When flood water reaches the danger level or when other serious problems develop, the superintendent may ask for additional aid from the DWR Flood Operations Center in Sacramento to extend patrol coverage or to engage in a flood fight. The Center is staffed on a 24-hour basis during flood alerts and responds to requests for personnel, material, and equipment for flood fighting. The Center also provides engineering and consultation services for damage appraisal or evaluation during flooding.

If a flood control structure is in immediate danger of failing and the situation is more than a local agency can handle, the local superintendent should report the situation to the DWR Chief of Flood Operations in Sacramento at 800-952-5530 or 916-445-3553.

If a DWR representative confirms that conditions also exceed the capabilities of the State's forces, the Director of the Department of Water Resources calls on the Corps of Engineers for assistance.

In time of flooding or coastal storms, the Corps of Engineers can also undertake emergency operations to supplement local disaster assistance, flood fighting, and disaster recovery and rehabilitation. State or local agencies cannot be reimbursed for expenses they have incurred.

After the Flood Emergency Has Ended

6.32

The State Natural Disaster Assistance Act (NDAA) provides for financial aid to State and local agencies to replace or repair public property destroyed or damaged by a natural disaster. Such aid, which is provided on a cost-sharing basis, is not available until the Governor has declared a state of emergency exists. Facilities used solely for recreation are excluded from such assistance.

NDAA is administered by the Director of the Office of Emergency Services (OES), who may delegate any power or duty invested in him to another State agency.

A local agency may be eligible for NDAA financial aid after it has met the following conditions:

(1) It has declared a local state of emergency exists and has asked the Director of OES to concur.

(2) It submits a formal application for assistance to the Director of OES.

(3) The application includes a preliminary assessment of costs of repair or replacement.

Delegated State agencies examine the region involved and submit reports supporting the request to OES. To qualify for NDAA assistance, the declaration of a local emergency must have been made within 10 days of the occurrence of the emergency (following a declaration of emergency by the Governor. 6.32 (Cont.)

All applications must be filed within 30 days of the local emergency declaration with the Office of Emergency Services, 2800 Meadowview Road, Sacramento CA 95832.

Public Law 84-99. This law authorizes the Corps of Engineers, when requested by the Governor or his authorized representative, to assist the State in a flood fight when high-water damage or failure of a federal or nonfederal flood control facility could cause loss of life or property damage. To invoke this law, however, State and local agencies must first expend maximum effort. 6.321

Following emergency operations, the Corps of Engineers, under PL 84-99 (as amended), can give additional help for 10 days.

Conditions governing participation by the Corps of Engineers for advance measures and emergency operations are outlined in the Corps' handbook, Emergency Operations.

(The form for requesting aid under PL 84-99 follows this section.)

Federal Emergency Management Agency (FEMA). Historically, the American Red Cross, the Salvation Army, church groups, and other nonprofit humanitarian organizations are first at the scene to meet the immediate needs of victims of natural disasters. A wide range of assistance is also available through FEMA before a presidential declaration of disaster. However, FEMA will not participate in post-flood repair of federally constructed flood control projects. 6.322

Following a presidential declaration, public facilities and private property damaged in a disaster are eligible for federal assistance on a conditional and sliding scale basis. This aid is granted to restore properties to predisaster condition. Applications for assistance must be filed with the Office of Emergency Services no more than 30 days following the presidential declaration. (See the OES Disaster Assistance Procedures Manual, 1985.)

CLOW

Clow Valve Co.

902 South 2nd Street
Oskaloosa, IA 52577

Telephone: 641 673-8611
Fax: 641 673-8269

14" - 48" RESILIENT SEAT GATE VALVE
WITH ROTORK/EXEECO GEARING

O & M Manual

TABLE OF CONTENTS

Page 1 General Info/Installation Instructions

2-3 Operation/Inspection & Maintenance

4 Records

5 RW GV 14"-20" With Bevel Gear/Parts List
Recommended Spare Parts

6 RW GV 14"-20" With Spur Gear/Parts List
Recommended Spare Parts

7 RW GV 24" With Bevel Gear/Parts List
Recommended Spare Parts

8 RW GV 24" With Spur Gear/Parts List
Recommended Spare Parts

9 14"-24" RW GV Geared Valve Disassembly

10-11 RW GV 30-48" With Bevel Gear Assembly

12 30"-48" With Bevel Gear / Parts List
Recommended Spare Parts

13-14 RW GV 30"-48" With Spur Gear Assembly

15 30"-48" With Spur Gear /Parts List
Recommended Spare Parts

16 30"-48" RW GV Disassembly

17 Troubleshooting

18-22 Rotork/Exeeco Bevel Gear
19 Bevel Range Specification
20 Installation, Operation & Maintenance Instructions
21 Assembly & Dismantling Instructions
22 Spare Parts List & Recommended 5 Years Holding List
23-27 Rotork/Exeeco Spur Gear
24 Spur Gear Range Specification
25 Installation, Operating and Maintenance Instructions
26 Assembly & Dismantling Instructions
27 Spare Parts List and Recommended 5 Years Holding List

CLOW

Clow Valve Co.

902 South 2nd Street
Oskaloosa, IA 52577

Telephone: 641 673-8611
Fax: 641 673-8269

INSTALLATION, OPERATION AND MAINTENANCE MANUAL

RESILIENT SEAT GATE VALVE

GENERAL; *Inspect all valves at time of delivery for shipping damage and to confirm compliance with specifications. Valves are completely tested per the appropriate standards and specifications by the manufacturer. The valves should be stored in such a manner to protect them from weather and blowing dirt and debris. In cold climates, if water is allowed to freeze in the valve, severe damage to the valve components could result. Any packaging should be replaced if removed for inspection. Proper slinging and handling methods should be used when moving valves. Do not place slings or other devices around operating stem or through the valve port opening.*

I. Installation

1. *Check that valve end joints are clean. Again check for damage to the valve. Open and close valve to insure proper operation. Close wedge before placing valve in trench or line.*

2. *Handle valve carefully. Do not drop into position. Do not sling through the port opening.*

3. *Prepare pipe ends according to manufacturer's instructions. Install valve per proper methods according to end joint type. All piping should be properly supported to avoid line stress on the valve. Do not use the valve as a jack to force a pipeline into position.*

4. *A valve box or vault should be provided for each valve used in buried service application. These should be installed such that no load is transferred to the valve.*

5. *Before pressurization of the pipeline and valve, all pressure containing bolting (cover, follower plate, end connection) should be inspected for adequate tightness (usually 90 ft. lb.).*

6. *Buried valves should be pressurized before backfilling.*

7. *With valve in open position, the entire system should be thoroughly flushed to clean the system. Debris in the valve could prevent valve from closing or possibly damage the resilient material on the wedge.*

8. *Upon completion of the installation, gate valve location, size, type, date of installation, number of turns to open, direction of opening, and any other special information should be entered on permanent records.*

II. Operation

1. *Do not operate valves in systems that exceed the rated working pressure of the valve, (14"-48" 250 psi).*

   System should be completely flushed before valve is operated in normal cycle.

2. *The R/W valve opens and closes by turning the main valve stem with an operating nut or handwheel. The valve closes by compressing the resilient material bonded to the wedge against the valve body. As the material is being compressed (at end of closing cycle) torque requirements will approach maximum. Opening the valve requires significantly less torque.*

3. *If the valve should fail to seal after necessary number of turns, open the valve four or five times and reseat.*

   Emergency Operation;

   Turn the handwheel of operating nut faster in the desired direction.

III. Inspection and Maintenance

1. *Frequency of inspection should be based on frequency of operation. Semi annual inspections are minimum recommended. Valves should not be disassembled unless a breakdown has occurred.*

2. *During inspection, the valve should be opened and closed with pressure in the pipeline. The valve should function freely with no binding or vibration. Count the number of turns to full closed, this will reveal an obstruction if correct number of turns are not achieved. See table;*

TURNS TO OPEN

14"	52	with spur gear - 104	with bevel gear - 104
16"	52	with spur gear - 104	with bevel gear - 104
18"	64	with spur gear - 192	with bevel gear - 192
20"	64	with spur gear - 192	with bevel gear - 192
24"	76	with spur gear - 228	with bevel gear - 228
30"	98	with spur gear - 588	with bevel gear - 588
36"	114	with spur gear - 684	with bevel gear - 684
42"	100	with spur gear- 800	with bevel gear - 800
48"	100	with spur gear - 800	with bevel gear - 800

3. *All gaskets and joints should be checked for leakage and tightness.*

4. *With the valve closed and pressure against the disc, a check for leakage Is possible by "listening" to the valve for flow. A stethescope will help in this procedure.*

5. *Attached actuators should be inspected per manufacturer's recommendations provided with those units.*

6. *OS&Y valves should have the exposed stem lubricated at each inspection. Check stuffing box bolts for tightness.*

7. *A permanent inspection record should be kept for each valve.*

RECORDS

1. Trouble can be anticipated with a good Inspection Program. Such a program can not exist without good records. Poor records are worse than none.

2. A printed 5 x 8 record card for each valve and hydrant in the system is most convenient.

   a. Identification of each valve and hydrant is essential. Setting up a numbering system is one of the first steps to take. A reasonably simple method is to assign a number to each street intersection, then identify each valve of hydrant numerically or alphabetically between intersection numbers.
   For instance; I9-I10, would be the number of second valve from street intersection number 9 in going toward street number 10.

   Another convenient device is to assign only odd numbers to existing hydrants. When hydrants are added later they can be giving numbers which will fit in the numerical sequence.

   b. Location should be recorded first. Measurements must be made from property lines or street center lines – not power poles fence lines - or the like.

VALVE RECORD

No._____

Location _____FT._____of_____Prop. Line of_____
And_____ FT._____of_____Prop. Line of_____
Size_____Make_____Type_____ Gearing_____Bypass_____
Opens_____Turns to Operate_____Depth of Nut_____
Remarks_____

Maintenance & Inspection Record

Date	Work Done	O.K.	By	Date	Work Done	O.K.	By

Complies with
AWWA C515

14"-20" R/W VALVE
BEVEL GEAR MATERIAL LIST

CLOW VALVE COMPANY

MODEL 2638

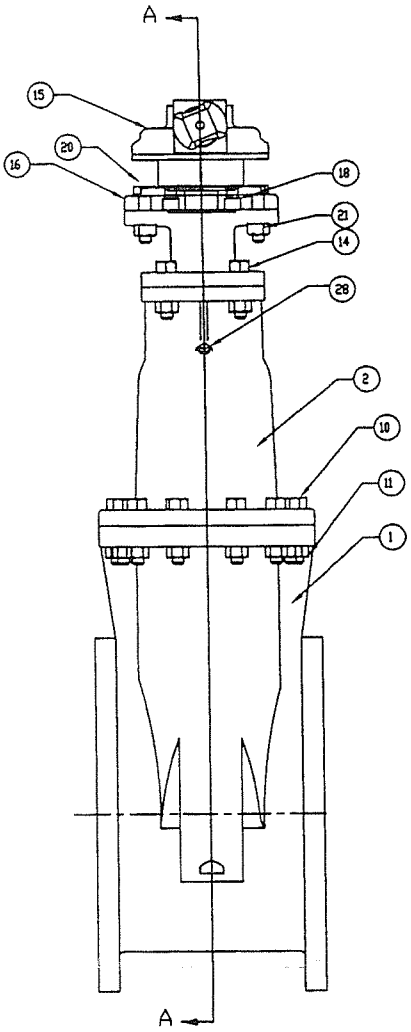

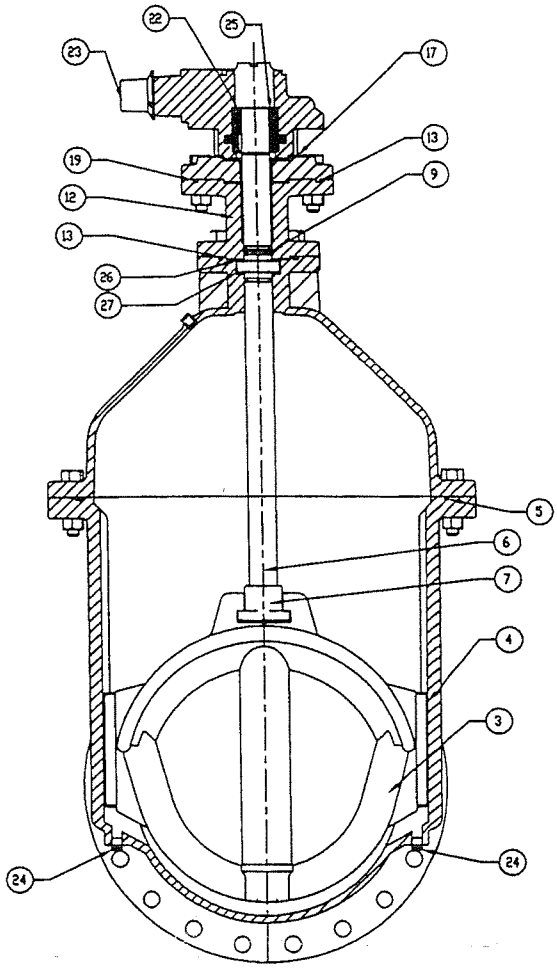

	ITEM NO.	DESCRIPTION	MATERIAL	MATERIAL SPECIFICATION
	1	Body	Ductile Iron	ASTM A536 65-45-12
	2	Cover	Ductile Iron	ASTM A536 65-45-12
	3	Wedge	Ductile Iron/Rubber	ASTM A536 65-45-12/EPDM
	4	Wedge Cap (18"-20" only)	Delrin	Delrin
**	5	Oring	Rubber	EPDM
	6	Stem	Brass	ASTM B584 C86700
	7	Stem Nut	Brass	ASTM B584 C86700
**	9	Oring	Rubber	EPDM
	10	Hex Head Bolt	Stainless Steel	ASTM F593 304 SST
	11	Hex Nut	Stainless Steel	ASTM F594 304 SST
	12	Extension	Ductile Iron	ASTM A536 65-45-12
**	13	Oring	Rubber	EPDM
	14	Hex Head Bolt	Stainless Steel	ASTM F593 304 SST
	15	Actuator - 3:1 (18-20") 2:1 (14-16")		
	16	Adaptor Plate	Ductile Iron	ASTM A536 65-45-12
	17	Actuator Gasket	Rubber	NBR
	18	Socket Head Bolt	Alloy Steel	Alloy Steel
**	19	Oring	Rubber	EPDM
	20	Hex Bolt	Stainless Steel	ASTM F593 304 SST
	21	Hex Nut	Stainless Steel	ASTM F594 304 SST
	22	Key	Steel	----------
	23	Op Nut	Ductile Iron	ASTM A536 65-45-12
	24	Pipe Plug - 3/4 NPT with square hd	Stainless Steel	AISI 304
	25	Drive Sleeve	Steel	AISI 1023
	26	Thrust Bearing	Delrin	----------
	27	Thrust Bearing (18"-20" only)	Delrin	----------
	28	Pipe Plug - 1/2 NPT with square hd	Stainless Steel	AISI 304

2638-20
F 10/17/06

** RECOMMENDED SPARE PARTS

Complies with
AWWA C515

14"-20" R/W VALVE
SPUR GEAR MATERIAL LIST

CLOW VALVE COMPANY

MODEL 2638

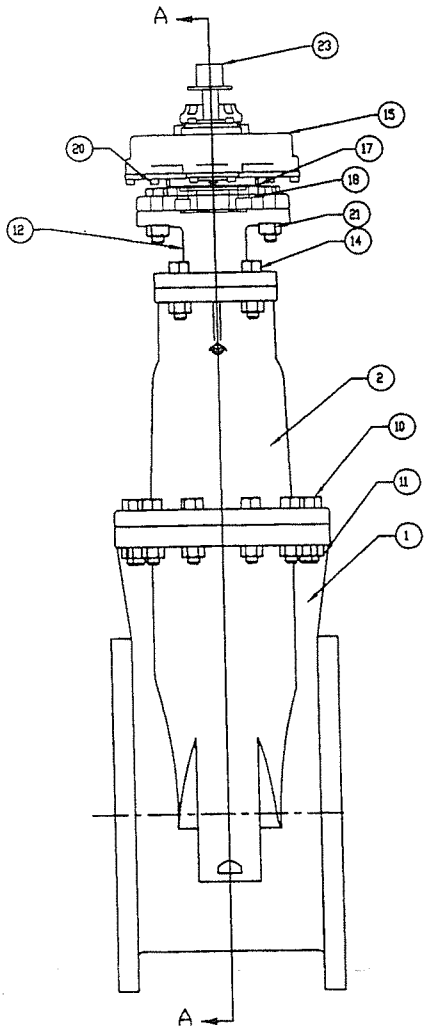

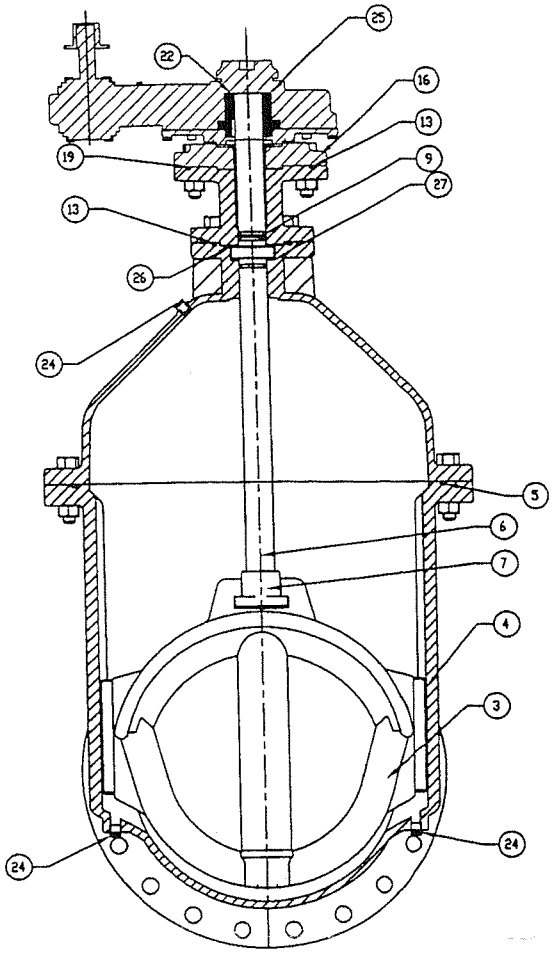

	ITEM NO.	DESCRIPTION	MATERIAL	MATERIAL SPECIFICATION
	1	Body	Ductile Iron	ASTM A536 65-45-12
	2	Cover	Ductile Iron	ASTM A536 65-45-12
	3	Wedge	Ductile Iron/Rubber	ASTM A536 65-45-12/EPDM
	4	Wedge Cap (18"-24" only)	Delrin	Delrin
**	5	Oring	Rubber	EPDM
	6	Stem	Bronze	ASTM B584 C86700
	7	Stem Nut	Bronze	ASTM B584 C86700
**	9	Oring	Rubber	EPDM
	10	Hex Head Bolt	Stainless Steel	ASTM F593 304 SST
	11	Hex Nut	Stainless Steel	ASTM F594 304 SST
	12	Extension	Ductile Iron	ASTM A536 65-45-12
**	13	Oring	Rubber	EPDM
	14	Hex Head Bolt	Stainless Steel	ASTM F593 304 SST
	15	Actuator - 3:1 (18-24") 2:1 (14-16")		
	16	Adaptor Plate	Ductile Iron	ASTM A536 65-45-12
	17	Actuator Gasket	Rubber	NBR
	18	Socket Head Bolt	Alloy Steel	Alloy Steel
**	19	Oring	Rubber	EPDM
	20	Hex Bolt	Stainless Steel	ASTM F593 304 SST
	21	Hex Nut	Stainless Steel	ASTM F594 304 SST
	22	Key	Steel	----------
	23	Op Nut	Ductile Iron	ASTM A536 65-45-12
	24	Pipe Plug - 3/4 NPT with square hd	Stainless Steel	AISI 304
	25	Drive Sleeve	Steel	AISI 1023
	26	Thrust Bearing	Delrin	----------
	27	Thrust Bearing (18"-20" only)	Delrin	----------

2638-27
C 07-19-05

**RECOMMENDED SPARE PARTS

2638-84
D 1/09

24" R/W RTS Bevel Gear Parts List

CLOW VALVE COMPANY

MODEL 2638

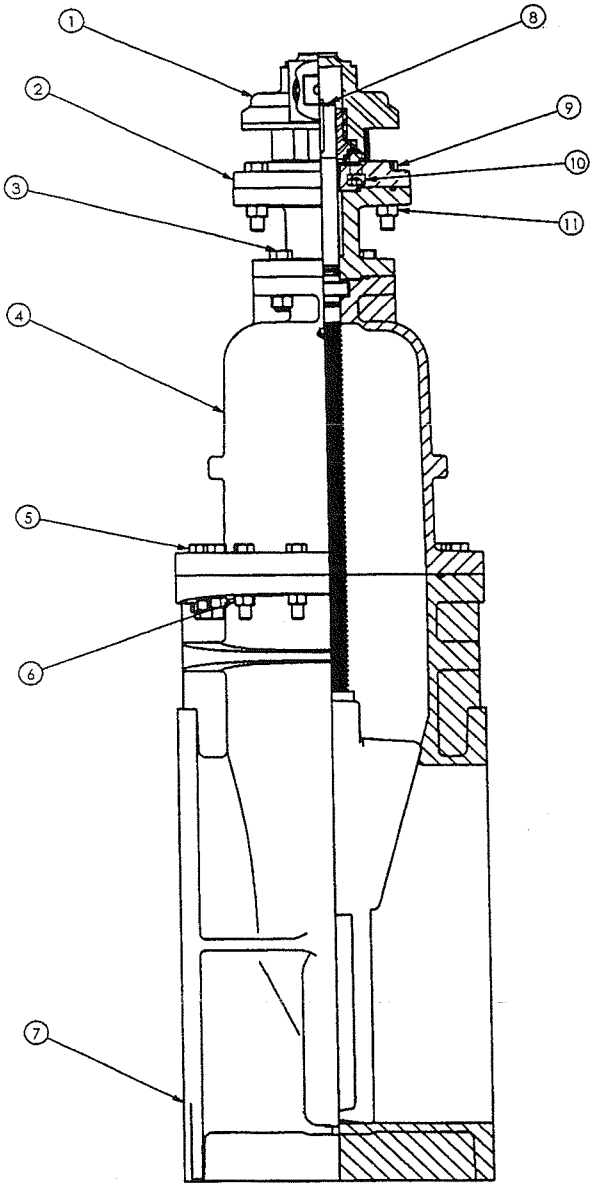

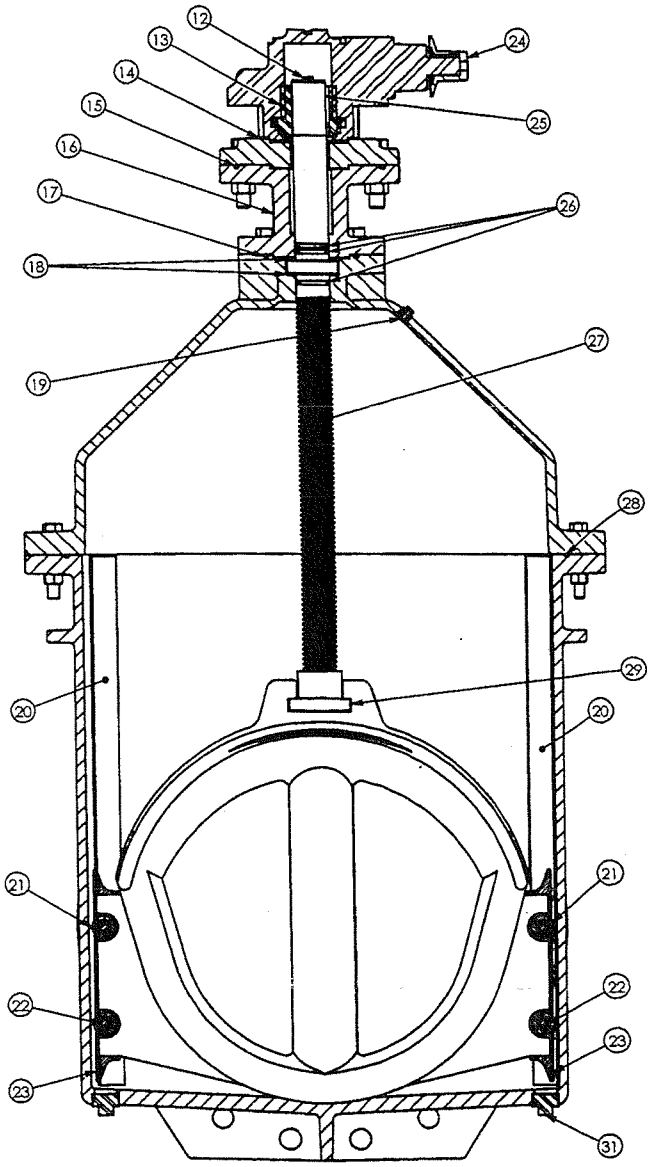

ITEM NO.	DESCRIPTION	MATERIAL	MATERIAL SPECIFICATIONS
1	Exeeco IB7.3:1 Actuator	-	-
2	Adaptor Plate	Ductile Iron	ASTM A536 65-45-12
3	Hex Head Bolt	Stainless Steel	ASTM F593 304
4	Cover	Ductile Iron	ASTM A536 65-45-12
5	Hex Head Bolt	Stainless Steel	ASTM F593 304
6	Hex Nut	Stainless Steel	ASTM F594 304
7	Body - Flange	Ductile Iron	ASTM A536 65-45-12
8	Washer	Steel	-
9	Head Hegd Bolt	Stainless Steel	ASTM F593 304
10	Socket Head Bolt	Stainless Steel	ASTM F593 304
11	Hex Nut	Stainless Steel	ASTM F594 304
12	Hex Head Bolt	Stainless Steel	ASTM F593 304
13	Drive Sleeve	Steel	AISI 1023
14	Actuator Gasket	Rubber	Buna N
15	O-Ring	Rubber	EPDM
16	Extension	Ductile Iron	ASTM A536 65-45-12
17	O-Ring	Rubber	EPDM

ITEM NO.	DESCRIPTION	MATERIAL	MATERIAL SPECIFICATIONS
18	Thrust Washer	Plastic	Delrin
19	Pipe Plug	Stainless Steel	AISI 304
20	Track	Stainless Steel	AISI 316
21	Roller	Bronze	ASTM B148 C954
22	Pin	Stainless Steel	AISI 303
23	Scraper	Bronze	ASTM B148 C954
24	Op Nut	Ductile Iron	ASTM A536 65-45-12
25	Key	Steel	AISI 1018
26	O-Ring	Rubber	EPDM
27	Stem	Bronze	ASTM B584 C86700
28	O-Ring	Rubber	EPDM
29	Stem Nut	Brass	ASTM B584 C83600
30	Wedge	Ductile Iron / Rubber	ASTM A536 65-45-12 / EPDM
31	Pipe Plug	Stainless Steel	AISI 304

2638-90
D 01/09

24" R/W RTS Spur Gear Parts List

CLOW VALVE COMPANY

MODEL 2638

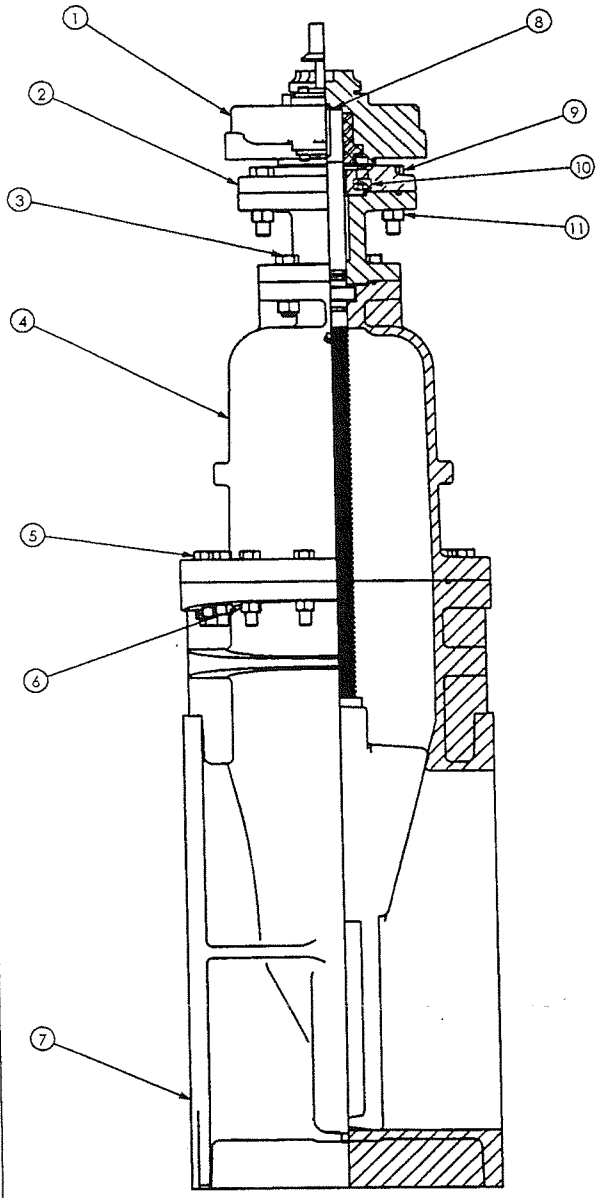

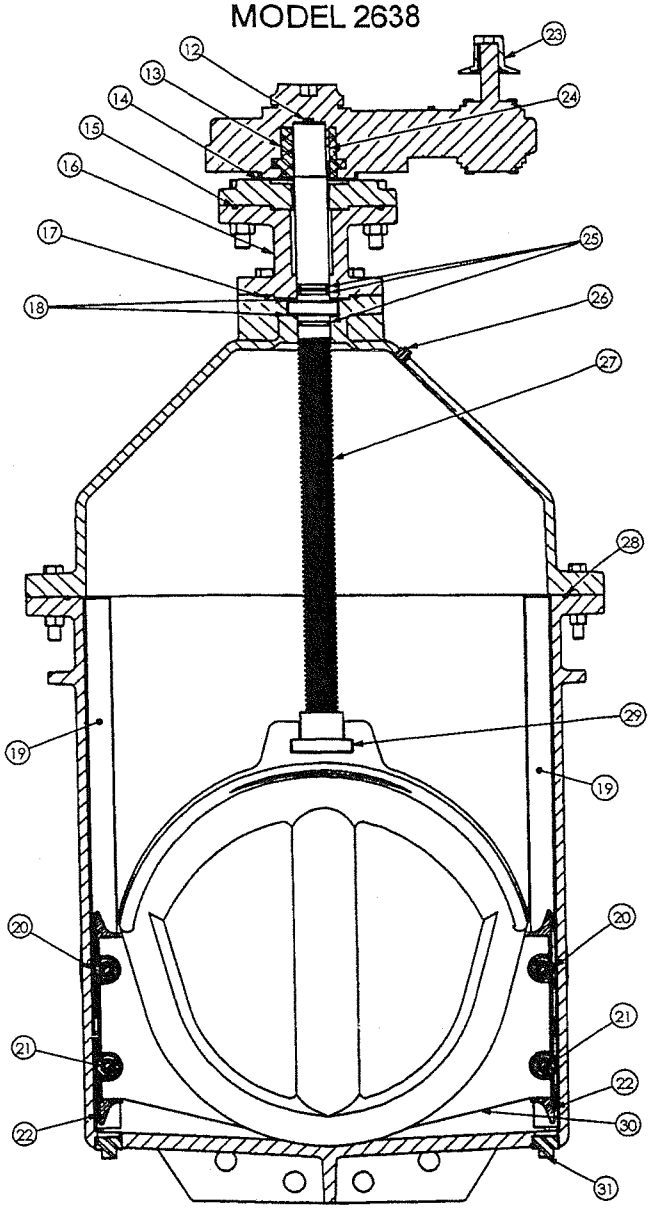

ITEM NO.	DESCRIPTION	MATERIAL	Material Specs
1	Exeeco IS7 3:1 Actuator	-	-
2	Adaptor Plate	Ductile Iron	ASTM A536 65-45-12
3	Hex Head Bolt	Stainless Steel	ASTM F593 304
4	Cover	Ductile Iron	ASTM A536 65-45-12
5	Hex Head Bolt	Stainless Steel	ASTM F593 304
6	Hex Nut	Stainless Steel	ASTM F594 304
7	Body - Flange	Ductile Iron	ASTM A536 65-45-12
8	Washer	Steel	-
9	Head Head Bolt	Stainless Steel	ASTM F593 304
10	Socket Head Bolt	Stainless Steel	ASTM F593 304
11	Hex Nut	Stainless Steel	ASTM F594 304
12	Hex Head Bolt	Stainless Steel	ASTM F593 304
13	Drive Sleeve	Steel	AISI 1023
14	Actuator Gasket	Rubber	Buna N
15	O-Ring	Rubber	EPDM
16	Extension	Ductile Iron	ASTM A536 65-45-12
17	O-Ring	Rubber	EPDM

ITEM NO.	DESCRIPTION	MATERIAL	Material Specs
18	Thrust Washer	Plastic	Delrin
19	Track	Stainless Steel	AISI 316
20	Roller	Bronze	ASTM B148 C954
21	Pin	Stainless Steel	AISI 303
22	Scraper	Bronze	ASTM B148 C954
23	Op Nut	Ductile Iron	ASTM A536 65-45-12
24	Key	Steel	AISI 1018
25	O-Ring	Rubber	EPDM
26	Pipe Plug	Stainless Steel	AISI 304
27	Stem	Bronze	ASTM B584 CB6700
28	O-Ring	Rubber	EPDM
29	Stem Nut	Brass	ASTM B584 CB3600
30	Wedge	Ductile Iron / Rubber	ASTM A536 65-45-12 / EPDM
31	Pipe Plug	Stainless Steel	AISI 304

Dis-assembly Instructions 14"-24" Geared Valve

Ref; 14"-24" RW Valve Material List (page 5 or 6)

1. Remove 3" NPT plug on top of gear.
2. Remove capscrew and large washer under pipe plug.
3. Remove (4)bolts (20) and (4) nuts (21) between adapter plate (16) and extension.
4. Lift off gear assembly (15) and adapter plate (16). Retain key (22).
5. Remove (4) bolts & nuts (14).
6. Lift off extension (12).
7. Remove stem (6) by turning the stem in the opposite direction of opening the valve.
8. Remove neck flange bolts and nuts (10&11).
9. Lift off cover (2).
10. Grasp stem nut (7) and lift out wedge (3). **Note; Threading stem back into stem nut may make removal of wedge easier.**
11. Reassemble in reverse order replacing cover o-ring (5), extension o-ring (13), and adapter plate o-ring (19) if necessary.

Dis-assembly Instructions 24" Geared Valve

Ref: page 7 or 8 (valve material parts list drawing)

1. Remove 3" NPT plug on top of gear.
2. Remove capscrew and large washer under pipe plug.
3. Remove (40 bolts (9) and (4) nuts (11) between adapter plate (2) and extension.
4. Lift off gear assembly (1) and adapter plate (2). Retain key (25).
5. Remove (4) bolts & nuts (3).
6. Lift off extension (16).
7. Remove stem (27) by turning the stem in the opposite direction of opening the valve.
8. Remove neck flange bolts and nuts (5&6).
9. Lift off cover (4).
10. Grasp stem nut (29) and lift out wedge (31). **NOTE; Threading stem back into stem nut may make removal of wedge easier.**
11. Reassemble in reverse order replacing cover o-ring (28), extension o-ring (17), and adapter plate o-ring (15) if necessary.

2638-50
A 9-23-02

30"-48" R/W VALVE
BEVEL GEAR ASSEMBLY

CLOW VALVE COMPANY

MODEL 2638

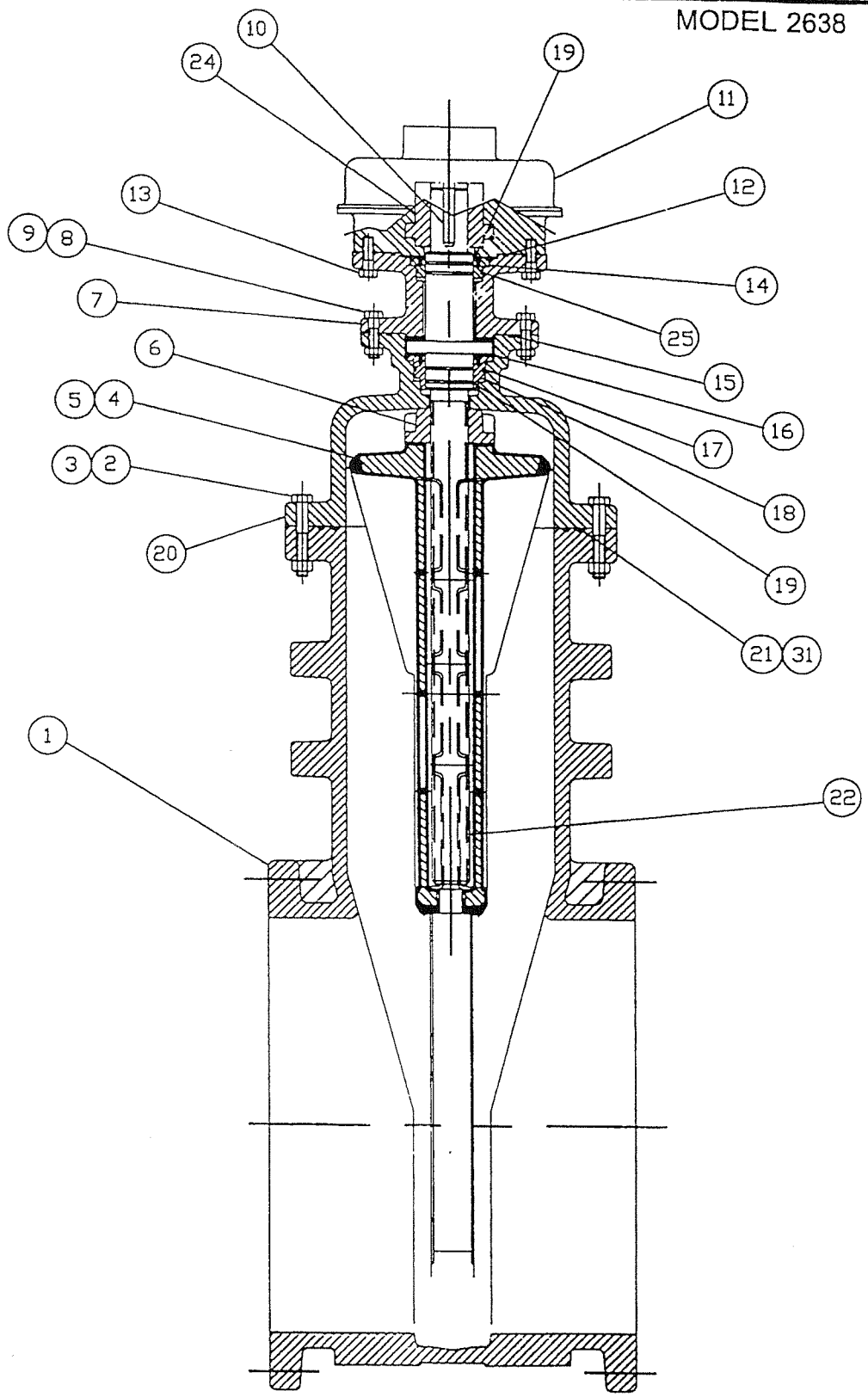

30"-48" R/W VALVE
BEVEL GEAR ASSEMBLY
CLOW VALVE COMPANY
MODEL 2638

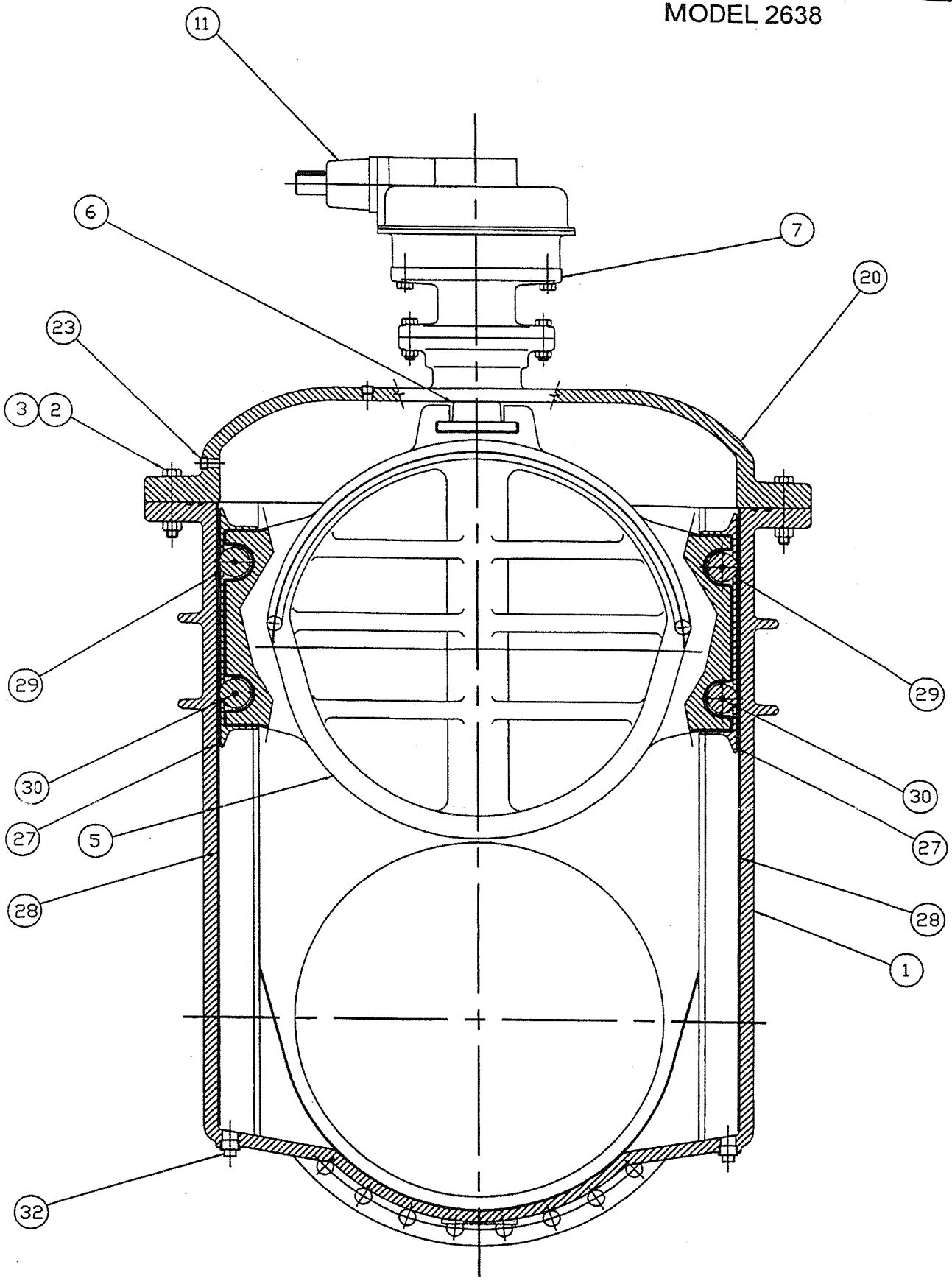

30"-36" R/W VALVE
BEVEL GEAR PARTS LIST
CLOW VALVE COMPANY
MODEL 2638

Item	Description	Material
1	Body - Mechanical Joint	ASTM A536 Ductile iron
	Body - Flange	ASTM A536 Ductile iron
	Body - MJ x Flange	ASTM A536 Ductile iron
2	Bolt	AISI 304 Stainless Steel
3	Nut	AISI 304 Stainless Steel
4	Wedge Casting	ASTM A536 Ductile iron
5	Molded Wedge	EPDM
6	Stem Nut	ASTM B763 alloy 995 Brass
7	Extension - actuator	ASTM A536 Ductile iron
8	Bolt	AISI 304 Stainless Steel
9	Nut	AISI 304 Stainless Steel
10	Key	Steel
11	Actuator - bevel gear	
12	O-ring	EPDM
13	Bolt	AISI 304 Stainless Steel
14	Bushing - stem guide	ASTM B584 alloy 836 Brass
15	O-ring	EPDM
16	Thrust Bearing	Nylatron
17	O-ring	EPDM
18	Cover Bushing	ASTM B584 alloy 836 Brass
19	O-ring	EPDM
20	Cover	ASTM A536 Ductile iron
21	O-ring - cover outer	EPDM
22	Stem	ASTM B763 alloy 995 Brass
23	Pipe Plug	AISI 304 Stainless Steel
24	Actuator Drive Bushing	Bronze
25	O-ring	EPDM
27	Scraper	ASTM B148 C954 Al Bronze
28	Track	AISI 316 Stainless Steel
29	Roller	ASTM B148 C954 Al Bronze
30	Pin - roller	AISI 316 Stainless Steel
31	O-ring - cover inner	EPDM
32	Pipe Plug	AISI 304 Stainless Steel

2638-57
A 3-2-04

30"-48" R/W VALVE
SPUR GEAR ASSEMBLY

CLOW VALVE COMPANY

MODEL 2638

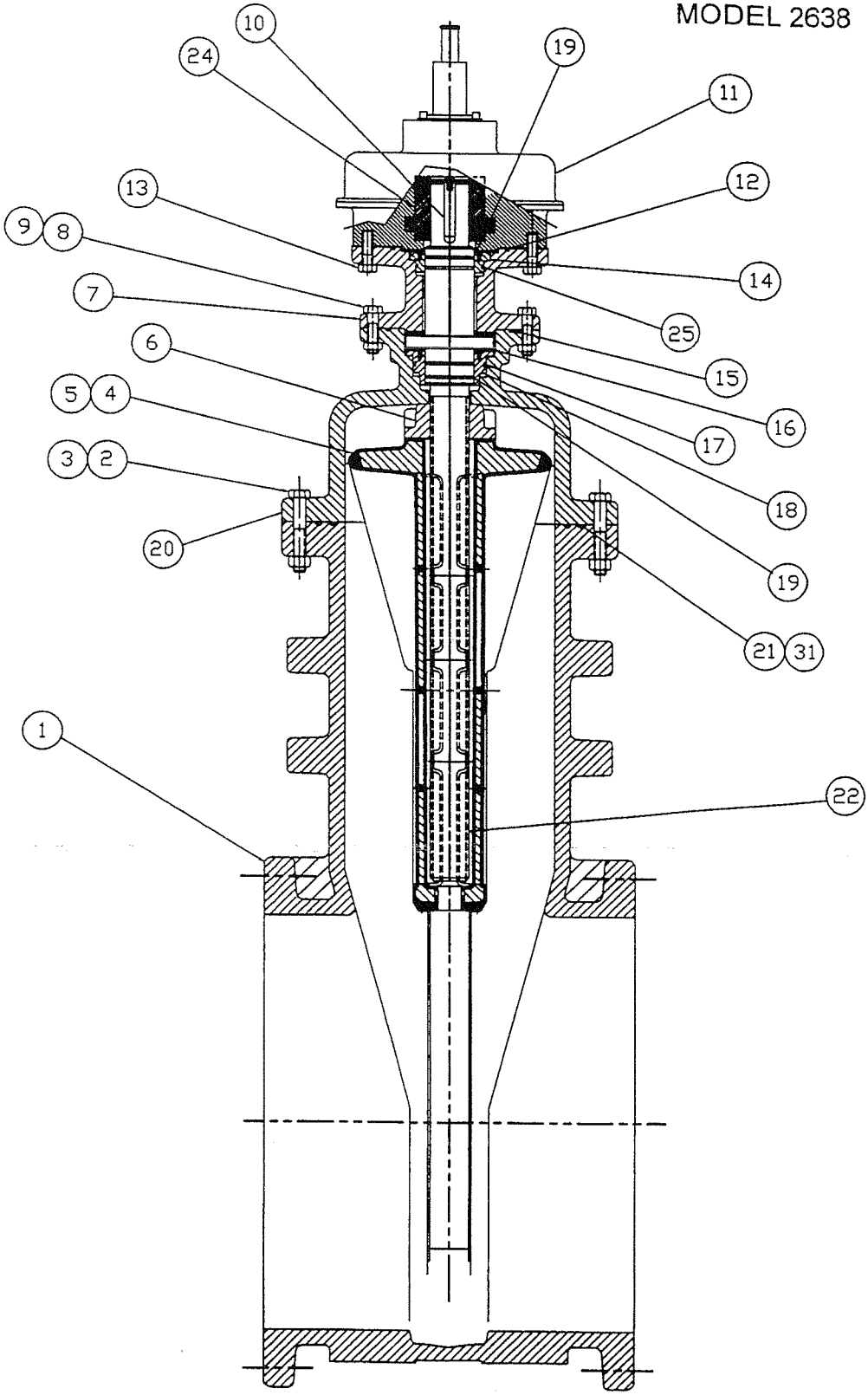

30"-48" R/W VALVE
SPUR GEAR ASSEMBLY

CLOW VALVE COMPANY

MODEL 2638

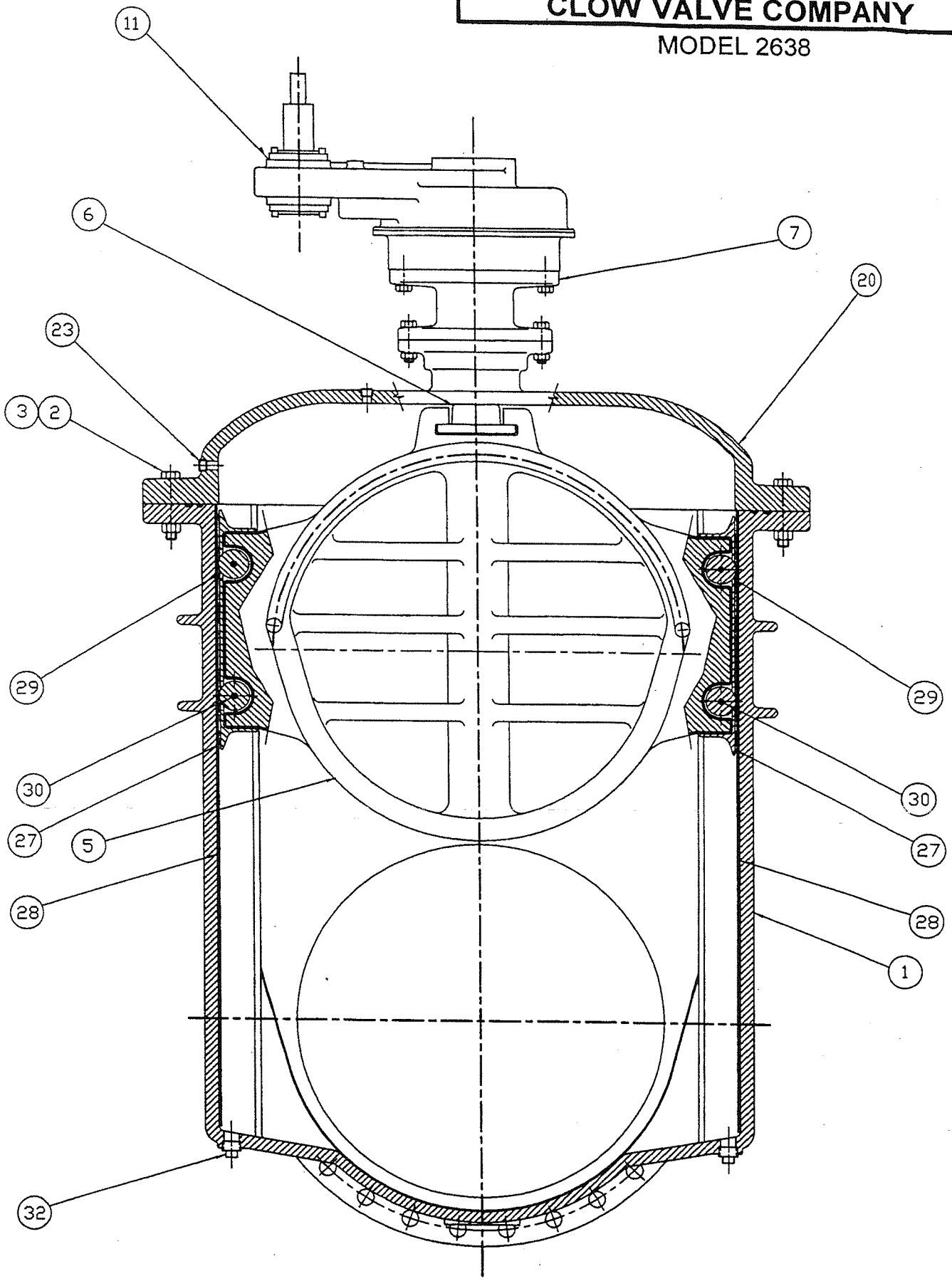

30"-48" R/W VALVE
SPUR GEAR PARTS LIST
CLOW VALVE COMPANY
MODEL 2638

Item	Description	Material
1	Body - Mechanical Joint	ASTM A536 Ductile iron
	Body - Flange	ASTM A536 Ductile iron
	Body - MJ x Flange	ASTM A536 Ductile iron
2	Bolt - 7/8-9NC hex hd x 5-1/2 lg	AISI 304 Stainless Steel
3	Nut - 7/8-9NC hex	AISI 304 Stainless Steel
4	Wedge Casting	ASTM A536 Ductile iron
5	Molded Wedge	EPDM
6	Stem Nut	ASTM B763 alloy 995 Brass
7	Extension - actuator	ASTM A536 Ductile iron
8	Bolt - 3/4-10NC x 3" lg hex hd	AISI 304 Stainless Steel
9	3/4-10NC hex nut	AISI 304 Stainless Steel
10	Key	Square Seel Keystock
11	Actuator - spur gear	
12	O-ring	EPDM
13	Bolt - 3/4-10NC x 2-1/2 lg hex hd	AISI 304 Stainless Steel
14	Bushing - stem guide	ASTM B584 alloy 836 Brass
15	O-ring	EPDM
16	Thrust Bearing	Nylatron
17	O-ring	EPDM
18	Cover Bushing	ASTM B584 alloy 836 Brass
19	O-ring #236	EPDM
20	Cover	ASTM A536 Ductile iron
21	O-ring - cover outer	EPDM
22	Stem	ASTM B584 alloy 867 Brass
23	Pipe Plug - 3/4 NPT w/ square hd	AISI 304 Stainless Steel
24	Actuator Drive Bushing	Bronze
25	O-ring	EPDM
27	Scraper	ASTM B148 C954 Al Bronze
28	Track	AISI 316 Stainless Steel
29	Roller	ASTM B148 C954 Al Bronze
30	Pin - roller	AISI 316 Stainless Steel
31	O-ring - cover inner	EPDM
32	Pipe Plug	AISI 304 Stainless Steel

Dis-assembly 30"-48" Geared Valve

Ref. 30"-48" RW GV ASSEMBLY DRAWINGS PAGES 10-15

1. Remove NPT pipe plug from top of gear.
2. Remove capscrew and large washer under pipe plug.
3. Remove (8) capscrews (13) from underside of gear.
4. Lift off gear assembly (11) retain key (10).
5. Remove (8) bolts & nuts (8&9) between extension (7) and cover (20).
6. Lift off extension (7).
7. Remove stem (22) by turning the stem in the opposite direction for opening the valve.
   Note; Lifting device will be required for disassembly.
8. Remove neck flange bolts and nuts (2&3) .
9. Lift off cover (20).
10. Thread stem (22) back into stem nut (6). Lift out wedge (5).
11. Reassemble in reverse order replacing cover o-ring (7) and follower o-ring (2) if necessary.

Troubleshooting
RW GV'S

Possible Malfunction	Symptoms – Causes	Corrective Action
Joint Leakage	*Bolt Tension Relaxing*	*Tighten Bolts*
Seat Leakage	*Foreign material caught in seat*	*Operate valve to flush Out debris.*
	Seats Dirty/Carroded	*Flush or dis-assemble & clean.*
	Seats Damaged	*Inspect-repair or Replace*
Leak Past Stem	*Bolts loose*	*Tighten Bolts*
	(NRS) Orings worn/damaged	*Inspect/replace*
	(OS&Y) Packing worn/damaged	*Inspect/replace*

Inspection for the above should be done semi/annually at the minimum.
There are no lubrication requirements other than;
*OS&Y valves should have the exposed stem **lubricated at each inspection.*
*** Food grade grease similar to Mystic FG2*

For Parts and Service Contact mfg's rep:

INSTRUCTIONS FOR USE

BEVEL GEAR OPERATORS

Bevel Range Specification:
Installation, Operating and Maintenance Instructions:
Assembly and Dismantling Instructions:
Spare Parts List and Recommended 5 Years Holding List:

Rotork Gears,

ROTORK GEARS BEVEL RANGE SPECIFICATION

Component	Material Specification
Gearcase	Cast Iron as standard, optional SG Iron, Carbon Steel or Stainless Steel.
Baseplate	SG Iron as standard, optional Cast Iron, Carbon Steel or Stainless Steel.
Input Housing	Cast Iron as standard, optional SG Iron, Carbon Steel or Stainless Steel.
Bevel Gear	SG Iron or Carbon Steel.
Pinion Gear & Shaft	Carbon Steel as standard, optional Stainless Steel.
Spigot Ring	SG Iron as standard, optional Cast Iron.
Screws	High Tensile Steel Metric Standard to BS3692 & 4168 as standard, optional Stainless Steel.
Bearings	Input Shaft - Ball type. Thrust Output - Needle roller type with thrust washers (with the exception of size 14, which has cylindrical roller thrust bearings and RAB range, which have taper roller bearings).
Output Sleeve A1 (for non rising valve spindles)	Steel.
Output Sleeve A2 (for rising valve spindles)	Aluminium Bronze.
Finish	PA 24 Grey Primer (Standard). Primer and Enamel Gloss (Optional). Other finishes available on request.
Lubricant	CL-X2 (Standard) max temp 120°C: Ignition temperature > 250°C LX-EP2 (High temp) max temp 160°C: Ignition temperature > 250°C MHF-H1 (Food) max temp 177°C: Ignition temperature > 260°C MO2 (Graphite) max temp 120°C: Flash point > 200°C G110 (Nuclear) max temp 150°C: Flash point > 200°C G130 (Nuclear) max temp 150°C: Flash point > 200°C
Seals	Nitrile (Standard) max temp 150°C: Ignition temperature > 300°C Viton (High temp/ Nuclear) max temp 200°C: Ignition temperature > 315°C Fluorosilicone (Low temp) max temp 225°C: Ignition temperature > 300°C Silicone sealant max temp 200°C: Ignition temperature > 450°C

Gearbox Detail	Gearbox Specification
Gearbox design Life	850 hours (20 minutes a day for 7 years)
Gears	Designed basically to BS545.
Gearbox type	Indicated on the nameplate
Gearbox ratio	Indicated on the nameplate
Maximum output torque	Indicated in the Rotork Gears catalogue
Maximum thrust	Indicated in the Rotork Gears catalogue
Gearbox duty specification	Indicated on the nameplate
Nameplate Explosion Marking and Category	According to 94/9/EC and indicated on the nameplate
Maximum speed for the input shaft	350 rpm
Maximum bending moment on the input flange	F10: 66Nm F14: 178Nm F16: 210Nm F25: 700Nm F30: 770Nm
Maximum operating temperature	Indicated on the nameplate
Gearbox weight	Indicated on the nameplate

C.F. 28.04.03 issue 2
F:\EXEECO\GBOX\ENGINEER\ATEX\Instructions\Bevel\Bevel Specification.doc

INSTALLATION, OPERATING AND MAINTENANCE INSTRUCTIONS FOR BEVELS AND SPURS GEAR OPERATORS

The Rotork Gears Spur and Bevel Range Specification sheets indicate the materials of construction and information for putting the equipment into service. The gearbox is marked according to 94/9/EC with the temperature class and explosion group on the equipment and this shall be observed when installing and operating the equipment. The user alone is responsible for the appropriate use of the gearbox in consideration of the basic conditions existing at the plant.

This range of gearboxes is supplied to suit the order requirements but, unless specifically requested at the ordering stage, the output sleeve will be supplied blank and must be machined to suit the equipment to be operated. NTB gearboxes do not have a removable output sleeve.

A thrust element retention device is normally fitted to the baseplate for transporting purposes and MUST be removed to access the output sleeve. The output sleeve can be easily removed from the gearbox by first removing the loose piece spigot ring from the baseplate. It is imperative that the thrust bearings in the output are re-assembled correctly, along with the output sleeve and the spigot ring - That is: models that use needle roller thrust bearings **MUST** have a thrust washer at each side of the needle race. A bearing / washer assembly **MUST** be fitted at each side of the output sleeve thrust shoulder. Models with taper roller bearings **MUST** be assembled with the bearings correctly orientated. All thrust elements and bearing cavities must be packed with grease of the correct specification.

NOTES FOR MOUNTING TO THE VALVE

1. The valve spindle must be greased before assembly of the gearbox to the valve.
2. Thrust element retention device to be removed prior to assembly to the valve.
3. Do not pack the spindle cover tube with grease as this can lead to pressure build up in the gearbox.
4. Flanges to be sealed on assembly with silicone sealant.
5. Spindle cover tubes and plugs to be sealed with suitable sealant.

If the gearbox has been supplied with a handwheel, it is recommended that this be fitted to the gearbox before mounting on the valve. This will make it easier to rotate the gearing to pick up the start of a thread or key location.

On a keyed valve shaft, once the key and keyway are lined up, the gearbox can be lowered onto the mounting flange and bolted down.

On a screwed valve shaft, rotating the handwheel will cause the gearbox to screw itself down the spindle. Once in the correct position it can be bolted down.

For large gearboxes, IB8 to IB14 and IS7 to IS20, we recommend fitting the thrust elements onto the valve prior to fitting the gearbox. The spigot ring and one set of thrust washers and bearings can be placed onto the valve first, then the output sleeve can be screwed down or fitted onto the spindle key, depending on the valve spindle design. The second set of thrust washers and bearings are then fitted. The gearbox then can be lowered onto the valve, taking care that the splines in the output gear and output sleeve do not get damaged.

When bolting the valve to the gearbox we recommend using at least grade 8.8 fasteners, and these **MUST** be torque tightened dependent upon the grade and size used.

If an electric actuator is fitted to the gearbox, a suitable input adaptor will have been supplied. After mounting the actuator to the to the gearbox, the limit and torque switch settings must be made in accordance with the manufacturer's instructions. The maximum permitted bending moment on the input adaptor of the gearbox is indicated on the gearbox specification sheet.

HANDLING

Combined valve, actuator and gearbox must <u>NOT</u> be slung from the gearbox.

MAINTENANCE

All gear cavities are lubricated and sealed for life and the type of grease and seals used within the gearbox is indicated on the nameplate and shown in the material specification. The required maintenance intervals depend on the respective application and will therefore have to be determined by the user dependent on the conditions of use. Annual inspection of the gearbox is recommended, but under normal operating conditions no maintenance is required for the gearbox, but should the valve be taken out of service for overhaul, the gearbox baseplate may be removed and the grease renewed. The baseplate must be sealed using silicone sealant on re-assembly, unless fitted with an O ring. Below is a table for the recommended tightening of screws.

	HEXAGON HEAD GRADE 8.8		HEXAGON HEAD GRADE 8.8 WITH NORDLOCK WASHER		SOCKET HEAD GRADE 12.9		SOCKET HEAD GRADE 12.9 WITH NORDLOCK WASHER		DURLOK GRADE 12.9 SCREW GRADE 12 NUT	
SCREW SIZE	TORQUE TIGHTNESS (Nm)	TORQUE TIGHTNESS (lbsft)	TORQUE TIGHTNESS (Nm)	TORQUE TIGHTNESS (lbsft)	TORQUE TIGHTNESS (Nm)	TORQUE TIGHTNESS (lbsft)	TORQUE TIGHTNESS (Nm)	TORQUE TIGHTNESS (lbsft)	TORQUE TIGHTNESS (Nm)	TORQUE TIGHTNESS (lbsft)
M4	2	2	3	2	4	3	5	4		
M5	5	4	6	4	8	6	10	7	11	8
M6	9	6	10	8	14	11	17	13	19	14
M8	21	15	25	18	35	26	42	31	45	33
M10	41	30	49	36	69	51	83	61	86	64
M12	71	53	86	63	121	89	145	107	152	112
M16	177	131	213	157	299	221	359	265	372	274
M20	346	255	415	306	584	431	701	517	717	529
M24	598	441	718	529	1009	744	1211	893		
M30					2006	1480			Note: Once fully torque tightened Durlok fasteners must not be re used on Nuclear gearboxes.	
M36					3508	2587				
										Copy of QC 40-2

NB. All thrust elements and bearing cavities must be re-greased and refitted in the correct order.

SPARES

Spare parts must be selected from the spare parts lists and a recommended spares holding for 5 years is shown on the spare parts list.

PROCEDURE FOR
DISMANTLING / RE-ASSEMBLY OF BEVEL GEAR OPERATORS

1. **PURPOSE:** To provide dismantling / re-assembly instructions.

2. **SCOPE:** Rotork Gears range of bevel gearboxes

3. **DEFINITION:** Sequence of instructions to dismantle and re-assemble Rotork Gears bevel gearboxes.

4. **PROCEDURE:** Refer to spare parts list for item numbers.

4.1 Dismantling

4.1.1 Remove the key (17) from the input shaft (5).
4.1.2 Remove the 4 off socket head cap screws (20), which secure the input housing (3) to the gearcase (1).
4.1.3 Remove the input housing from the gearcase complete with the input shaft, bearings (10) and spacer (11) where applicable.
4.1.4 Remove the input shaft from the housing.
4.1.5 Remove the 8 off socket head cap screws (21), which secure the baseplate (2) to the gearcase.
4.1.6 Remove the baseplate from the gearcase. The bevel gear (4) will probably remain on the splines of the output sleeve (6) for IB, RAB and HOB gearboxes.
4.1.7 Remove the bevel gear from the output sleeve on the IB, RAB or HOB, or from the baseplate or gearcase of the NTB gearbox.
4.1.8 Remove the spigot ring (7), bearings (8), thrust washers (9), where applicable, and output sleeve from the baseplate of the IB, RAB or HOB gearbox.

4.2 Re-assembly

4.2.1 Ensure the bevel gear and baseplate are free from dirt and bruising and then fit the 'o' ring (14) to the bevel gear.
4.2.2 Fit the 'o' ring (15) to the gearcase and re-pack the gearcase with grease (22).
4.2.3 Re-fit the output gear into the gearcase ensuring that the 'o' ring (15) remains undamaged.
4.2.4 Grease the back face of the bevel gear before re-fitting the baseplate.
4.2.5 Fit the 'o' ring (24) to the baseplate and re-fit the baseplate into the gearcase. For the NTB gearbox also fit the 'o' ring (13) onto the output gear prior to fixing the baseplate.
4.2.6 Re-secure the gearcase to the baseplate using the existing screws (21) using a diagonal tightening movement.
4.2.7 Reassemble the input housing sub assembly with the input shaft, spacer and bearings ensuring are parts are clean and repack the housing with grease. Fit the 'o' rings (16 and 23) in the housing.
4.2.8 Re-fit the input housing sub-assembly into the gearcase ensuring that the input shaft gear locates into the bevel gear.
4.2.9 Secure the input housing to the gearcase with the existing screws (20) using a diagonal tightening movement.
4.2.10 Re-fit the key to the input shaft.
4.2.11 For IB, RAB and HOB gearboxes apply grease to the thrust bearings and washers, where applicable, and re assemble the output sleeve and spigot assembly into the baseplate. Ensure that the 'o' ring (14) remains undamaged.
4.2.12 Test the gearbox for free rotation.

5. **DOCUMENTATION**

Spare parts list for range of bevel gear actuators:	Bevel Part List.doc
Torque tightening figures.	Document No QC 40-2

SPARE PARTS LIST FOR RANGE OF BEVEL GEAR OPERATORS

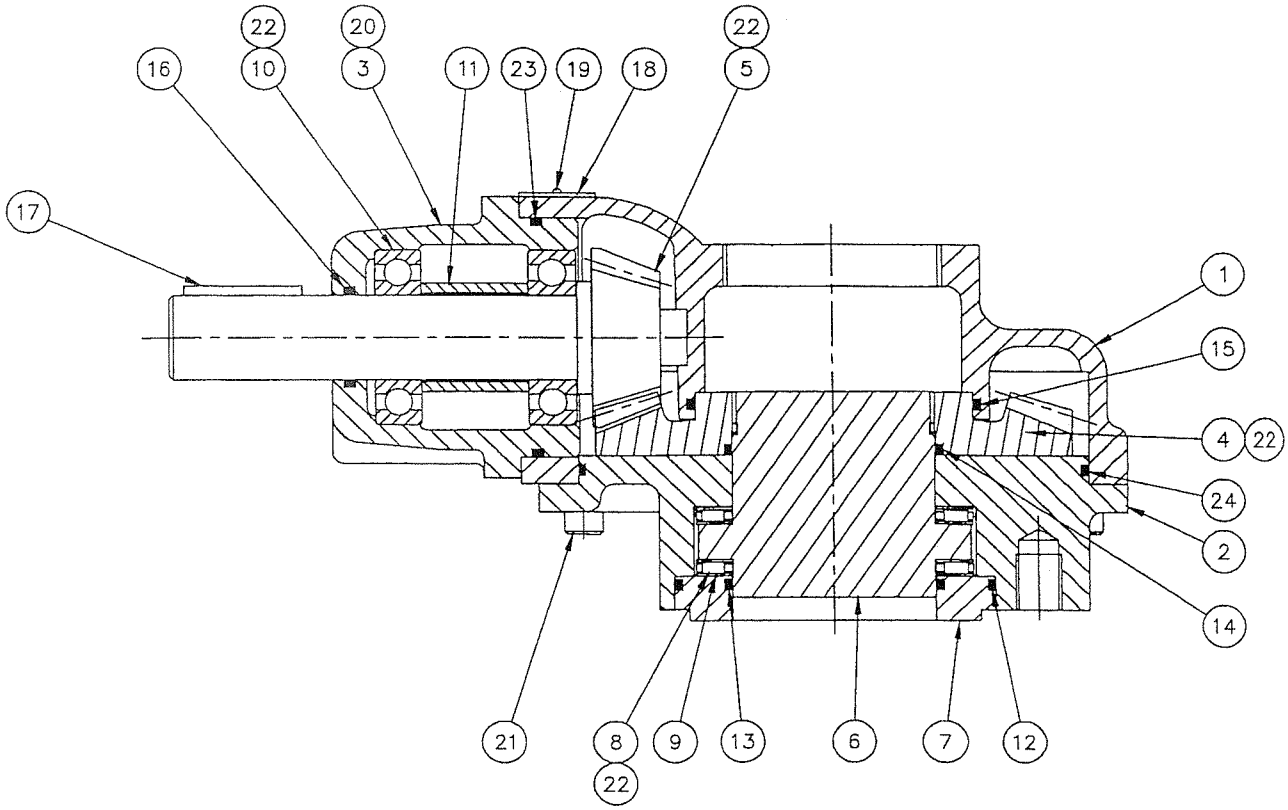

ITEM	DESCRIPTION	QUANTITY
1	GEARCASE	1
2	BASEPLATE	1
3	INPUT HOUSING	1
4	BEVEL GEAR	1
5	INPUT SHAFT & GEAR	1
6	OUTPUT SLEEVE	1 (IB, RAB & HOB only)
7	SPIGOT RING	1 (IB, RAB & HOB only)
* 8	THRUST BEARING	2 (IB, RAB & HOB only)
* 9	THRUST WASHER	4 (IB1-13, & HOB only)
*10	BALL BEARING	2 for IB & RAB (1 for HOB & NTB)
11	BEARING SPACER	1 (IB & RAB only)
*12	'O' RING	1 (IB, RAB & HOB only)
*13	'O' RING	1
*14	'O' RING	1 (IB, RAB & HOB only)
*15	'O' RING	1
*16	'O' RING	1
17	KEY	1
18	NAMEPLATE	1
19	NAMEPLATE RIVET	2
20	SOCKET HEAD CAP SCREW	4
21	SOCKET HEAD CAP SCREW	8
22	GREASE	
*23	'O' RING	1
*24	'O' RING	1

Note: items marked * are the recommended spares holding for 5 years operation.

INSTRUCTIONS FOR USE

SPUR GEAR OPERATORS

Spur Range Specification:
Installation, Operating and Maintenance Instructions:
Assembly and Dismantling Instructions:
Spare Parts List and Recommended 5 Years Holding List:

Rotork Gears,
Regina House,
Bramley,
Leeds,
LS13 4ET,
England.

ROTORK GEARS SPUR RANGE SPECIFICATION

Component	Material Specification
Gearcase	Cast Iron as standard, optional SG Iron, Carbon Steel or Stainless Steel.
Baseplate	SG Iron as standard, optional Cast Iron, Carbon Steel or Stainless Steel.
Input Housing	Cast Iron as standard, optional SG Iron, Carbon Steel or Stainless Steel.
Output Gear	SG Iron as standard or Carbon Steel.
Pinion Gear & Shaft	Carbon Steel as standard, optional Stainless Steel.
Spigot Ring	SG Iron as standard, optional Cast iron.
Screws	High Tensile Steel Metric Standard to BS3692 & 4168 as standard, optional Stainless Steel.
Bearings	Input Shaft - Ball Type. Thrust Output – Needle roller type with thrust washers (with the exception of sizes 14, 16, 18, 19 & 20 which have cylindrical roller thrust bearings).
Output Sleeve A1 (for non rising valve spindles)	Steel.
Output Sleeve A2 (for rising valve spindles)	Aluminium Bronze.
Finish	PA 24 Grey Primer (Standard). Primer and Enamel Gloss (Optional). Other finishes available on request.
Lubricant	CL-X2 (Standard) max temp 120°C: Ignition temperature > 250°C LX-EP2 (High temp) max temp 160°C: Ignition temperature > 250°C MHF-H1 (Food) max temp 177°C: Ignition temperature > 260°C MO2 (Graphite) max temp 120°C: Flash point > 200°C G110 (Nuclear) max temp 150°C: Flash point > 200°C G130 (Nuclear) max temp 150°C: Flash point > 200°C
Seals	Nitrile (Standard) max temp 150°C: Ignition temperature > 300°C Viton (High temp and Nuclear) max temp 200°C: Ignition temperature > 315°C Fluorosilicone (Low temp) max temp 225°C: Ignition temperature > 300°C Silicone sealant max temp 200°C: Ignition temperature > 450°C

Gearbox Detail	Gearbox Specification
Gearbox design Life	850 hours (20 minutes a day for 7 years)
Gears	Designed basically to BS436.
Gearbox type	Indicated on the nameplate
Gearbox ratio	Indicated on the nameplate
Maximum output torque	Indicated in the Rotork Gears catalogue
Maximum thrust	Indicated in the Rotork Gears catalogue
Gearbox duty specification	Indicated on the nameplate
Nameplate Explosion Marking and Category	According to 94/9/EC and indicated on the nameplate
Maximum speed for the input shaft	350 rpm
Maximum bending moment on the input flange	F10: 66Nm F14: 178Nm F16: 210Nm F25: 700Nm F30: 770Nm
Maximum operating temperature	Indicated on the nameplate
Gearbox weight	Indicated on the nameplate

C.F. 14.08.03 issue 2
F:\EXEECO\GBOX\ENGINEER\ATEX\Instructions\Spur\Spur Specification.doc

INSTALLATION, OPERATING AND MAINTENANCE INSTRUCTIONS FOR BEVELS AND SPURS GEAR OPERATORS

The Rotork Gears Spur and Bevel Range Specification sheets indicate the materials of construction and information for putting the equipment into service. The gearbox is marked according to 94/9/EC with the temperature class and explosion group on the equipment and this shall be observed when installing and operating the equipment. The user alone is responsible for the appropriate use of the gearbox in consideration of the basic conditions existing at the plant.

This range of gearboxes is supplied to suit the order requirements but, unless specifically requested at the ordering stage, the output sleeve will be supplied blank and must be machined to suit the equipment to be operated. NTB gearboxes do not have a removable output sleeve.

A thrust element retention device is normally fitted to the baseplate for transporting purposes and **MUST** be removed to access the output sleeve. The output sleeve can be easily removed from the gearbox by first removing the loose piece spigot ring from the baseplate. It is imperative that the thrust bearings in the output are re-assembled correctly, along with the output sleeve and the spigot ring - That is: models that use needle roller thrust bearings **MUST** have a thrust washer at each side of the needle race. A bearing / washer assembly **MUST** be fitted at each side of the output sleeve thrust shoulder. Models with taper roller bearings **MUST** be assembled with the bearings correctly orientated. All thrust elements and bearing cavities must be packed with grease of the correct specification.

NOTES FOR MOUNTING TO THE VALVE

1. The valve spindle must be greased before assembly of the gearbox to the valve.
2. Thrust element retention device to be removed prior to assembly to the valve.
3. Do not pack the spindle cover tube with grease as this can lead to pressure build up in the gearbox.
4. Flanges to be sealed on assembly with silicone sealant.
5. Spindle cover tubes and plugs to be sealed with suitable sealant.

If the gearbox has been supplied with a handwheel, it is recommended that this be fitted to the gearbox before mounting on the valve. This will make it easier to rotate the gearing to pick up the start of a thread or key location.

On a keyed valve shaft, once the key and keyway are lined up, the gearbox can be lowered onto the mounting flange and bolted down.

On a screwed valve shaft, rotating the handwheel will cause the gearbox to screw itself down the spindle. Once in the correct position it can be bolted down.

For large gearboxes, IB8 to IB14 and IS7 to IS20, we recommend fitting the thrust elements onto the valve prior to fitting the gearbox. The spigot ring and one set of thrust washers and bearings can be placed onto the valve first, then the output sleeve can be screwed down or fitted onto the spindle key, depending on the valve spindle design. The second set of thrust washers and bearings are then fitted. The gearbox then can be lowered onto the valve, taking care that the splines in the output gear and output sleeve do not get damaged.

When bolting the valve to the gearbox we recommend using at least grade 8.8 fasteners, and these **MUST** be torque tightened dependent upon the grade and size used.

If an electric actuator is fitted to the gearbox, a suitable input adaptor will have been supplied. After mounting the actuator to the to the gearbox, the limit and torque switch settings must be made in accordance with the manufacturer's instructions. The maximum permitted bending moment on the input adaptor of the gearbox is indicated on the gearbox specification sheet.

HANDLING

Combined valve, actuator and gearbox must <u>NOT</u> be slung from the gearbox.

MAINTENANCE

All gear cavities are lubricated and sealed for life and the type of grease and seals used within the gearbox is indicated on the nameplate and shown in the material specification. The required maintenance intervals depend on the respective application and will therefore have to be determined by the user dependent on the conditions of use. Annual inspection of the gearbox is recommended, but under normal operating conditions no maintenance is required for the gearbox, but should the valve be taken out of service for overhaul, the gearbox baseplate may be removed and the grease renewed. The baseplate must be sealed using silicone sealant on re-assembly, unless fitted with an O ring. Below is a table for the recommended tightening of screws.

	HEXAGON HEAD GRADE 8.8		HEXAGON HEAD GRADE 8.8 WITH NORDLOCK WASHER		SOCKET HEAD GRADE 12.9		SOCKET HEAD GRADE 12.9 WITH NORDLOCK WASHER		DURLOK GRADE 12.9 SCREW GRADE 12 NUT	
SCREW SIZE	TORQUE TIGHTNESS (Nm)	TORQUE TIGHTNESS (lbsft)	TORQUE TIGHTNESS (Nm)	TORQUE TIGHTNESS (lbsft)	TORQUE TIGHTNESS (Nm)	TORQUE TIGHTNESS (lbsft)	TORQUE TIGHTNESS (Nm)	TORQUE TIGHTNESS (lbsft)	TORQUE TIGHTNESS (Nm)	TORQUE TIGHTNESS (lbsft)
M4	2	2	3	2	4	3	5	4		
M5	5	4	6	4	8	6	10	7	11	8
M6	9	6	10	8	14	11	17	13	19	14
M8	21	15	25	18	35	26	42	31	45	33
M10	41	30	49	36	69	51	83	61	86	64
M12	71	53	86	63	121	89	145	107	152	112
M16	177	131	213	157	299	221	359	265	372	274
M20	346	255	415	306	584	431	701	517	717	529
M24	598	441	718	529	1009	744	1211	893		
M30					2006	1480			Note: Once fully torque tightened Durlok fasteners must not be re used on Nuclear gearboxes.	
M36					3508	2587				
										Copy of QC 40-2

NB. All thrust elements and bearing cavities must be re-greased and refitted in the correct order.

SPARES

Spare parts must be selected from the spare parts lists and a recommended spares holding for 5 years is shown on the spare parts list.

C.F. 29.05.03 issue 1
F:\EXEECO\GBOX\ENGINEER\ATEX\Instructions\Spur\Installation Instructions for Bevel-Spur.doc

PROCEDURE FOR DISMANTLING / RE-ASSEMBLY OF SPUR GEAR OPERATORS

1. **PURPOSE:** To provide dismantling / re-assembly instructions.

2. **SCOPE:** Rotork Gears range of spur gearboxes

3. **DEFINITION:** Sequence of instructions to dismantle and re-assemble Rotork Gears spur gearboxes.

4. **PROCEDURE:** Refer to spare parts list for item numbers.

4.1 Dismantling

4.1.1 Remove the key (28) from the input shaft (8).
4.1.2 Remove the 4 off socket head cap screws (25), which secure the input housing (4) to the gearcase (1). The endcap, where used, can also be removed.
4.1.3 Remove the input housing from the gearcase complete with the input shaft, bearings (17) and the spacer (12) where applicable.
4.1.4 Remove the input shaft from the housing. Remove the input gear (9) and key (30) where applicable.
4.1.5 Remove the 8 off socket head cap screws (26), which secure the baseplate (2) to the gearcase.
4.1.6 Remove the baseplate from the gearcase. The output gear (5) will probably remain on the splines of the output sleeve (11).
4.1.7 Remove the output gear from the output sleeve and the output hub (5) from the output gear where applicable.
4.1.8 Remove the spigot ring (10), bearings (16), thrust washers (15) and output sleeve from the baseplate..
4.1.9 Remove the hexagonal head screw (27) where applicable and remove idler shaft (6) from the gearcase.
4.1.10 Remove the idler gear (7) from the gearcase and remove the bearings (18) from the idler gear.
4.1.11 The input gear can be removed from the gearcase if not removed in 4.1.4.

4.2 Re-assembly

4.2.1 Position the input gear in the gearcase if removed in 4.1.10.
4.2.2 Grease and fit the bearings into the idler gear and position in the gearcase.
4.2.3 Fit the 'o' ring (23) to the idler shaft and re-fit the idler shaft into the gearcase and the idler gear. Re-secure the hexagonal head screw where applicable.
4.2.4 Ensure that the output gear and baseplate are free from dirt and bruising and then fit the 'o' rings (21 and 22) to the output gear.
4.2.5 Re-pack the gearcase with grease.
4.2.6 Fit the output gear and output hub, where applicable, into the gearcase and locate with the idler gear.
4.2.7 Fit the 'o' ring (31) to the baseplate and re-secure the baseplate to the gearcase using the existing screws (26) by using a diagonal tightening movement.
4.2.8 Reassemble the input housing sub assembly with the input shaft, input gear, key spacer and bearings ensuring are parts are clean and repack the housing with grease. Fit 'o' rings (13 and 24) to the housing.
4.2.9 Re-fit the input housing sub-assembly into the gearcase ensuring that the input gear locates with the idler gear.
4.2.10 Secure the input housing to the gearcase with the existing screws (25) using a diagonal tightening movement.
4.2.11 Re-fit the key to the input shaft.
4.2.12 Apply grease to the thrust bearings and washers and re assemble the output sleeve and spigot ring assembly into the baseplate. Ensure that the 'o' ring (21) remains undamaged.
4.2.13 Test the gearbox for free rotation.

5. **DOCUMENTATION**

Spare parts list for range of spur gear actuators:	Spur Part List.doc
Torque tightening figures.	Document No QC 40-2

SPARE PARTS LIST FOR RANGE OF SPUR GEAR ACTUATORS

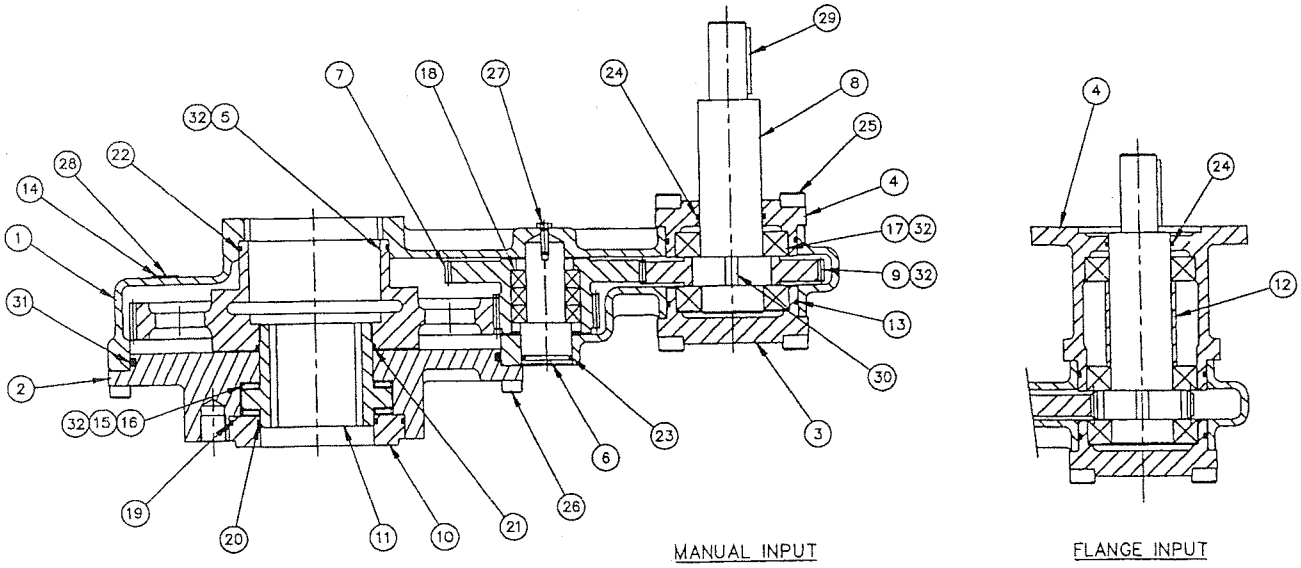

ITEM	DESCRIPTION	QUANTITY
1	GEARCASE	1
2	BASEPLATE	1
3	ENDCAP (BLANK)	1 (not used on IS2 to IS5)
4	INPUT HOUSING	1
5	OUTPUT GEAR	1 (IS15-20 has additional Output Hub)
6	IDLER SHAFT	1 (IS6, 7, 10–20 has additional Spacer)
7	IDLER GEAR	1
8	INPUT SHAFT	1 (can be combined with items 9 & 30)
9	INPUT GEAR	1 (can be combined with items 8 & 30)
10	SPIGOT RING	1
11	OUTPUT SLEEVE	1
12	SPACER	1
13	O RING	2 (1 for IS2 to IS5)
14	NAMEPLATE	1
*15	THRUST WASHER	4 (not used on IS14, 16, 18, 19, 20)
*16	THRUST BEARING	2
*17	BALL BEARING	2 (Manual input) or 3 (Flange Input)
*18	BALL BEARING	2 (2-7), 3 (8-11), 4 (12-16), 6 (17-20)
*19	O RING	1
*20	O RING	1
*21	O RING	1
*22	O RING	1
*23	O RING	1
*24	O RING	1
25	SOCKET HEAD CAP SCREW	8 (4 for IS2 to IS5)
26	SOCKET HEAD CAP SCREW	8
27	HEXAGON HEAD SCREW	1 for IS6 & IS7 only
28	RIVET	2
29	KEY	1
30	KEY	1 (can be combined with items 8 & 9)
*31	O RING	1
32	GREASE	

Note: items marked * are the recommended spares holding for 5 years operation.

APPENDIX A

As-Built Drawings (Separate Volumes)

A-1: Lower Feather River Setback Levee at Star Bend - LD1 Contract No. 09-02
A-2: Lower Feather River at Star Bend Irrigation System Relocation
- LD1 Contract No. 09-01

APPENDIX B

Gate Valve Operation and Maintenance Information

APPENDIX C

Superintendent's Guide to Operation & Maintenance of California's Flood Control Projects

APPENDIX D

Flood Fighting Methods DWR Division of Flood Management August 2010

APPENDIX E

Central Valley Flood Protection Board Encroachment (CVFPB) Permits

CVFPB Permit No. 18191 for LD1 Setback Levee at Star Bend
CVFPB Permit No. 18437 for Tudor Mutual Water Company Irrigation Facilities
CVFPB Permit No. 18438 for Volcano Vista Farms Irrigation Facilities

APPENDIX F

Habitat Enhancement Plan (HEP) for Feather River Setback Levee and Habitat Enhancement Project at Star Bend - March 6, 2009, (inclusive of USFWS Biological Opinions of February 6, 2009, for Star Bend VELB and September 9, 2005 for O'Conner Lakes VELB.

APPENDIX G

Feather River Setback Levee and Phase 1 Habitat Enhancement Project at Star Bend 2010 Initial Monitoring Report - Year 1, prepared by Restoration Resources, inclusive of As-Builts:

- **A-1 As-Built Planting and Irrigation Plan, Sheet 1 of 3**
- **A-2 As-Built Planning Plan, Sheet 2 of 3**
- **A-3 Sample Planting Matrix, Sheet 1 of 3**

APPENDIX H

USACE Flood Damage Reduction Segment/System Inspection Report

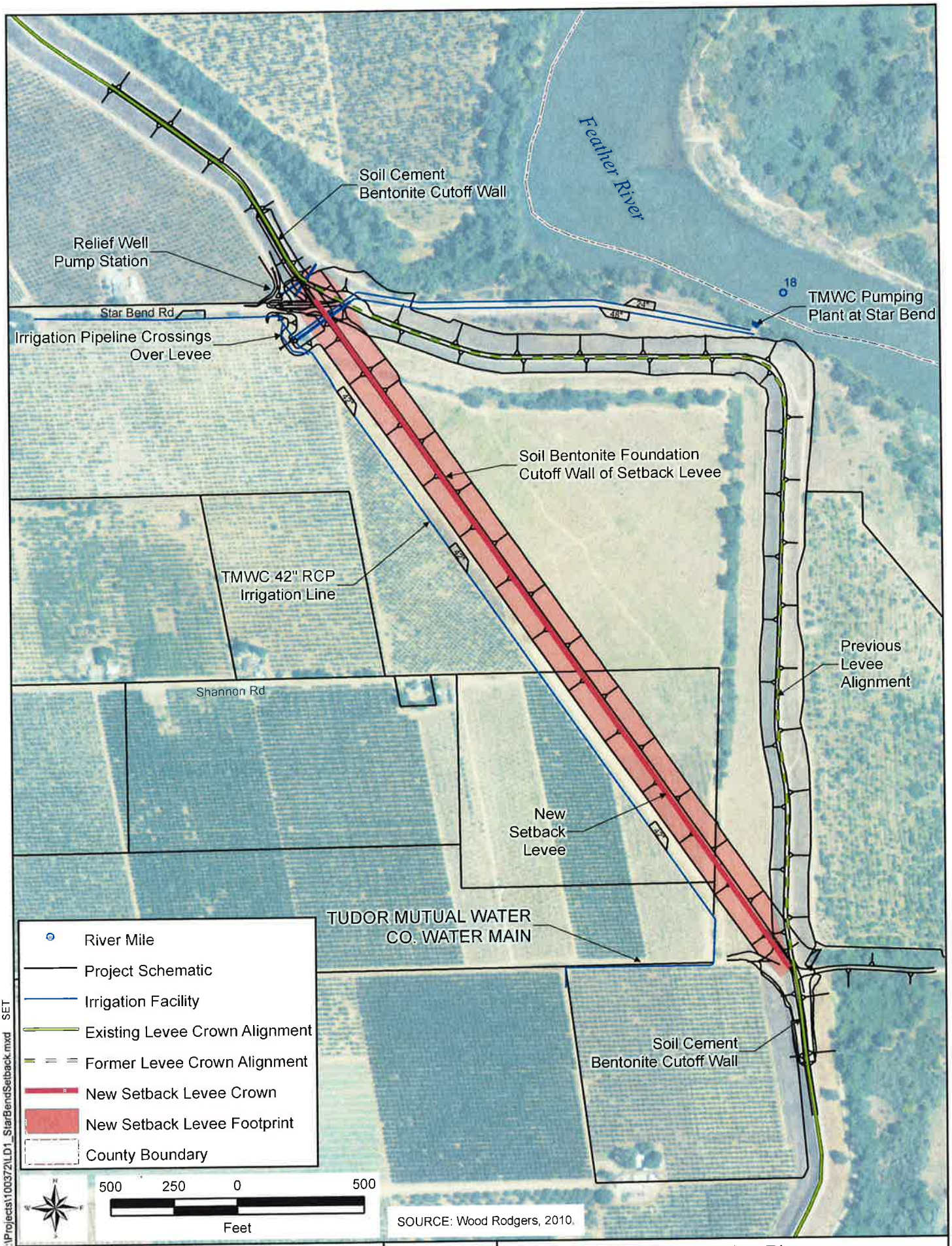

Supplement to Standard O&M Manual

Levee District One of Sutter County

GEI Consultants

Lower Feather River
Setback Levee at Star Bend

JANUARY 2011 DRAFT FIGURE 3

3-Jan-2011 Z:\Projects\1003721\LD1_StarBendSetback.mxd SET

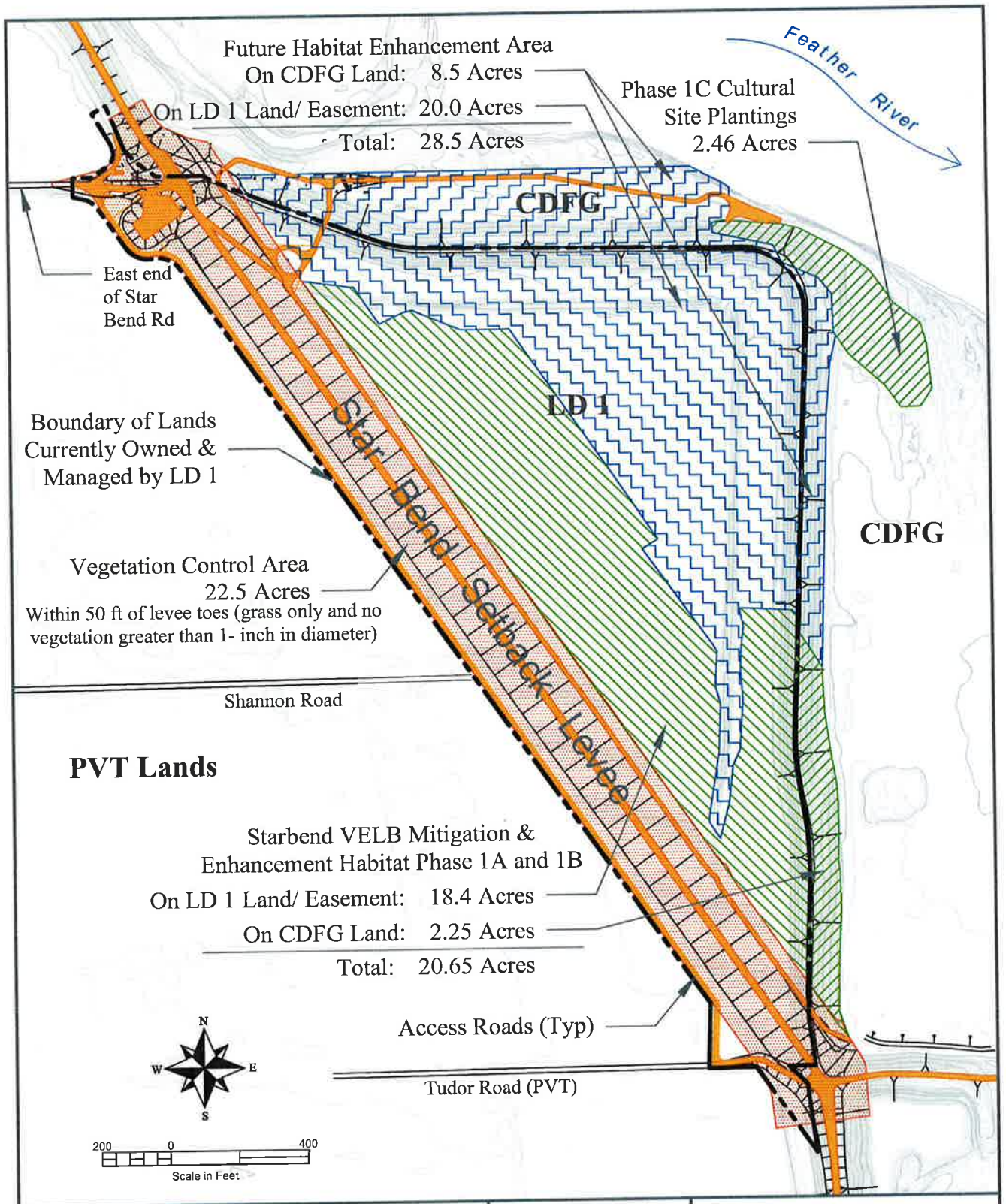

Levee District 1 of Sutter County Supplement to Standard O&M Manual	GEI Consultants Bookman-Edmonston Division	Star Bend Set Back Levee Vegetation Management Areas Near River Mile 18.0
Levee District 1, Yuba City, CA	Project 100372	December, 2010 / Figure 4

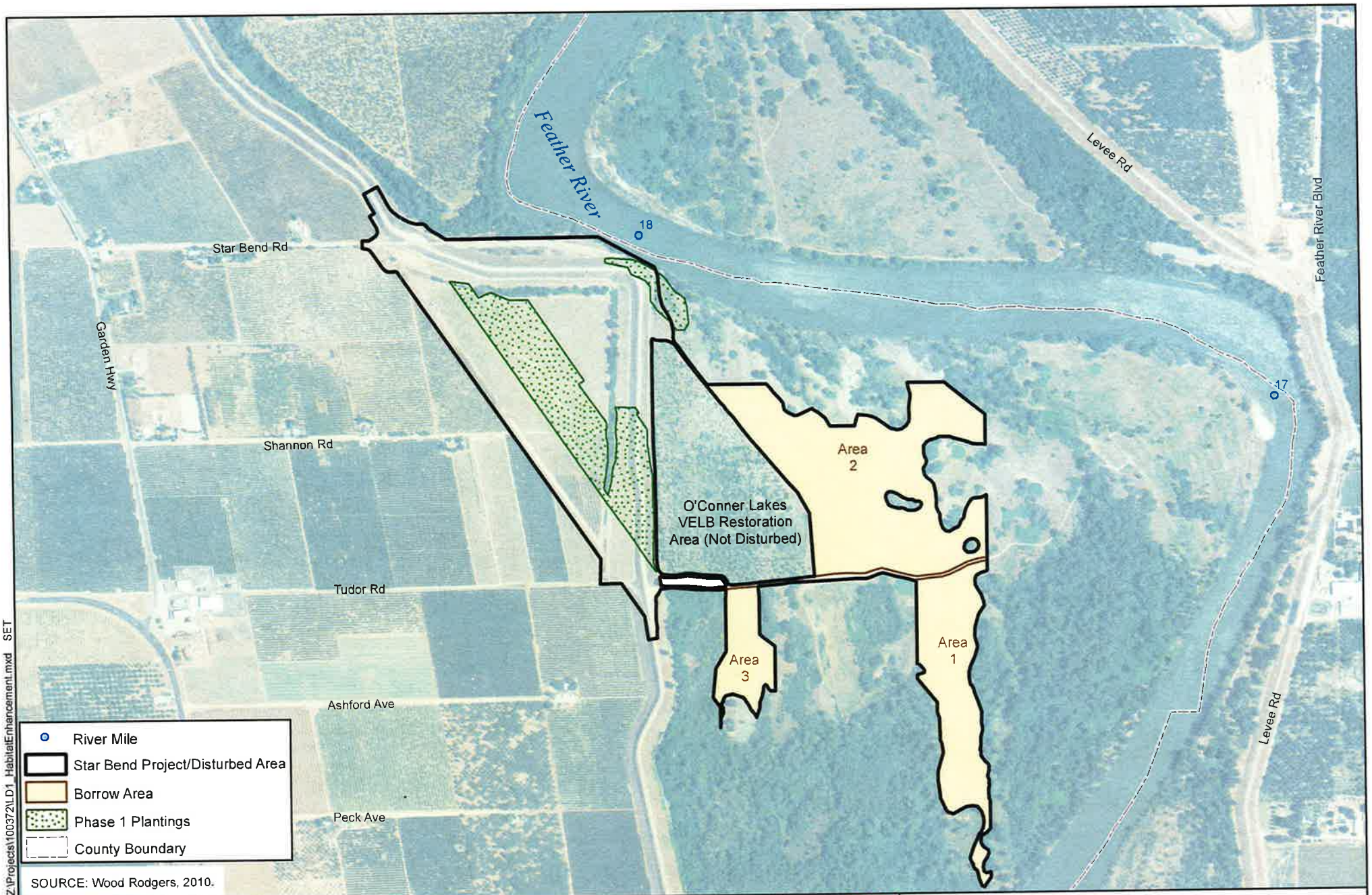

SOURCE: Wood Rodgers, 2010.

1,000 500 0 1,000
Feet

Supplement to Standard O&M Manual

Levee District One of Sutter County

GEI Consultants
Bookman-Edmonston Division

PROJECT BOUNDARIES OF FEATHER RIVER SETBACK LEVEE AT STAR BEND

JANUARY 2011 DRAFT FIGURE 5

30-Dec-2010 Z:\Projects\100372\LD1_HabitatEnhancement.mxd SET

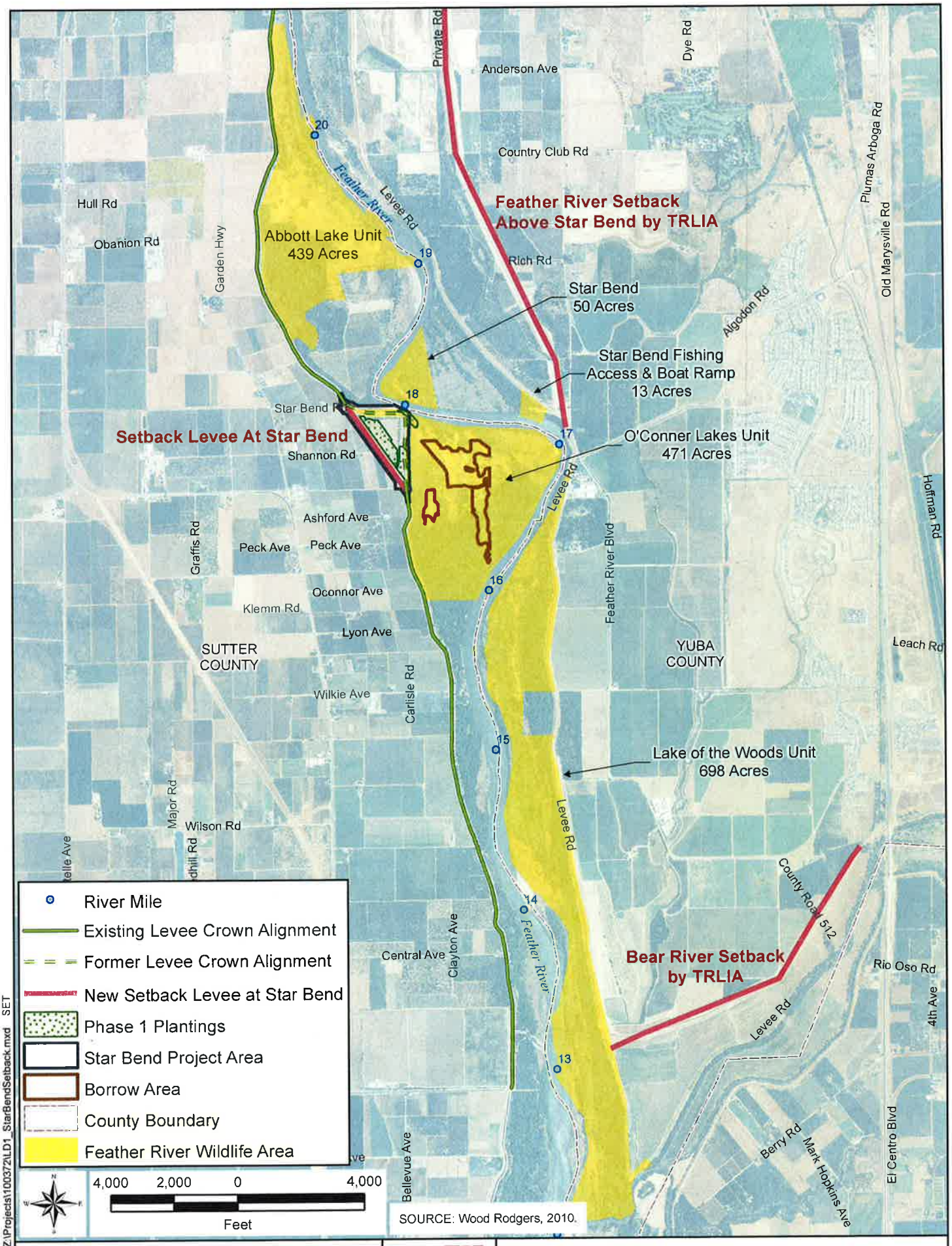

Z:\Projects\100372\LD1_StarBendSetback.mxd SET

3-Jan-2011

Supplement to Standard O&M Manual

Levee District One of Sutter County

GEI Consultants

Local Units of Feather River Wildlife Area

JANUARY 2011 DRAFT FIGURE 6

Figure 7

Lower Feather River Corridor (River Miles 13.0-30.0)

2010 Baseline Hydraulic Profile Conditions along West Bank Levee, Unit No 144

LD # 1 Right Bank Levee Unit No. 144 RM 12.8 (LM 0.0) - RM 30.0 (LM 16.65)

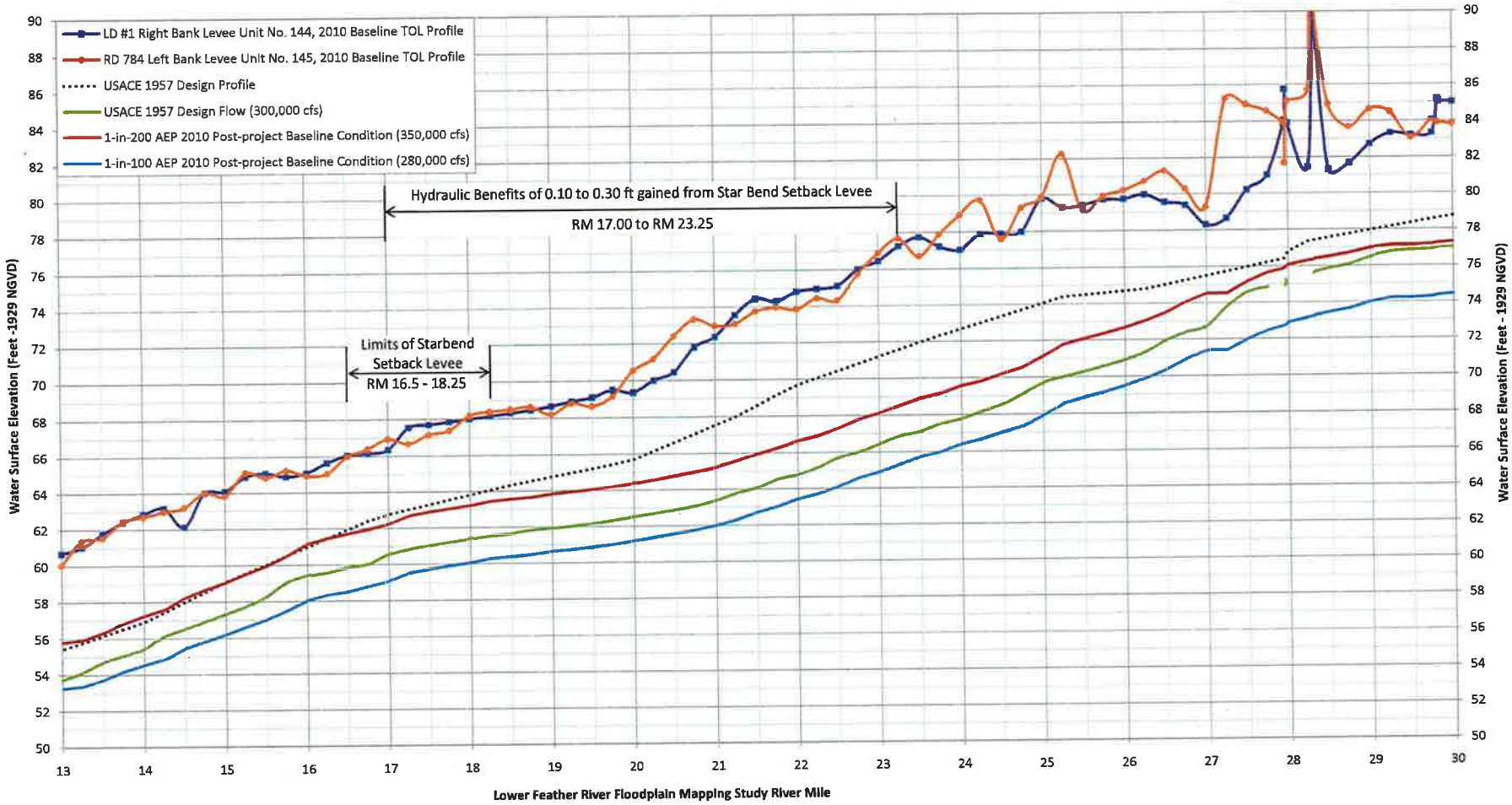

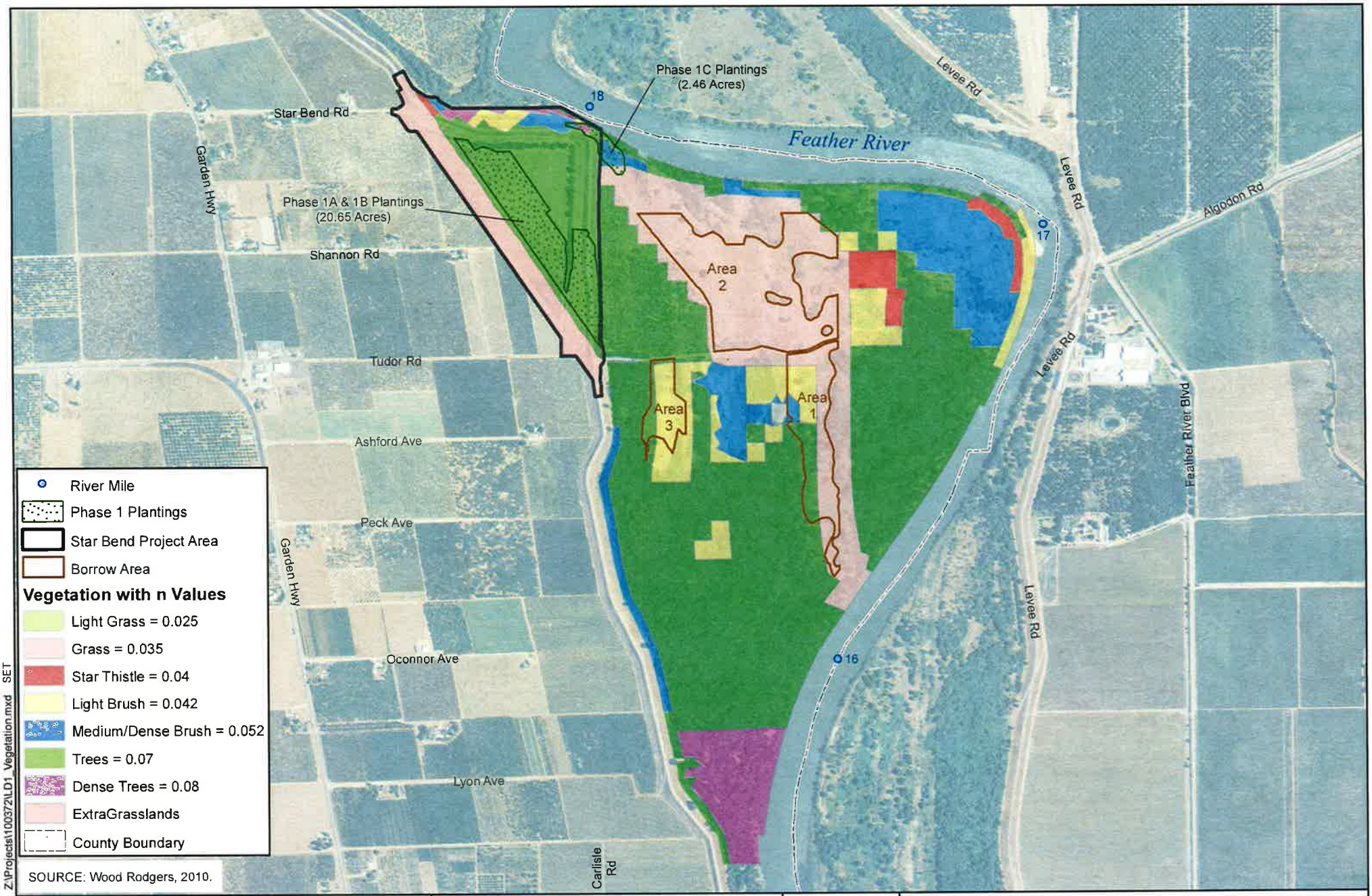

Supplement to Standard O&M Manual

Levee District One of Sutter County

GEI Consultants
Bookman-Edmonston Division

VEGETATION AND ASSOCIATED N-VALUES

JANUARY 2011 DRAFT FIGURE 8

30-Dec-2010 Z:\Projects\100372\LD1_Vegetation.mxd SET

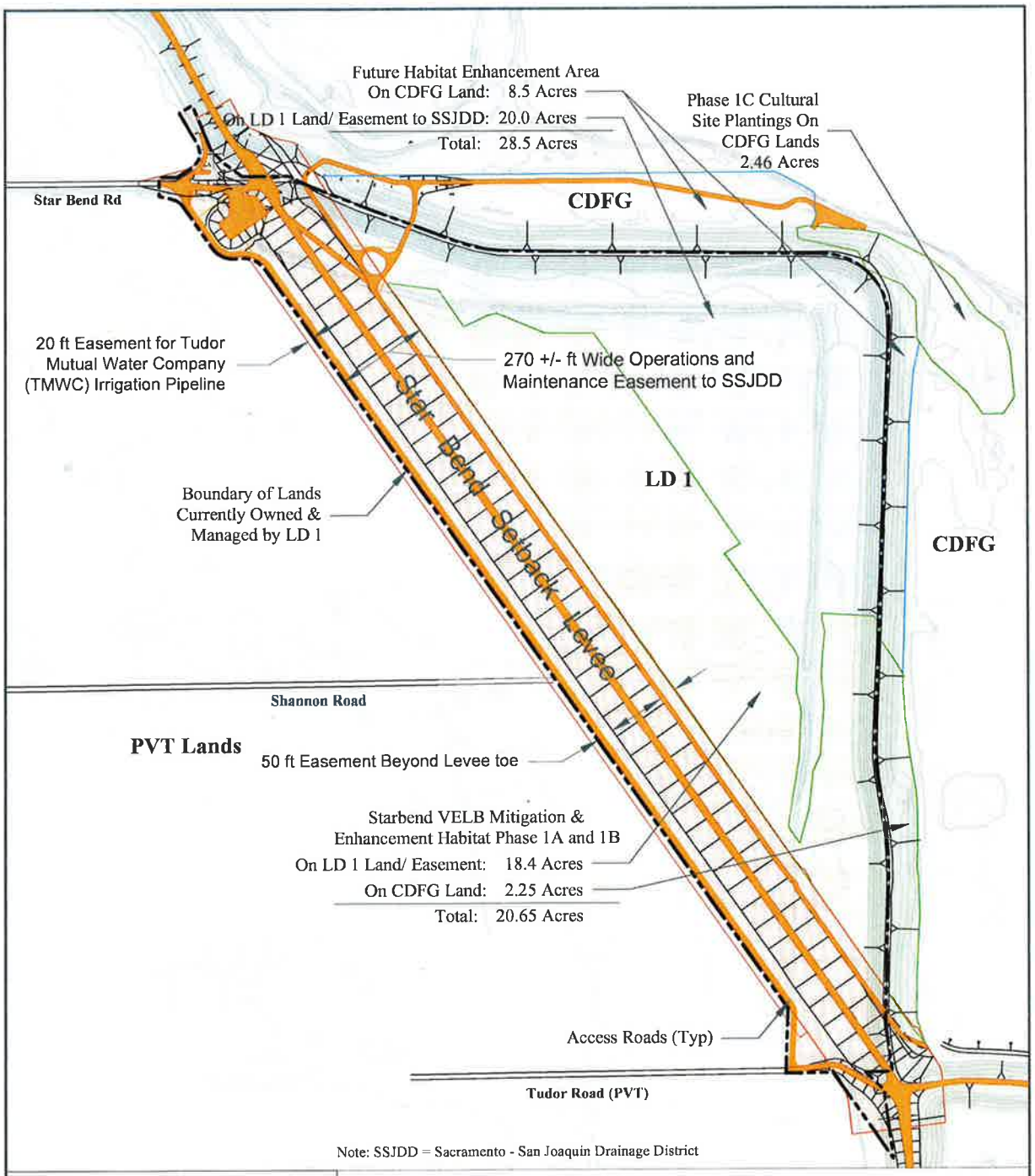

Note: SSJDD = Sacramento - San Joaquin Drainage District

Limits of Land Acquired for Starbend Setback Levee

Access Roads

Former Levee System Removed

N W E S

Lands Acquired by LD1 for Star Bend Setback Levee

(1)	Levee Footprint Area & 50 ft beyond landside and water toes of levee: Approximately 270 ft in width Fee Title by LD1 & Easement to SSJDD	21.0 Acres
(2)	Phase 1A &1B VELB Mitigation and Enhancement Area in Floodway Fee Title by LD1 & Easement to SJDD	18.4 Acres
(3)	Phase 2 Enhancement/ Mitigation/ Restoration Area in Floodway Fee Title by LD1 & Easement to SJDD	20.0 Acres
Total Acres of Fee Title Acquired by LD1 and Easement Conveyed to SSJDD and Others		59.4 Acres

150' 0 300'
Scale in Feet

Levee District 1 of Sutter County
Supplement to Standard O&M Manual

Levee District 1,
Yuba City, CA

GEI Consultants
Bookman Edmonston Division

Project 100372

Star Bend Setback Levee Area
Lands and Easements
Near River Mile 18.0

January 2011

Figure 9