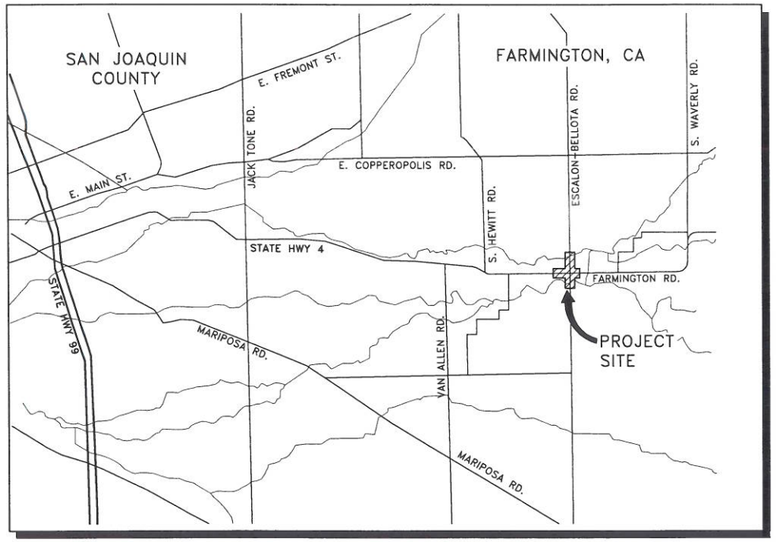

LOCATION MAP
NOT TO SCALE

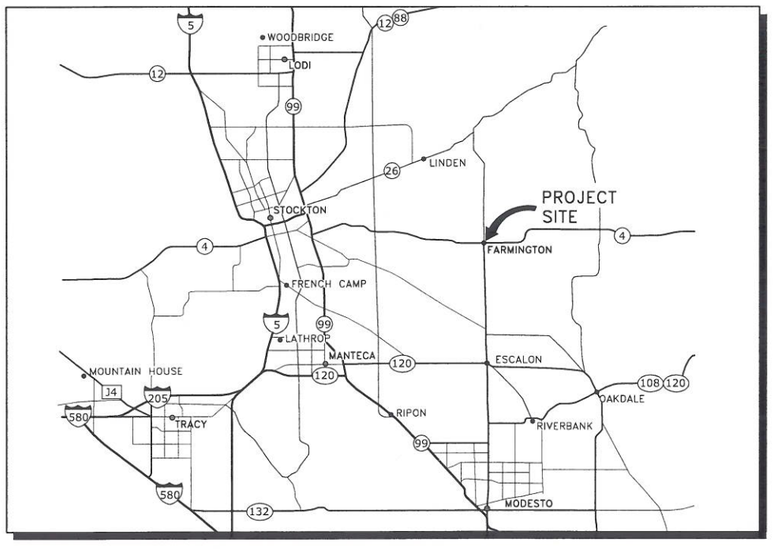

VICINITY MAP
NOT TO SCALE

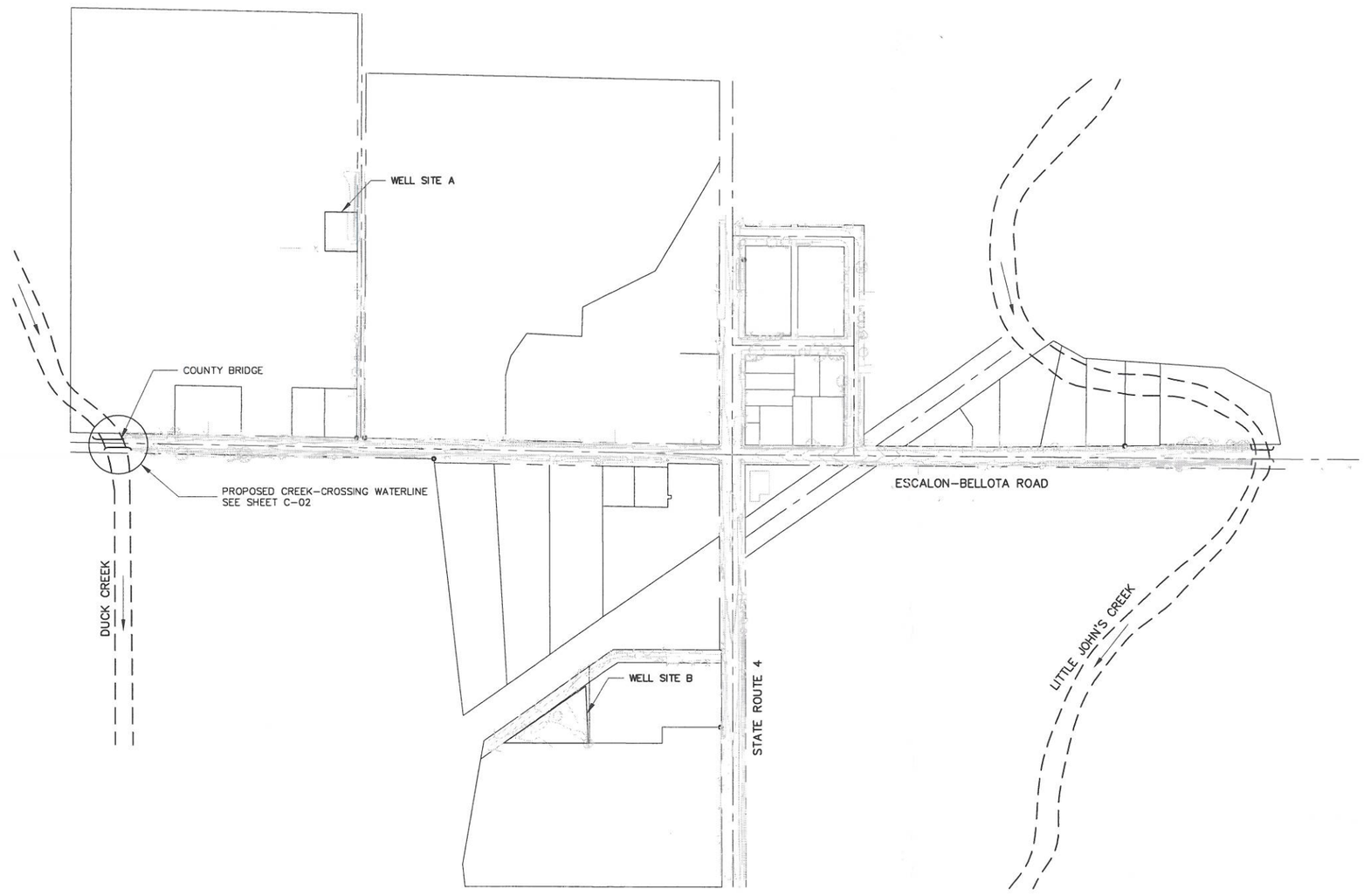

N
0' 200' 400'

CAUTION: The engineer preparing these plans will not be responsible for, or liable for, unauthorized changes to or uses of these plans. All changes to the plans must be in writing and must be approved by preparer of these plans.

N:\MTB014701\CADD\CREEK CROSSING\C01-COVER.DWG
1:41 PM
2/28/2011

NOLTE
BEYOND ENGINEERING
DENVER (303) 226-8400 · INLAND EMPIRE (909) 888-8522 · MANTECA (209) 239-9080 · SACRAMENTO (916) 631-8900 · SAN JOSE (408) 282-1200 · SAN DIEGO (858) 385-3550 · WALNUT CREEK (925) 934-8080
1215 WEST CENTER STREET, SUITE 201, MANTECA, CA 95337 (209) 239-9080

REGISTERED PROFESSIONAL ENGINEER Reid Johnson No. C49236 EXP. 9/30/10 CIVIL STATE OF CALIFORNIA

REGISTERED PROFESSIONAL ENGINEER David A. Zensius No. 59347 EXP. 6/30/11 CIVIL STATE OF CALIFORNIA

DATE: JANUARY 2011
PROJECT NO.: MTB014701
DRAWN BY: J. PETERSON
CHECKED BY: D. RICHARD
PROJ. MGR.: R. JOHNSON
PROJ. ENGR.: D. ZENSIUS

NO.	BY	DATE	REVISIONS

FARMINGTON WATER COMPANY
WATER SUPPLY PROJECT – CREEK CROSSING WATERLINES

CIVIL
DUCK CREEK WATERLINE CROSSING VICINITY AND LOCATION

SCALE: AS NOTED
DRAWING NUMBER: C01
SHEET NUMBER: 1 OF 2 SHEETS

NOTES:

1. STA 1+00 ON WATER SUPPLY PROJECT PLAN SHEET C-21 MATCHES STA 3+50 SHOWN ON THIS SHEET.
2. BORE PITS FOR DUCK CREEK CROSSING WATERLINE ARE TO BE IN SHOULDER OF RIGHT-OF-WAY, ADJACENT TO THE EDGE OF PAVEMENT.

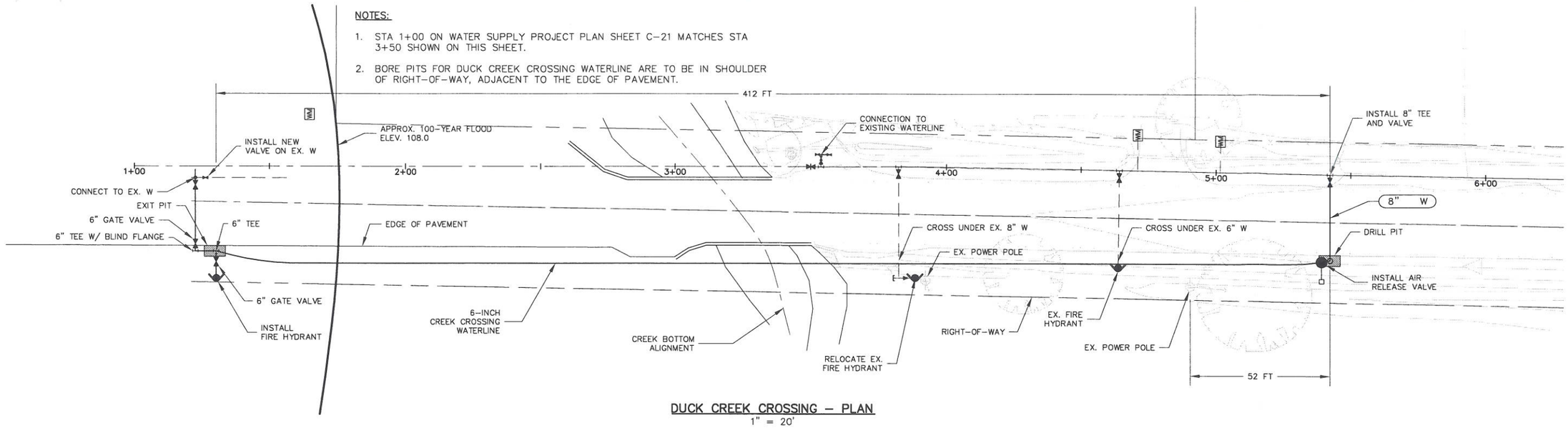

DUCK CREEK CROSSING – PLAN
1" = 20'

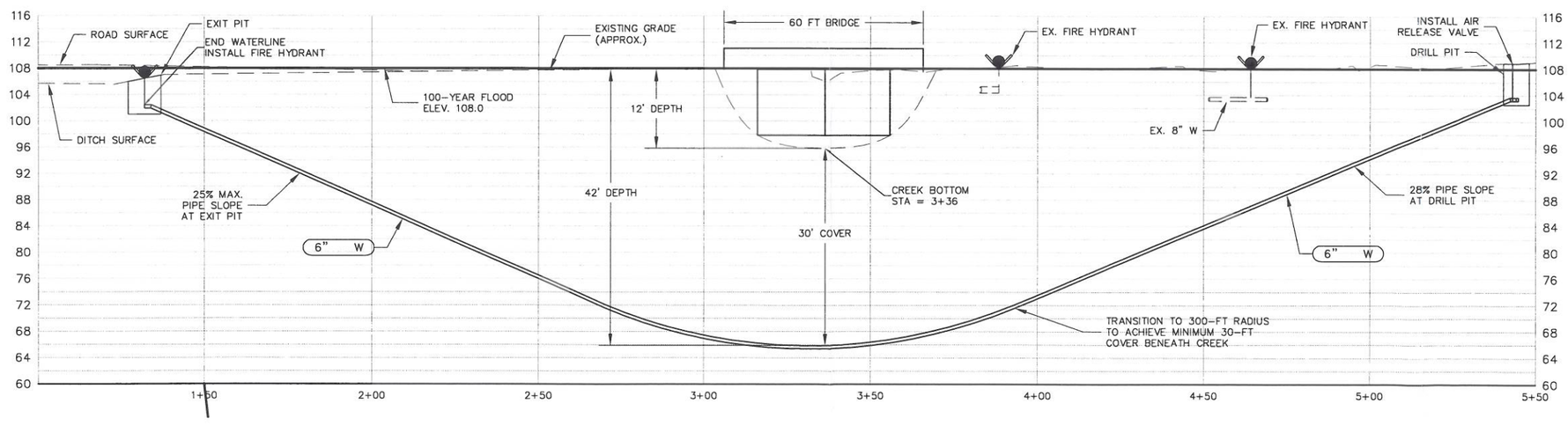

DUCK CREEK CROSSING – PROFILE

Z

0' 20' 40'

CAUTION: The engineer preparing these plans will not be responsible for, or liable for, unauthorized changes to or uses of these plans. All changes to the plans must be in writing and must be approved by preparer of these plans.

NOLTE
BEYOND ENGINEERING

☐ DENVER (303) 220-8400 ☐ INLAND EMPIRE (909) 300-8900 ■ MANTECA (209) 239-9080 ☐ SACRAMENTO (916) 641-9100 ☐ SAN JOSE (408) 782-7200 ☐ SAN DIEGO (858) 385-0900 ☐ WALNUT CREEK (925) 934-8400

1215 WEST CENTER STREET, SUITE 201, MANTECA, CA 95337 (209) 239-9080

REGISTERED PROFESSIONAL ENGINEER Reid Johnson No. C49236 EXP. 9/30/10 CIVIL STATE OF CALIFORNIA

REGISTERED PROFESSIONAL ENGINEER David A. Zensius No. 59347 EXP. 6/30/11 CIVIL STATE OF CALIFORNIA

DATE: JANUARY 2011
PROJECT NO.: MTB014701
DRAWN BY: J. PETERSON
CHECKED BY: D. RICHARD
PROJ. MGR.: R. JOHNSON
PROJ. ENGR.: D. ZENSIUS

NO.	BY	DATE	REVISIONS

FARMINGTON WATER COMPANY
WATER SUPPLY PROJECT – CREEK CROSSING WATERLINES

CIVIL

DUCK CREEK WATERLINE CROSSING
PLAN AND PROFILE

SCALE: AS NOTED
DRAWING NUMBER: C02
SHEET NUMBER: 2 OF 2 SHEETS

N:\MTB014701\CADD\CREEK CROSSING\C02 C03-PROFILES.DWG 2/28/2011 3:37 PM C02 C03-Profiles.dwg