Meeting of the Central Valley Flood Protection Board
January 25, 2019

Permit Staff Report

California Department of Transportation
Wadsworth Canal Bridge Replacement, Sutter County

1.0 – ITEM

Consider approval of Permit No. 19218 (Attachment A).

2.0 - APPLICANT

California Department of Transportation (Caltrans).

3.0 – PROJECT LOCATION

The project is located where State Route 20 (SR 20) crosses Wadsworth Canal, approximately 6.8 miles west of Yuba City and 1.3 miles east of the town of Sutter. (Wadsworth Canal, Sutter County, Attachment B)

4.0 – PROJECT DESCRIPTION

Caltrans proposes to:

- Remove the existing State Route 20 (SR 20) Bridge (No. 18-0003);
- Construct a new SR 20 Bridge (No. 18-0052) just upstream and north of the existing bridge. The bridge will be a five (5) span cast-in-place reinforced concrete slab bridge approximately 43 feet wide and 182 feet long, and;
- Construct the roadway approaches to the new bridge. (Attachment C)

5.0 – AUTHORITY OF THE BOARD

California Water Code § 8534, 8590 – 8610.5, and 8700 – 8710

California Code of Regulations, Title 23, Division 1 (Title 23):

- § 6, Need for a Permit
- § 13.3, Consent Calendar
- § 112, Streams Regulated and Nonpermissible Work Periods
- § 121, Erosion Control
- § 128, Bridges

6.0 - PROJECT ANALYSIS

Wadsworth Canal is part of the Sacramento River Flood Control System and is listed as a regulated stream in California Code of Regulations, Title 23, Division 1(Title 23), Section 112, Table 8.1. There are project levees on both sides of the Wadsworth Canal at the proposed project's location. The existing five span Wadsworth Canal Bridge was built in 1920 and widened in 1959 (Permit No. 3144). The existing vertical alignments and shoulder widths of the bridge do not meet current Caltrans bridge design standards. In addition, the bridge is thought to be seismically deficient and it has extensive corrosion and rust. The existing clearance between the design water surface elevation (DWSE) and the bottom members of the bridge is 0.9 feet. This is 2.1 feet less than required by current Title 23 standards. The proposed bridge will increase the clearance by 3.19 feet for a total clearance of 4.09 feet above the DWSE.

The new bridge will be constructed on lands owned by the Sacramento San Joaquin Drainage District (SSJDD). Possessory rights will be provided as either an easement or through a Transfer of Jurisdiction (TOJ) with reservations included that protect the existing and superior rights of SSJDD.

The proposed work consists of:

1. Constructing a new bridge on a new alignment north of the existing bridge alignment. The new bridge will be a five-span bridge and will have two abutments in the levee and four piers in the channel. The bridge will be approximately 43 feet wide and 182 feet long.
2. Rehabilitating pavement, realignment and widening of shoulders in both eastbound and westbound directions to align with the new bridge.
3. Removing the existing bridge after completion of the new bridge to include; removing piling, piers, abutments, footings, and pedestals.

The proposed project meets all applicable Title 23 standards.

6.1 – Hydraulic Analysis

A hydraulic analysis was performed to assess the potential hydraulic impacts due to the proposed bridge. The one-dimensional U.S. Army Corps of Engineers (USACE) Hydrologic Engineering Center-River Analysis System (HEC-RAS) program was used to assess the impacts. The analysis was done using the project design flow of 1,500 cubic feet-per-second (cfs) for Wadsworth Canal. The hydraulic analysis indicates there will be no rise in water surface elevation and no change in water velocity due to proposed project. The analysis also considered the hydraulic impacts from the falsework that will be installed within the floodway during construction. The analysis determined that the falsework would only increase the water surface elevation by 0.01 feet, which is considered to be insignificant. (Attachment D)

6.2 – Geotechnical Analysis

A geotechnical analysis was conducted at this location to determine the corrosion and engineering properties of the subsurface materials. The geotechnical analysis provided soil information for use in the design of the new Wadsworth Canal Bridge. The foundation report recommendations include predrilling holes prior to pile driving within the levee and using engineering fill materials for construction of new embankment.

Based on the geotechnical analysis, there are no anticipated negative impacts to the levee as a result of the proposed project.

7.0 – AGENCY COMMENTS AND ENDORSEMENTS

The comments and endorsements associated with this project, from all pertinent agencies, are shown below:

- The California Department of Water Resources, Division of Flood Management, Sutter Maintenance Yard endorsed the application on August 28, 2017 with no conditions.
- The USACE 33 U.S.C. 408 approval letter **has not yet been received** for this application. Staff anticipates receipt of a letter indicating that the USACE Sacramento District Engineer approves the request to alter the Federal flood risk reduction project, subject to conditions. Upon receipt of the letter, staff will review to ensure its conformity with the permit language and will attach the 408 approval letter to the permit as Exhibit A.

8.0 – CEQA ANALYSIS

Board staff has prepared the following California Environmental Quality Act (CEQA) determination:

The Board, acting as a responsible agency under CEQA, has independently reviewed the Sutter Bypass Widening and Rehabilitation Project, Initial Study/Mitigated Negative Declaration (IS/MND) (SCH No.: 2016062001, June 2016) and Mitigation Monitoring and Reporting Program prepared by the lead agency, Department of Transportation (Caltrans). These documents, including project design, may be viewed or downloaded from the Central Valley Flood Protection Board website at: http://cvfpb.ca.gov/event/january-2019-board-meeting/ under the link for this agenda item. These documents are also available for review in hard copy at the Board and Caltrans offices.

Caltrans determined the project would not have a significant effect on the environment and filed a Notice of Determination on December 6, 2016 with the State Clearinghouse. Board staff finds that although the proposed project could have a potentially significant effect on the environment, there will not be a significant effect in this case because revisions in the project have been made by or agreed to by the project proponent. The project proponent has incorporated mandatory mitigation measures into the project plans to avoid identified impacts or to mitigate such impacts to a point where no significant impacts will occur. These mitigation measures are included in the project proponent's IS/MND and address impacts to biological resources. The description of the mitigation measures are further described in the adopted IS/MND.

In accordance with CEQA Guidelines Section 15096(e), Board staff independently reviewed Caltrans' IS/MND, and finds these environmental documents prepared by the lead agency adequately address hydrology impacts, including potential flood risk, within the Board's jurisdiction. The Board, as a responsible agency, is responsible for mitigating and avoiding only the direct and indirect environmental effects of those parts of the project which it decides to carry out, finance, or approve (CEQA Guidelines § 15096(g); Public Resources Code § 21002.1(d)). In accordance with CEQA Guidelines Section 15096(f) and (g), staff recommends the Board make responsible agency findings that approval of Permit No. 19218 would not have a significant adverse impact and no additional mitigation measures within the Board's jurisdiction are required.

The documents and other materials which constitute the record of the Board's proceedings in this matter are in the custody of the Executive Officer, Central Valley Flood Protection Board, 3310 El Camino Avenue, Suite 170, Sacramento, California 95821.

9.0 – CA WATER CODE SECTION 8610.5 AND OTHER CONSIDERATIONS

1. Evidence that the Board admits into its record from any party, State or local public agency, or nongovernmental organization with expertise in flood or flood plain management:

   The Board will make its decision based on the evidence in the permit application and attachments, this staff report, and any other evidence presented by any individual or group.

2. The best available science that relate to the scientific issues presented by the executive officer, legal counsel, the Department of Water Resources or other parties that raise credible scientific issues.

   The accepted industry standards of hydrology and hydraulics for the work proposed under this permit as regulated by Title 23 have been applied to the review of this permit.

3. Effects of the decision on facilities of the State Plan of Flood Control (SPFC).

   The proposed project is expected to result in no adverse effects on any SPFC facilities because the proposed bridge does not change the existing hydraulic conditions of Wadsworth Canal. The new bridge improves the clearance between the DWSE and the bottom members of the bridge by 3.19 feet. The proposed project is consistent with the Central Valley Flood Protection Plan as it improves flood risk management and public safety due to the increased clearance of the bridge over the DWSE.

4. Effects of reasonable projected future events, including, but not limited to, changes in hydrology, climate, and development within the applicable watershed:

   There are no expected adverse effects to the proposed project from reasonable projected future events. The new bridge is not anticipated to result in any adverse hydraulic impacts as it increases the flowage area under the bridge by increasing the clearance between the DWSE and the bottom members of the bridge.

10.0 – STAFF RECOMMENDATION

Adopt:

- The CEQA findings: The Board, acting as a responsible agency under CEQA, has independently reviewed and considered the environmental documents prepared for the project. Approving the Permit 19218 would not result in any significant adverse impacts related to flood risk and no additional mitigation measures within the Board's jurisdiction are required.

Approve:

- Encroachment Permit No. 19218 in substantially the form provided in Attachment A; and,

Direct:

- The Executive Officer to take the necessary actions to execute the permit and file a CEQA Notice of Determination with the State Clearinghouse.

11.0 – LIST OF ATTACHMENTS

A. Draft Permit No. 19218
B. Location Maps and Photos
C. Construction Drawings
D. Hydraulic Profile Information

Reviewers:

Design Review:	Mauricio Meza, Engineer, Water Resources, Permitting Section
Environmental Review:	James Herota, Senior Environmental Scientist
Document Review:	Gary W. Lemon, P.E., Permitting Section Chief
	Kelly Soule, P.E., Operations Branch Chief
	Itzia Rivera, Environmental Services Section, Acting Chief
	Michael C. Wright, P.E., Acting Chief Engineer
Legal Review:	Jit Dua, Board Counsel

DRAFT

STATE OF CALIFORNIA
THE RESOURCES AGENCY

THE CENTRAL VALLEY FLOOD PROTECTION BOARD

PERMIT NO. 19218 BD

This Permit is issued to:

California Department of Transportation (Caltrans)
703 B Street
Marysville, California 95901

To remove the existing State Route 20 (SR 20) Bridge (Br. No18-0003) over Wadsworth Canal and construct a new SR 20 Bridge (Br. No18-0052) just upstream and north of the existing bridge. The roadway approaches will be realigned to match the new bridge which will be approximately 182-feet long and 43-feet wide.

The project is located approximately 6.8 miles west of Yuba City and 1.3 miles east of the town of Sutter, at 39.14213˚N 121.74291˚W, Sutter Maintenance Yard, Wadsworth Canal, Sutter County.

NOTE: Special Conditions have been incorporated herein which may place limitations on and/or require modification of your proposed project as described above.

(SEAL)

Dated: _____ _____
Executive Officer

GENERAL CONDITIONS:

ONE: This permit is issued under the provisions of Sections 8700 – 8723 of the Water Code.

TWO: Only work described in the subject application is authorized hereby.

THREE: This permit does not grant a right to use or construct works on land owned by the Sacramento and San Joaquin Drainage District or on any other land.

FOUR: The approved work shall be accomplished under the direction and supervision of the State Department of Water Resources, and the permittee shall conform to all requirements of the Department and The Central Valley Flood Protection Board.

FIVE: Unless the work herein contemplated shall have been commenced within one year after issuance of this permit, the Board reserves the right to change any conditions in this permit as may be consistent with current flood control standards and policies of The Central Valley Flood Protection Board.

SIX: This permit shall remain in effect until revoked. In the event any conditions in this permit are not complied with, it may be revoked on 15 days' notice.

SEVEN: It is understood and agreed to by the permittee that the start of any work under this permit shall constitute an acceptance of the conditions in this permit and an agreement to perform work in accordance therewith.

EIGHT: This permit does not establish any precedent with respect to any other application received by The Central Valley Flood Protection Board.

NINE: The permittee shall, when required by law, secure the written order or consent from all other public agencies having jurisdiction.

TEN: The permittee is responsible for all personal liability and property damage which may arise out of failure on the permittee's part to perform the obligations under this permit. If any claim of liability is made against the State of California, or any departments thereof, the United States of America, a local district or other maintaining agencies and the officers, agents or employees thereof, the permittee shall defend and shall hold each of them harmless from each claim.

ELEVEN: The permittee shall exercise reasonable care to operate and maintain any work authorized herein to preclude injury to or damage to any works necessary to any plan of flood control adopted by the Board or the Legislature, or interfere with the successful execution, functioning or operation of any plan of flood control adopted by the Board or the Legislature.

TWELVE: Should any of the work not conform to the conditions of this permit, the permittee, upon order of The Central Valley Flood Protection Board, shall in the manner prescribed by the Board be responsible for the cost and expense to remove, alter, relocate, or reconstruct all or any part of the work herein approved.

SPECIAL CONDITIONS FOR PERMIT NO. 19218 BD

THIRTEEN: General condition THREE does not apply to this permit.

LIABILITY AND INDEMNIFICATION

FOURTEEN: The permittee shall defend, indemnify, and hold harmless the Central Valley Flood Protection Board (Board), the Department of Water Resources, and their respective officers, agents, employees, and representatives (Indemnities), against any and all claims, liabilities, charges, losses, expenses, and costs including the State's attorneys' fees (Liabilities), that may arise from, or by reason of: (1) any action or inaction by the Indemnities in connection with the issuance or denial of any permit, lease, permit, or other entitlement; (2) as a result of approvals or authorizations given by the Board to the permittee pursuant to, or as a result of, permittee's permit application; (3) provisions of the issued permit or lease, provisions of CEQA, an environmental document certified or adopted by the Board related to the permit application, or any other regulations, requirements, or programs by the State, except for any such Liabilities caused solely by the gross negligence or intentional acts or the State or its officers, agents, and employees.

FIFTEEN: The permittee is responsible for all liability associated with construction, operation, and maintenance of the permitted facilities and shall defend, indemnify, and hold the Board, the Department of Water Resources, and their respective officers, agents, employees, successors and assigns, safe and harmless, of and from all claims and damages arising from the project undertaken pursuant to this permit, all to the extent allowed by law. The Board and the Department of Water Resources expressly reserve the right to supplement or take over their defense, in their sole discretion.

SIXTEEN: The Board and the Department of Water Resources shall not be held liable for any damages to the permitted encroachment(s) resulting from releases of water from reservoirs, flood fight, operation, maintenance, inspection, or emergency repair.

AGENCY CONDITIONS

SEVENTEEN: All work approved by this permit shall be in accordance with the submitted drawings and specifications dated October 19, 2018 except as modified by special permit conditions herein. No further work, other than that approved by this permit, shall be done in the area without prior approval of the Board.

EIGHTEEN: Permittee shall pay to the Board, an inspection fee(s) to cover inspection cost(s), including staff and/or consultant time and expenses, for any inspections before, during, post-construction, and regularly thereafter as deemed necessary by the Board.

NINETEEN: In the event that levee or bank erosion injurious to the adopted plan of flood control occurs at or adjacent to the permitted encroachment(s), the permittee shall repair the eroded area and propose measures, to be approved by the Board, to prevent further erosion.

TWENTY: The permittee shall be responsible for the repair of any damages to the project levee, channel, banks, floodway, or other flood control facilities due to construction, operation, or maintenance of the proposed project.

TWENTY-ONE: The permittee shall comply with all conditions set forth in the letter from the Department of the Army (U.S. Army Corps of Engineers, Sacramento District) dated _____, which is attached to this permit as Exhibit __ and is incorporated by reference.

TWENTY-TWO: The permittee agrees to notify new property/encroachment owner(s) that they are required to submit a permit Name Change request form to the Board upon completion of the sale. The new owner(s) will be required to comply with all permit conditions. Name Change forms are available at http://cvfpb.ca.gov/

TWENTY-THREE: The Board reserves the right to add additional, or modify existing, conditions when there is a change in ownership and/or maintenance responsibility of the work authorized under this permit.

TWENTY-FOUR: The permittee shall coordinate with the Board's Right of Way Staff to acquire the real property rights from the Sacramento San Joaquin Drainage District (SSJDD) for all land owned in fee by the SSJDD that is required to construct the new bridge.

PRE-CONSTRUCTION

TWENTY-FIVE: Upon receipt of a signed copy of the issued permit the permittee shall contact the Board by telephone at (916) 574-0609, and submit the enclosed postcard, to schedule a preconstruction conference with the inspector that is assigned to your project. Failure to do so at

least 10 working days prior to start of work may result in a delay of the project.

CONSTRUCTION

TWENTY-SIX: No construction work of any kind shall be done during the flood season from November 1 to April 15 without prior approval of the Board. Failure to submit a Time Variance Request to the Board at least 10 working days prior to November 1 may result in a delay of the project.

TWENTY-SEVEN: No material stockpiles, temporary buildings, or equipment (except falsework) shall remain in the floodway during the flood season from November 1 to April 15.

TWENTY-EIGHT: The dismantled bridge shall be completely removed and disposed of outside the limits of the levee section and Wadsworth Canal floodway and off project works.

TWENTY-NINE: Piers, bents, and abutments being dismantled shall be removed to at least 1 foot below the natural ground line and at least 3 feet below the bottom of the low-water channel.

THIRTY: Backfill material for excavations within the levee section and within 10 feet of bridge supports within the floodway shall be placed in 4- to 6-inch layers and compacted to a minimum of 90 percent relative compaction as measured by the current ASTM D1557 standard and above optimum moisture content.

THIRTY-ONE: Compaction tests by a certified soils laboratory will be required to verify compaction of backfill within the levee section or within 10 feet of the levee toe.

THIRTY-TWO: The soffit of the bridge shall be a minimum of 3 feet above the flood plane elevation of 55.1 feet, NAVD88 Datum.

THIRTY-THREE: Drainage from new bridge shall not be discharged onto the levee section or streambank.

POST-CONSTRUCTION

THIRTY-FOUR: All debris generated by this project shall be properly disposed of outside the limits of the levee section and Wadsworth Canal floodway and off project works.

THIRTY-FIVE: The work area shall be restored to at least the condition that existed prior to commencement of work.

THIRTY-SIX: Trees, brush, sediment, and other debris shall be kept cleared from the bridge site and disposed of outside the floodway to maintain the design flow capacity and flowage area.

THIRTY-SEVEN: Upon completion of the project, the permittee shall submit an electronic copy of the as-constructed drawings to the Board.

OPERATIONS AND MAINTENANCE

THIRTY-EIGHT: After each period of high water, debris that accumulates at the site shall be completely removed from the floodway.

THIRTY-NINE: The permitted encroachment(s) shall not interfere with the operation and maintenance of the flood control project. If the permitted encroachment(s) are determined by any agency responsible for operation or maintenance of the flood control project to interfere, the permittee shall be required, at permittee's cost and expense, to modify or remove the permitted encroachment(s) within 30-days of being notified in writing by the Board. In the event of an emergency a shorter timeframe may be required. If the permittee does not comply, the Board, or a designated agency or company authorized by the Board, may modify or remove the encroachment(s) at the permittee's expense.

PROJECT ABANDONMENT / CHANGE IN PLAN OF FLOOD CONTROL

FORTY: If the project, or any portion thereof, is to be abandoned in the future, the permittee or successor shall abandon the project under direction of the Board at the permittee's or successor's cost and expense.

FORTY-ONE: The permittee may be required, at permittee's cost and expense, to remove, alter, relocate, or reconstruct all or any part of the permitted encroachment(s) if in the discretion of the Board the removal, alteration, relocation, or reconstruction is necessary as part of or in conjunction with any present or future flood control plan or project or if the project is not maintained or is damaged by any cause. The permittee shall remove the encroachment(s) within 30-days of being notified in writing by the Board. In the event of an emergency a shorter timeframe may be required. If the permittee does not comply the Board will remove the encroachment(s) at the permittee's expense.

END OF CONDITIONS

Project Location
19218 - Caltrans Wadsworth Canal Bridge Replacement
Sunset
Tambo
Mello
Dantoni
Tierra Buena
Willow Island
Marysville
Yuba City
Linda
Sutter
West Butte
South Yuba City
Olivehurst
Meridian
Pearson
Arboga
Sutter Bypass
Wadsworth Canal
Colusa Hwy
Oroville Hwy
Browns Valley Rd
Levee Rd
Golden State Hwy
Sawtelle
20
70
99
© 2018 Google
Google Earth

Project Location
19218 - Caltrans Wadsworth Canal Bridge Replacement
Wadsworth Canal
Wadsworth Canal
Sutter
Washington St
W Ridge Dr
Perry St
Lyon St
Marshall St
2nd Ave
3rd Ave
1st Ave
California St
Palm St
Pepper St
Mulberry St
Locust St
S Butte Rd
Colusa Hwy
Lyle Rd
Acacia Ave
Humphrey Rd
20
© 2018 Google
Google Earth

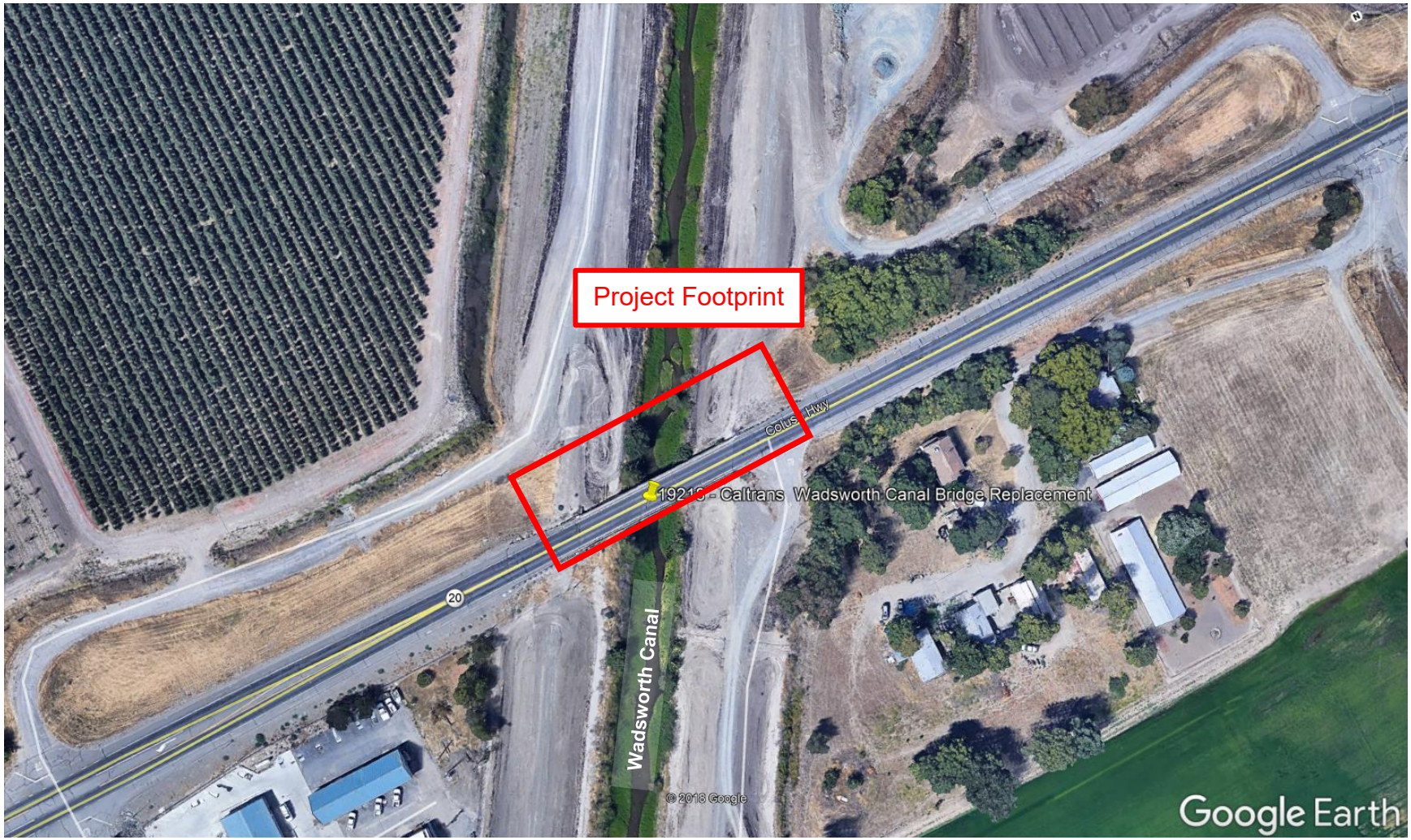
Project Footprint
Colusa Hwy
19218 - Caltrans Wadsworth Canal Bridge Replacement
20
Wadsworth Canal
© 2018 Google
Google Earth

Project Location
19218 - Caltrans Wadsworth Canal Bridge Replacement
Sunset
Tambo
Mello
Dantoni
Tierra Buena
Willow Island
Marysville
Yuba City
Linda
Sutter
West Butte
South Yuba City
Olivehurst
Meridian
Pearson
Arboga
Sutter Bypass
Wadsworth Canal
Colusa Hwy
Oroville Hwy
Browns Valley Rd
Levee Rd
Golden State Hwy
Sawtelle
20
70
99
© 2018 Google
Google Earth

Project Location
19218 - Caltrans Wadsworth Canal Bridge Replacement
Wadsworth Canal
Wadsworth Canal
Sutter
Washington St
W Ridge Dr
Perry St
Lyon St
Marshall St
2nd Ave
3rd Ave
1st Ave
California St
Palm St
Pepper St
Mulberry St
Locust St
S Butte Rd
Colusa Hwy
Lyle Rd
Acacia Ave
Humphrey Rd
20
© 2018 Google
Google Earth

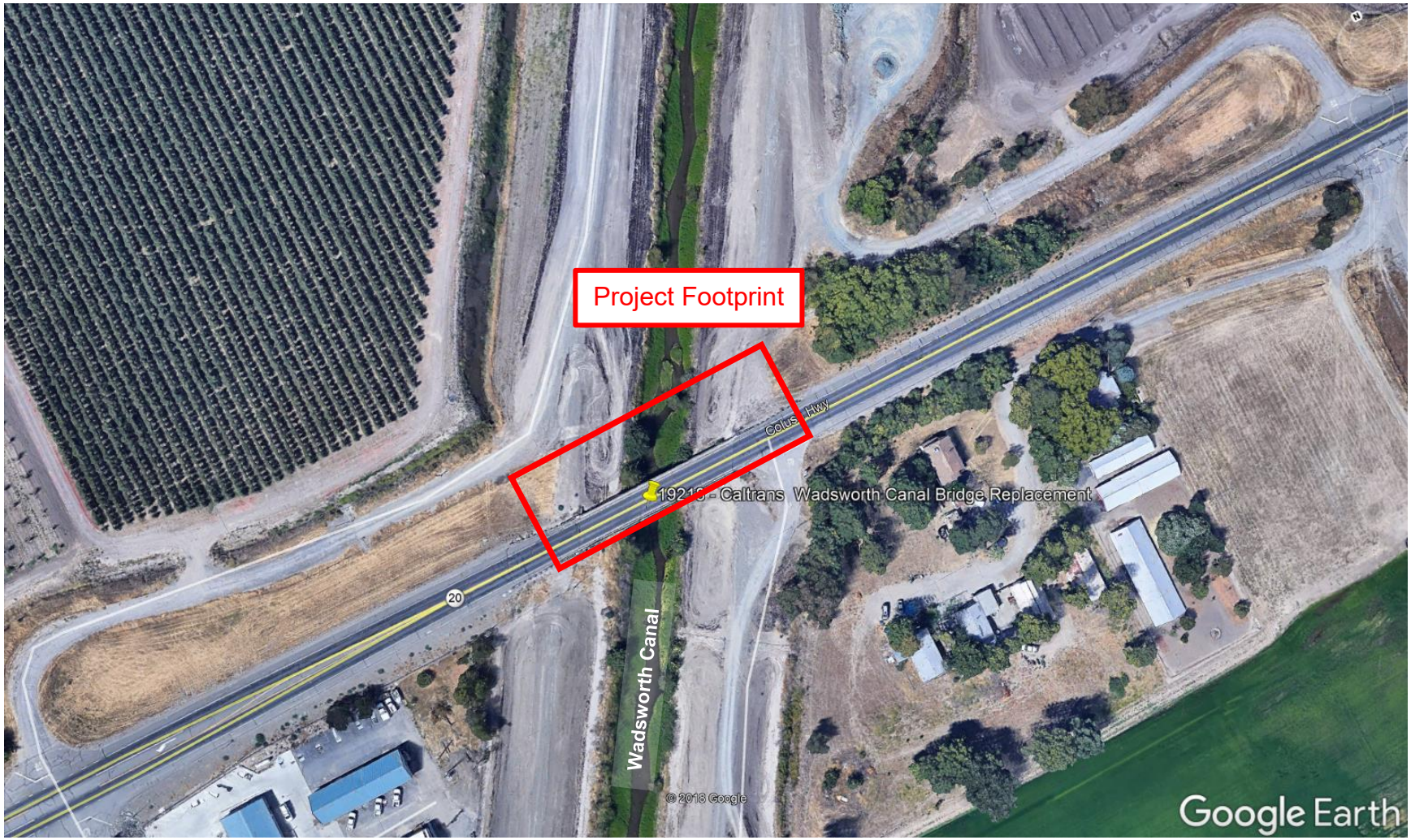
Project Footprint
Colusa Hwy
19218 - Caltrans Wadsworth Canal Bridge Replacement
20
Wadsworth Canal
© 2018 Google
Google Earth

Photo 1: Wadsworth Canal Bridge North side view at Route 20 PM 9.76
(New Bridge is proposed on North side of this existing Bridge#18-0003)

Photo 2: Levee access road at North West corner of the bridge- B3 Alignment on the plan

Photo 3: Levee access road at South/East corner of the bridge- B5 Alignment on the plan

Photo 4: Levee Access road at North/East corner of the bridge-B4 Alignment on the plan

No. 19218 - Attachment C - Construction Drawings

DIST	COUNTY	ROUTE	POST MILES TOTAL PROJECT	SHEET No.	TOTAL SHEETS
03	Sut	20	5.0/11.3	????	####

REGISTERED CIVIL ENGINEER — DATE 12-8-17

PLANS APPROVAL DATE

REGISTERED PROFESSIONAL ENGINEER — Eduardo Jose Ortega Jr. — No. 77226 — Exp. 06/30/19 — CIVIL — STATE OF CALIFORNIA

THE STATE OF CALIFORNIA OR ITS OFFICERS OR AGENTS SHALL NOT BE RESPONSIBLE FOR THE ACCURACY OR COMPLETENESS OF SCANNED COPIES OF THIS PLAN SHEET.

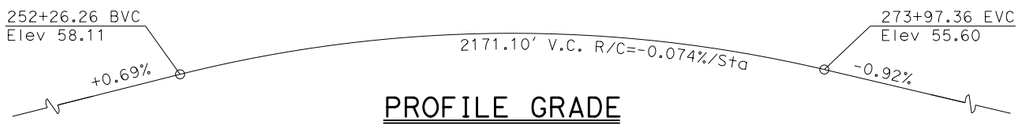

PROFILE GRADE

NO SCALE

QUANTITIES

STRUCTURE EXCAVATION (BRIDGE)	90	CY
STRUCTURE BACKFILL (BRIDGE)	60	CY
FURNISH PILING (CLASS 90) (ALTERNATIVE V)	845	LF
DRIVE PILE (CLASS 90) (ALTERNATIVE V)	16	EA
FURNISH PILING (CLASS 140) (ALTERNATIVE V)	2,839	LF
DRIVE PILE (CLASS 140) (ALTERNATIVE V)	32	EA
STRUCTURAL CONCRETE, BRIDGE	75	CY
STRUCTURAL CONCRETE, BRIDGE (POLYMER FIBER)	477	CY
BAR REINFORCING STEEL (BRIDGE)	108,651	LB
CLEAN AND PAINT PILING	LUMP	SUM
BRIDGE REMOVAL	LUMP	SUM
MISCELLANEOUS METAL (BRIDGE)	143	LB
TUBULAR BICYCLE RAILING	417	LF
CONCRETE BARRIER (TYPE 736)	417	LF

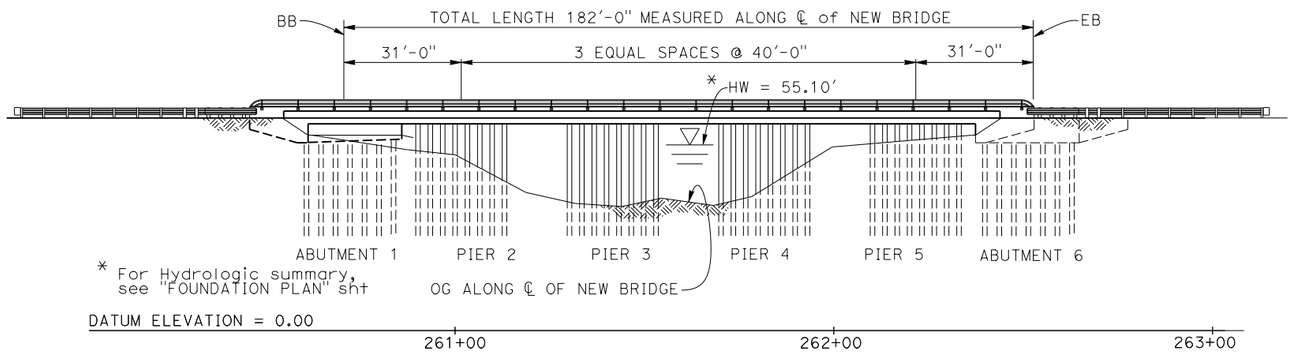

ELEVATION

1" = 20'

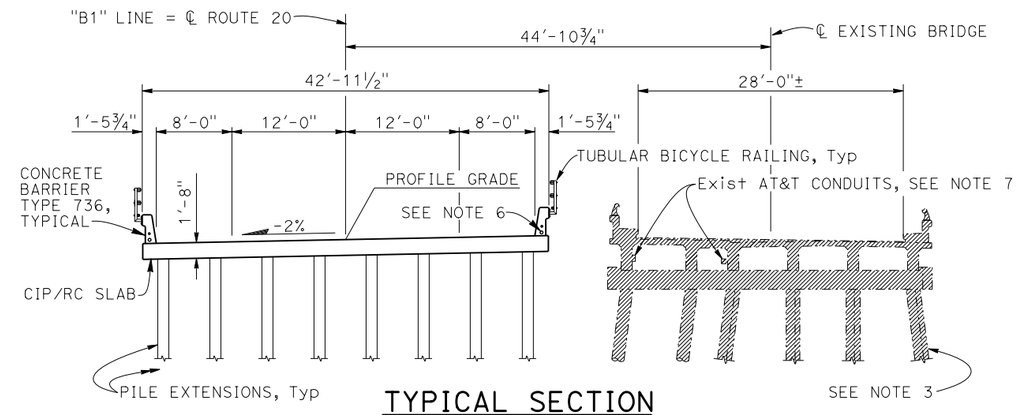

TYPICAL SECTION

⅛" = 1'-0"

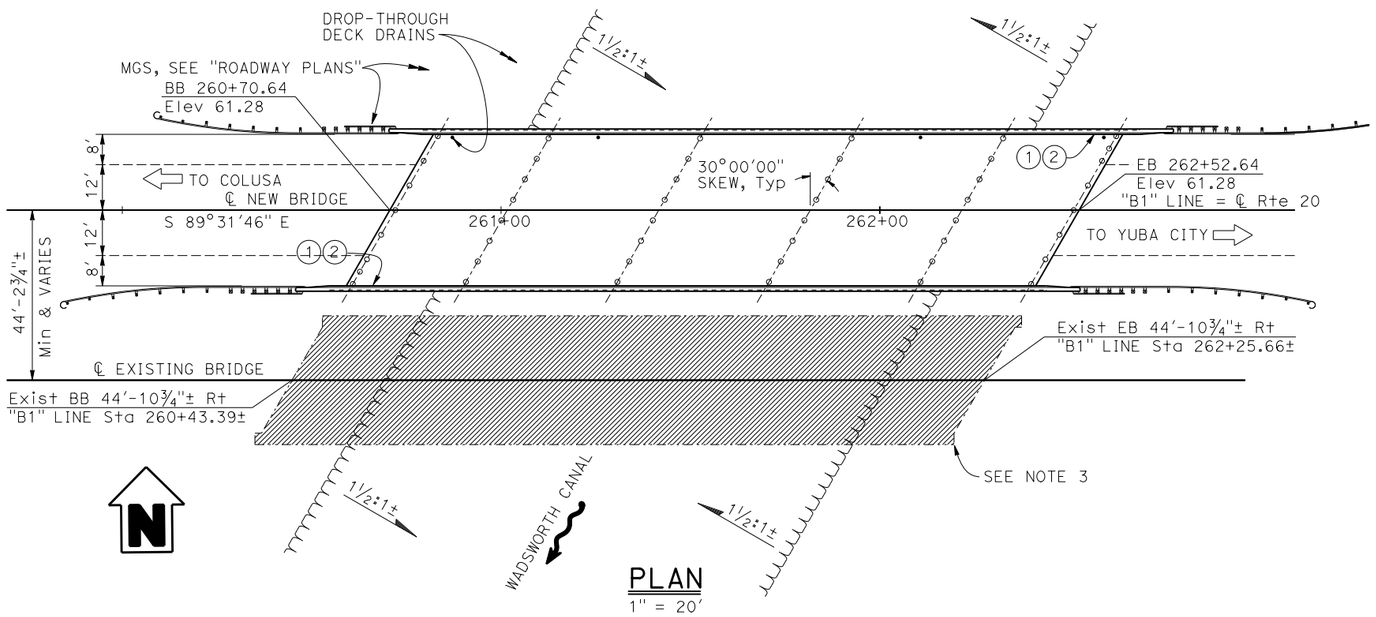

PLAN

1" = 20'

NOTES:

1. Paint "Br. No. 18-0052"
2. Paint "Wadsworth Canal Br."
3. Existing Bridge No. 18-0003 to be removed
4. For Index to Plans and General Notes, see "INDEX TO PLANS" sheet
5. AT&T will relocate utilities away from new bridge
6. 2"Ø and 3"Ø electrical conduits in bridge railing, see "ROADWAY PLANS"

LEGEND:

Indicates existing bridge removal

Indicates existing structure

Gary Joe
DESIGN ENGINEER

	BY	CHECKED
DESIGN	E. Ortega Jr.	D. Desai
DETAILS	A. Onodera	D. Desai
QUANTITIES	E. Ortega Jr.	D. Desai

LOAD & RESISTANCE FACTOR DESIGN — LIVE LOADING: HL93 W/"LOW-BOY": PERMIT DESIGN VEHICLE

	BY	CHECKED
LAYOUT	E. Ortega Jr.	D. Desai
SPECIFICATIONS	D. Vargas	PLANS AND SPECS COMPARED D. Vargas

ORIGINAL SCALE IN INCHES FOR REDUCED PLANS 0 1 2 3

STATE OF CALIFORNIA
DEPARTMENT OF TRANSPORTATION

DIVISION OF ENGINEERING SERVICES
STRUCTURE DESIGN
DESIGN BRANCH 17

BRIDGE NO. 18-0052
POST MILE 9.76

WADSWORTH CANAL BRIDGE (REPLACE)
GENERAL PLAN

UNIT: 3586
PROJECT NUMBER & PHASE: 03000206084
CONTRACT NO.: 03-1A9204

DISREGARD PRINTS BEARING EARLIER REVISION DATES

REVISION DATES: 5-8-17, 9-22-17, 12-26-17, 2-23-18

SHEET 1 OF 14

STRUCTURES DESIGN GENERAL PLAN SHEET (ENGLISH) (REV. 12/16/16)

FILE => 18-0052-a-gp01.dgn

USERNAME => s106056 DATE PLOTTED => 18-DEC-2018 TIME PLOTTED => 08:56

No. 19218 - Attachment C - Construction Drawings

Dist	COUNTY	ROUTE	POST MILES TOTAL PROJECT	SHEET No.	TOTAL SHEETS
03	Sut	20	5.0/11.3	????	####

REGISTERED CIVIL ENGINEER — DATE 12-8-17

PLANS APPROVAL DATE

REGISTERED PROFESSIONAL ENGINEER — Eduardo Jose Ortega Jr. — No. 77226 — Exp. 06/30/19 — CIVIL — STATE OF CALIFORNIA

THE STATE OF CALIFORNIA OR ITS OFFICERS OR AGENTS SHALL NOT BE RESPONSIBLE FOR THE ACCURACY OR COMPLETENESS OF SCANNED COPIES OF THIS PLAN SHEET.

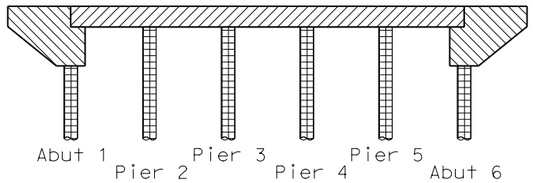

RSP B2-5 Alt "V"

Structural Concrete, Bridge (Polymer Fiber)(3,600 psi at 28 days)
Structural Concrete, Bridge
Steel Pipe Filled with Concrete Pile

CONCRETE STRENGTH AND TYPE LIMITS

NO SCALE

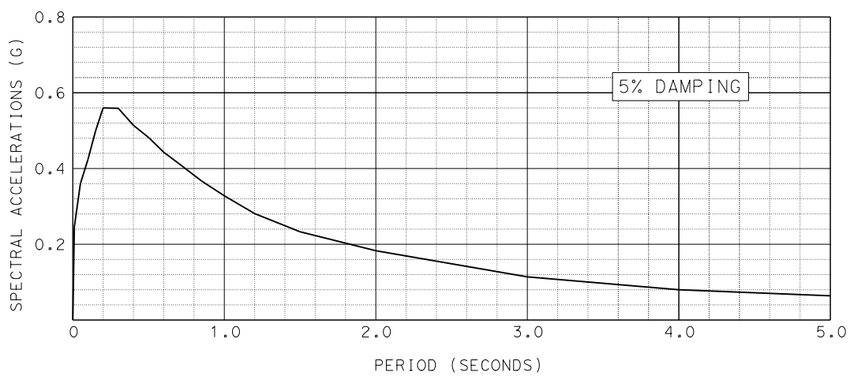

SITE SPECIFIC ACCELERATION RESPONSE SPECTRA

NO SCALE

INDEX TO PLANS

SHEET NO.	TITLE
1	GENERAL PLAN
2	INDEX TO PLANS
3	DECK CONTOURS
4	FOUNDATION PLAN
5	ABUTMENT LAYOUT
6	ABUTMENT DETAILS
7	PIER DETAILS
8	TYPICAL SECTION
9	SLAB REINFORCEMENT
10	SLAB REINFORCEMENT DETAILS
11	TUBULAR BICYCLE RAILING DETAILS
12	MISCELLANEOUS DETAILS
13	LOG OF TEST BORINGS 1 OF 2
14	LOG OF TEST BORINGS 2 OF 2

STANDARD PLANS DATED 2018

A3A	ABBREVIATIONS (SHEET 1 OF 3)
A3B	ABBREVIATIONS (SHEET 2 OF 3)
A3C	ABBREVIATIONS (SHEET 3 OF 3)
A10A	LEGEND-LINES AND SYMBOLS (SHEET 1 OF 5)
A10B	LEGEND-LINES AND SYMBOLS (SHEET 2 OF 5)
A10C	LEGEND-LINES AND SYMBOLS (SHEET 3 OF 5)
A10D	LEGEND-LINES AND SYMBOLS (SHEET 4 OF 5)
A10E	LEGEND-LINES AND SYMBOLS (SHEET 5 OF 5)
A10F	LEGEND-SOIL (SHEET 1 OF 2)
A10G	LEGEND-SOIL (SHEET 2 OF 2)
A10H	LEGEND-ROCK
A62C	LIMITS OF PAYMENT FOR EXCAVATION AND BACKFILL - BRIDGE
RSP BO-1	BRIDGE DETAILS
BO-3	BRIDGE DETAILS
BO-5	BRIDGE DETAILS
RSP B2-5	PILE DETAILS - CLASS 90 AND CLASS 140
B7-5	DECK DRAINS
B11-56	CONCRETE BARRIER TYPE 736

RSP=REVISED STANDARD PLAN

STANDARD PLAN SHEET NO.

DETAIL NO.

GENERAL NOTES - LOAD AND RESISTANCE FACTOR DESIGN

DESIGN:
AASHTO LRFD Bridge Design Specifications,
2012 Sixth Edition and the California Amendments
January 2014

SEISMIC DESIGN:
Acceleration Response Spectrum for soil of
Vs30=890 ft/sec. Mmax=7.0 PGA=0.25g

DEAD LOAD:
Includes 35 psf for future wearing surface

LIVE LOADING:
HL93 and permit design load

CONCRETE:
fy = 60 ksi
f'c = 3.6 ksi
n = 8

PILE DATA TABLE

RSP B2-5

LOCATION	PILE TYPE	CUT-OFF ELEVATION (ft)	NOMINAL RESISTANCE (Kips)		DESIGN TIP ELEVATION (ft)	SPECIFIED TIP ELEVATION (ft)	REQUIRED NOMINAL DRIVING RESISTANCE (Kips)
			Compression	Tension			
Abut 1	Class 90, Alt "V"	54.45	160	0	+3.0(a)	+3.0	160
Pier 2 ✳	Class 140, Alt "V"	59.34 Min & Var	250	0	-24.0(a)	-24.0	250
Pier 3 ✳	Class 140, Alt "V"	59.34 Min & Var	250	0	-34.0(a)	-34.0	280
Pier 4 ✳	Class 140, Alt "V"	59.34 Min & Var	250	0	-34.0(a)	-34.0	280
Pier 5 ✳	Class 140, Alt "V"	59.34 Min & Var	250	0	-24.0(a)	-24.0	250
Abut 6	Class 90, Alt "V"	54.45	160	0	+3.0(a)	+3.0	160

NOTES: Design Tip controlled by (a) Compression, (b) Tension, (c) Lateral Load

✳ Pile cut-off elevation shown for the left outside pile of the Pier.

DESIGN	BY E. Ortega Jr.	CHECKED D. Desai	
DETAILS	BY A. Onodera	CHECKED D. Desai	
QUANTITIES	BY E. Ortega Jr.	CHECKED D. Desai	

STATE OF CALIFORNIA
DEPARTMENT OF TRANSPORTATION

DIVISION OF ENGINEERING SERVICES
STRUCTURE DESIGN
DESIGN BRANCH 17

BRIDGE No. 18-0052
POST MILE 9.76

WADSWORTH CANAL BRIDGE (REPLACE)
INDEX TO PLANS

STRUCTURES DESIGN DETAIL SHEET (ENGLISH) (REVISION 3/17/2017)

DATE PLOTTED => 18-DEC-2018 TIME PLOTTED => 08:56
FILE => 18-0052-a-itp.dgn USERNAME => s106056
ORIGINAL SCALE IN INCHES FOR REDUCED PLANS 0 1 2 3

UNIT: 3586
PROJECT NUMBER & PHASE: 03000206084
CONTRACT No.: 03-1A9204

DISREGARD PRINTS BEARING EARLIER REVISION DATES

REVISION DATES: 11-13-17 7-14-17 8-16-17 9-29-17

SHEET 2 OF 14

DIST	COUNTY	ROUTE	POST MILES TOTAL PROJECT	SHEET No.	TOTAL SHEETS
03	Sut	20	5.0/11.3	????	####

REGISTERED CIVIL ENGINEER — DATE 12-8-17

PLANS APPROVAL DATE

REGISTERED PROFESSIONAL ENGINEER — Eduardo Jose Ortega Jr. — No. 77226 — Exp. 06/30/19 — CIVIL — STATE OF CALIFORNIA

The State of California or its officers or agents shall not be responsible for the accuracy or completeness of electronic copies of this plan sheet.

CURVE DATA

No. ⊛	R	Δ	T	L
1	22000.00	02°16'40"	437.34	874.57

SCOUR DATA TABLE

SUPPORT No.	LONG TERM (DEGRADATION AND CONTRACTION) SCOUR ELEVATION (Ft)	SHORT TERM (LOCAL) SCOUR DEPTH (Ft)
ABUTMENT 1	57.10	0
PIER 2	49.59	0
PIER 3	37.32	5.3
PIER 4	37.32	5.3
PIER 5	49.59	0
ABUTMENT 6	57.10	0

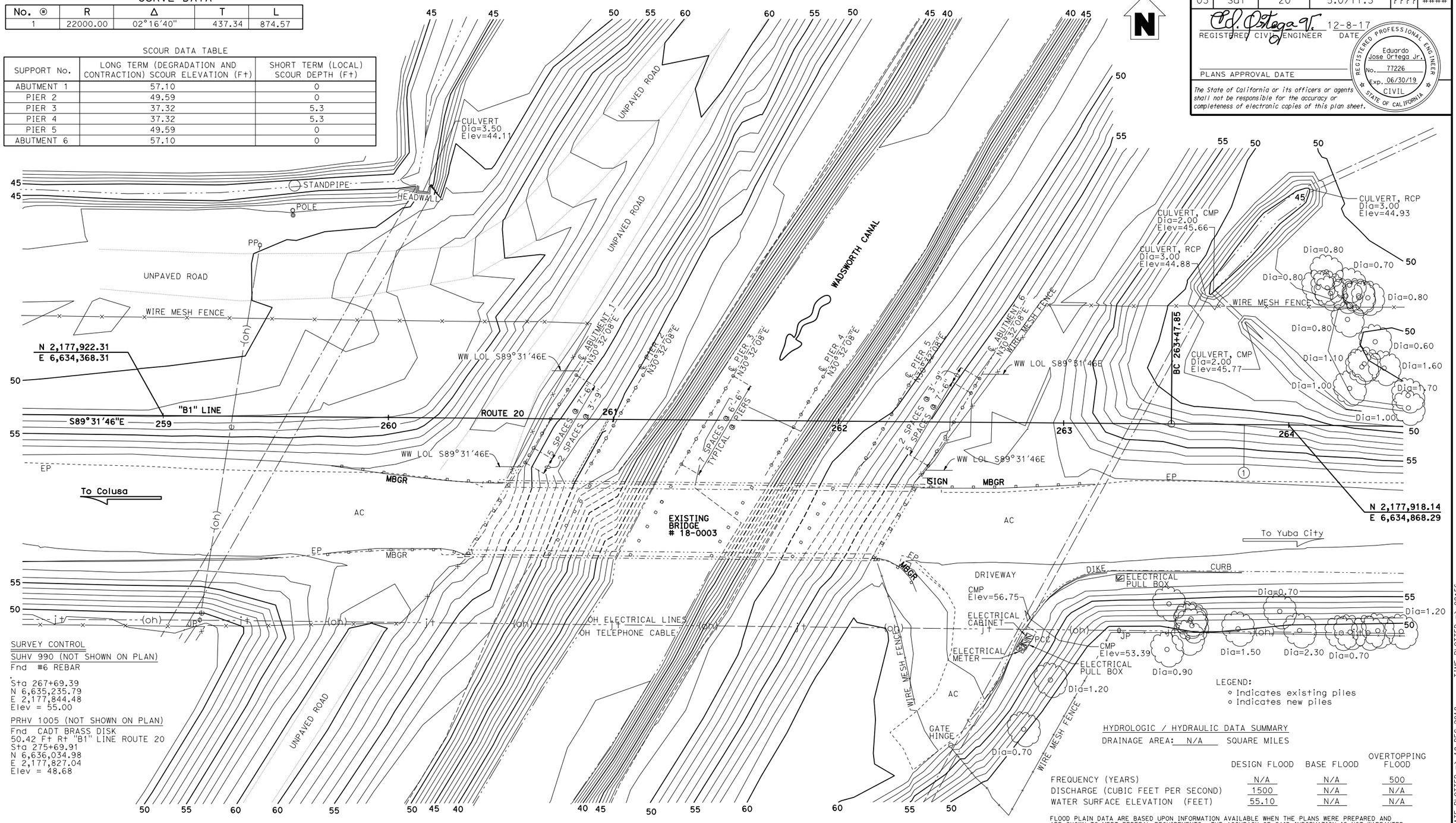

LEGEND:
- ∘ Indicates existing piles
- ∘ Indicates new piles

SURVEY CONTROL

SUHV 990 (NOT SHOWN ON PLAN)
Fnd #6 REBAR
Sta 267+69.39
N 6,635,235.79
E 2,177,844.48
Elev = 55.00

PRHV 1005 (NOT SHOWN ON PLAN)
Fnd CADT BRASS DISK
50.42 Ft Rt "B1" LINE ROUTE 20
Sta 275+69.91
N 6,636,034.98
E 2,177,827.04
Elev = 48.68

HYDROLOGIC / HYDRAULIC DATA SUMMARY

DRAINAGE AREA: N/A SQUARE MILES

	DESIGN FLOOD	BASE FLOOD	OVERTOPPING FLOOD
FREQUENCY (YEARS)	N/A	N/A	500
DISCHARGE (CUBIC FEET PER SECOND)	1500	N/A	N/A
WATER SURFACE ELEVATION (FEET)	55.10	N/A	N/A

FLOOD PLAIN DATA ARE BASED UPON INFORMATION AVAILABLE WHEN THE PLANS WERE PREPARED AND ARE SHOWN TO MEET FEDERAL REQUIREMENTS. THE ACCURACY OF SAID INFORMATION IS NOT WARRANTED BY THE STATE AND INTERESTED OR AFFECTED PARTIES SHOULD MAKE THEIR OWN INVESTIGATIONS.

PRELIMINARY INVESTIGATION SECTION

SCALE	VERT.DATUM NAVD88	PHOTOGRAMMETRY AS OF: X			
1"=20'	HORZ.DATUM NAD83 (2004.69)	SURVEYED	BY DISTRICT	CHECKED	BY A. LASELL 08/2016
ALIGNMENT TIES Dist TRAVERSE SHEET		DRAFTED	BY T. ZOLNIKOV 08/2016	CHECKED	BY S. SOU 08/2016

	BY	CHECKED
DESIGN	E. Ortega Jr	D. Desai
DETAILS	A. Onodera	D. Desai
QUANTITIES	E. Ortega Jr	D. Desai

STATE OF CALIFORNIA DEPARTMENT OF TRANSPORTATION

DIVISION OF ENGINEERING SERVICES STRUCTURE DESIGN DESIGN BRANCH 17

BRIDGE NO. 18-0052 POST MILE 9.76

WADSWORTH CANAL BRIDGE (REPLACE)

FOUNDATION PLAN

STRUCTURES FOUNDATION PLAN SHEET (ENGLISH) (REV. 09-01-10)

ORIGINAL SCALE IN INCHES FOR REDUCED PLANS 0 1 2 3

UNIT: 3586
PROJECT NUMBER & PHASE: 03000206084 CONTRACT NO.: 03-1A9204

SUBMITTAL DATE	REVISION DATES				SHEET	OF
09/07/16	7-14-17				4	14

FILE => 18-0052-e-fp101.dgn

USERNAME => s106056 DATE PLOTTED => 18-DEC-2018 TIME PLOTTED => 08:56

No. 19218 - Attachment C - Construction Drawings

Dist	COUNTY	ROUTE	POST MILES TOTAL PROJECT	SHEET No.	TOTAL SHEETS
03	Sut	20	5.0/11.3	????	####

REGISTERED CIVIL ENGINEER — DATE 12-8-17

PLANS APPROVAL DATE

REGISTERED PROFESSIONAL ENGINEER — Eduardo Jose Ortega Jr. — No. 77226 — Exp. 06/30/19 — CIVIL — STATE OF CALIFORNIA

THE STATE OF CALIFORNIA OR ITS OFFICERS OR AGENTS SHALL NOT BE RESPONSIBLE FOR THE ACCURACY OR COMPLETENESS OF SCANNED COPIES OF THIS PLAN SHEET.

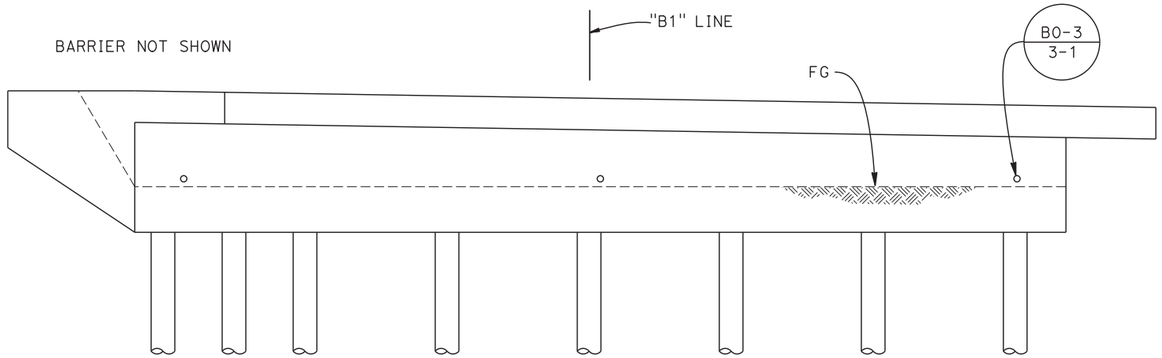

ABUTMENT ELEVATION
1/4" = 1'-0"

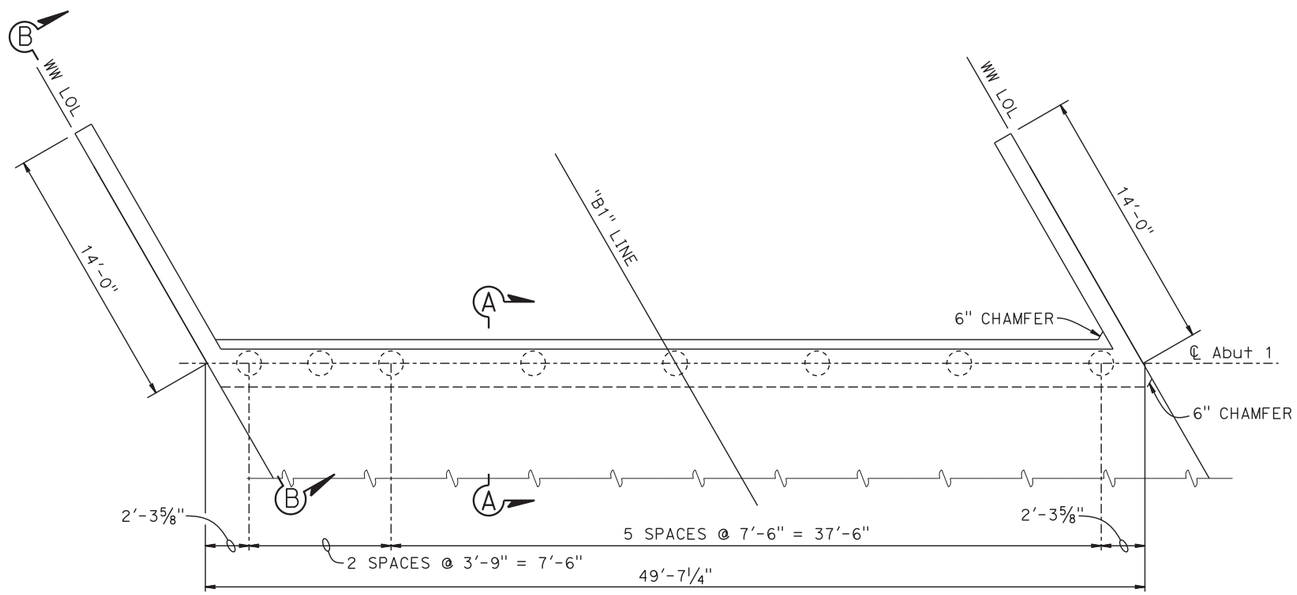

ABUTMENT PLAN
1/4" = 1'-0"

RSP B0-1

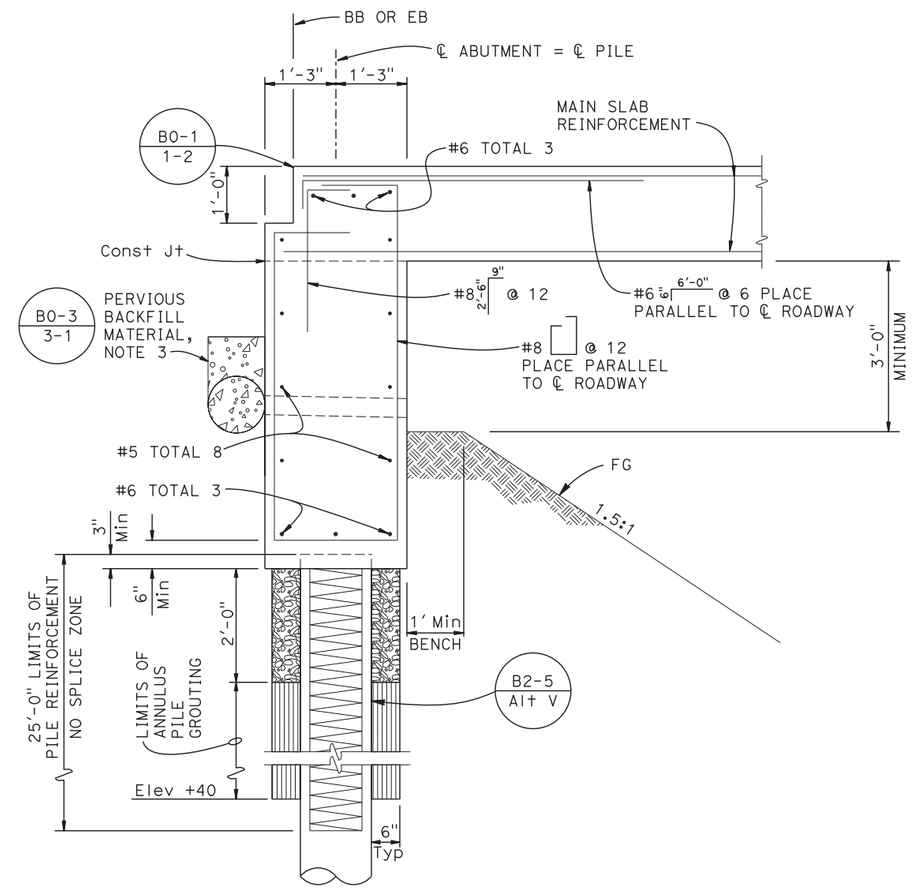

SECTION A-A
3/4" = 1'-0"

NOTES:

1. Abutment 1 shown, Abutment 6 similar
2. Geocomposite drain may be used as an alternative to pervious backfill material, see "ABUTMENT DETAILS" sheet
3. For SECTION B-B see "ABUTMENT DETAILS" sheet

LEGEND:

Indicates limits of pile annulus filled with dry sand or pea gravel

Indicate limits of pile annulus grouting

	BY	CHECKED
DESIGN	E. Ortega Jr.	D. Desai
DETAILS	A. Onodera	D. Desai
QUANTITIES	E. Ortega Jr.	D. Desai

STATE OF CALIFORNIA
DEPARTMENT OF TRANSPORTATION

DIVISION OF ENGINEERING SERVICES
STRUCTURE DESIGN
DESIGN BRANCH 17

BRIDGE No. 18-0052
POST MILE 9.76

WADSWORTH CANAL BRIDGE (REPLACE)
ABUTMENT LAYOUT

STRUCTURES DESIGN DETAIL SHEET (ENGLISH) (REVISION 3/17/2017)

DATE PLOTTED => 08-JAN-2019 TIME PLOTTED => 13:13
FILE => 18-0052-f-a01_lo1.dgn USERNAME => s127131

ORIGINAL SCALE IN INCHES FOR REDUCED PLANS 0 1 2 3

UNIT: 3586
PROJECT NUMBER & PHASE: 03000206084
CONTRACT No.: 03-1A9204

DISREGARD PRINTS BEARING EARLIER REVISION DATES

REVISION DATES: 7-8-17 7-14-17 8-16-17 1-7-19

SHEET 5 OF 14

Dist	COUNTY	ROUTE	POST MILES TOTAL PROJECT	SHEET No.	TOTAL SHEETS
03	Sut	20	5.0/11.3	????	####

REGISTERED CIVIL ENGINEER — DATE 12-8-17

PLANS APPROVAL DATE

REGISTERED PROFESSIONAL ENGINEER — Eduardo Jose Ortega Jr. — No. 77226 — Exp. 06/30/19 — CIVIL — STATE OF CALIFORNIA

THE STATE OF CALIFORNIA OR ITS OFFICERS OR AGENTS SHALL NOT BE RESPONSIBLE FOR THE ACCURACY OR COMPLETENESS OF SCANNED COPIES OF THIS PLAN SHEET.

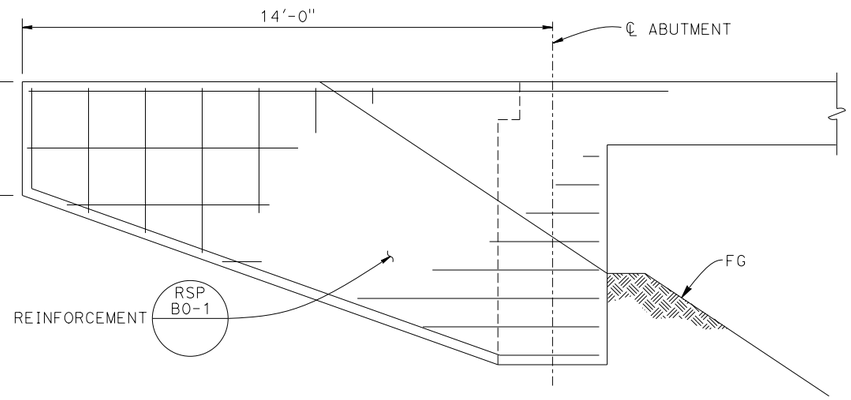

SECTION B-B
½" = 1'-0"

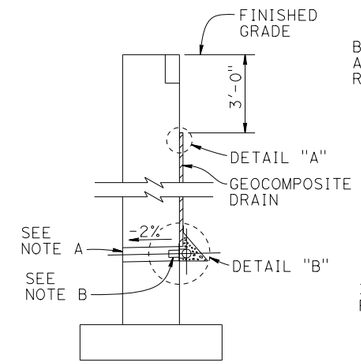

WALL SECTION

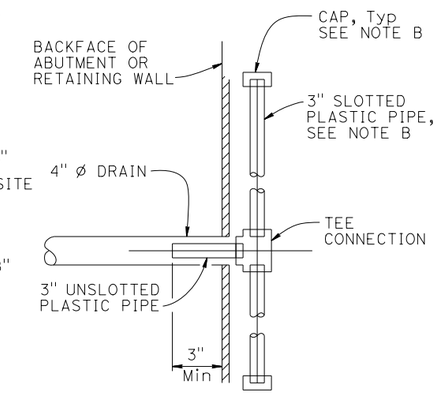

SECTION A-A

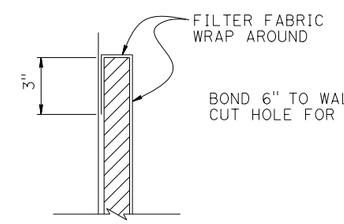

DETAIL "A"

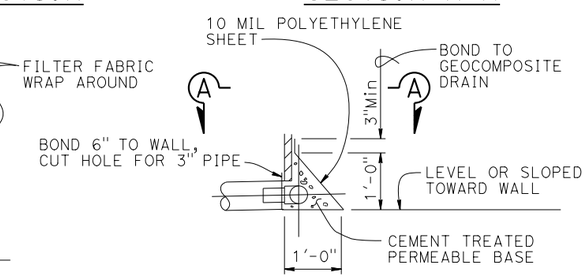

DETAIL "B"

NOTES:

1. 4" Ø drains at intermediate sag points and at 25' max center to center (9' c-c for Type 3 and 9'-3" c-c for Type 4 retaining walls). For walls adjacent to sidewalks or curbs, provide 4" Ø plastic pipe under the sidewalk to discharge through curb face. Exposed wall drains shall be located 3"± above finished grade.
2. Geocomposite drain, cement treated permeable base, and 3" slotted plastic pipe continuous behind retaining wall or abutment. Cap ends of pipe. Provide "Tee" connection at each 4" Ø drain.
3. Connect the low end of plastic pipe to the main outlet pipe as applicable.

ALTERNATIVE TO BRIDGE DETAIL B0-3 / 3-1

WEEP HOLE AND GEOCOMPOSITE DRAIN DETAIL
NO SCALE

	BY	CHECKED
DESIGN	E. Ortega Jr.	D. Desai
DETAILS	A. Onodera	D. Desai
QUANTITIES	E. Ortega Jr.	D. Desai

STATE OF CALIFORNIA
DEPARTMENT OF TRANSPORTATION

DIVISION OF ENGINEERING SERVICES
STRUCTURE DESIGN
DESIGN BRANCH 17

BRIDGE No. 18-0052
POST MILE 9.76

WADSWORTH CANAL BRIDGE (REPLACE)
ABUTMENT DETAILS

STRUCTURES DESIGN DETAIL SHEET (ENGLISH) (REVISION 3/17/2017)

DATE PLOTTED => 18-DEC-2018 TIME PLOTTED => 08:56
FILE => 18-0052-f-a01dt01.dgn USERNAME => s106056

ORIGINAL SCALE IN INCHES FOR REDUCED PLANS 0 1 2 3

UNIT: 3586
PROJECT NUMBER & PHASE: 03000206084
CONTRACT No.: 03-1A9204

DISREGARD PRINTS BEARING EARLIER REVISION DATES

REVISION DATES 7-17-17 7-17-17

SHEET 6 OF 14

Dist	COUNTY	ROUTE	POST MILES TOTAL PROJECT	SHEET No.	TOTAL SHEETS
03	Sut	20	5.0/11.3	????	####

REGISTERED CIVIL ENGINEER — DATE 12-8-17

PLANS APPROVAL DATE

REGISTERED PROFESSIONAL ENGINEER — Eduardo Jose Ortega Jr. — No. 77226 — Exp. 06/30/19 — CIVIL — STATE OF CALIFORNIA

THE STATE OF CALIFORNIA OR ITS OFFICERS OR AGENTS SHALL NOT BE RESPONSIBLE FOR THE ACCURACY OR COMPLETENESS OF SCANNED COPIES OF THIS PLAN SHEET.

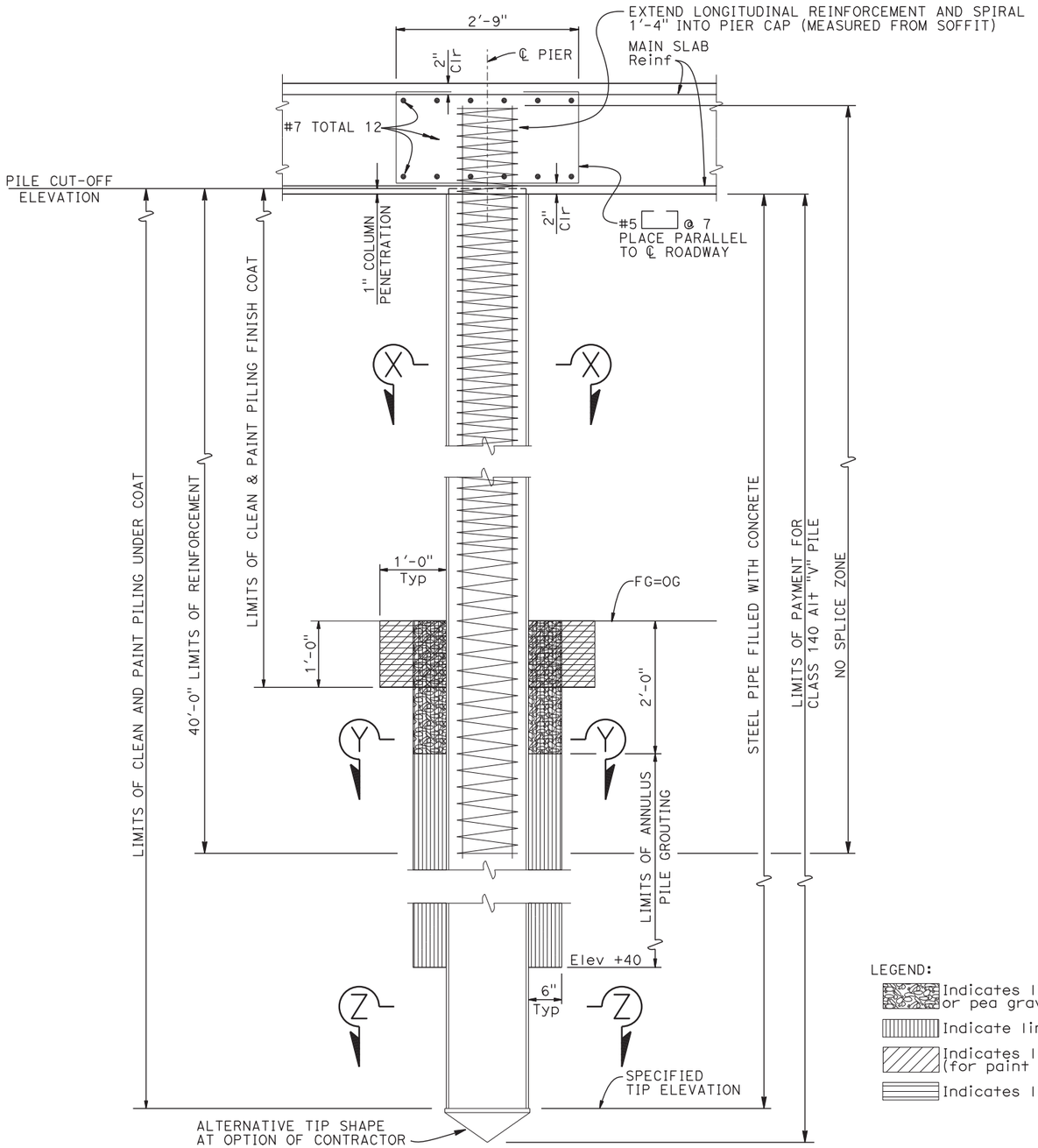

ELEVATION
1" = 1'-0"

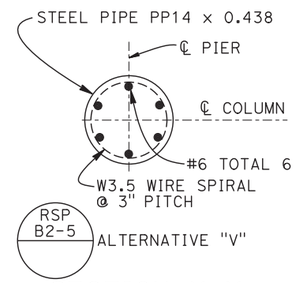

SECTION X-X

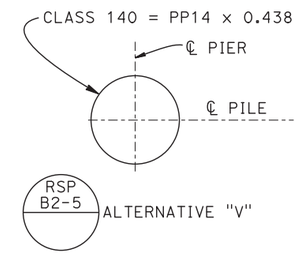

SECTION Z-Z

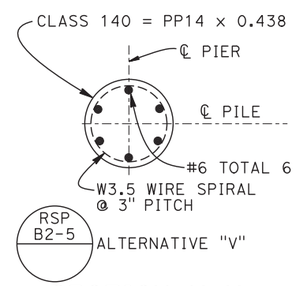

SECTION Y-Y

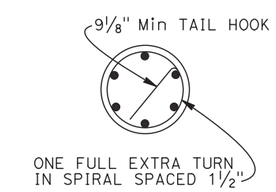

SPIRAL TERMINATION DETAIL

LEGEND:

- Indicates limits of pile annulus filled with dry sand or pea gravel
- Indicate limits of pile annulus grouting
- Indicates limits of structure excavation (for paint pile finish coat)
- Indicates limits of structure backfill

NOTES:

1. For column locations, see "FOUNDATION PLAN" sheet

	BY	CHECKED
DESIGN	E. Ortega Jr.	D. Desai
DETAILS	A. Onodera	D. Desai
QUANTITIES	E. Ortega Jr.	D. Desai

STATE OF CALIFORNIA
DEPARTMENT OF TRANSPORTATION

DIVISION OF ENGINEERING SERVICES
STRUCTURE DESIGN
DESIGN BRANCH 17

BRIDGE No. 18-0052
POST MILE 9.76

WADSWORTH CANAL BRIDGE (REPLACE)
PIER DETAILS

STRUCTURES DESIGN DETAIL SHEET (ENGLISH) (REVISION 3/17/2017)

DATE PLOTTED => 08-JAN-2019 TIME PLOTTED => 13:13
FILE => 18-0052-h-b01dt01.dgn USERNAME => s127131

ORIGINAL SCALE IN INCHES FOR REDUCED PLANS 0 1 2 3

UNIT: 3586
PROJECT NUMBER & PHASE: 03000206084
CONTRACT No.: 03-1A9204

DISREGARD PRINTS BEARING EARLIER REVISION DATES

REVISION DATES: 2-23-18 1-7-19 8-12-17 9-22-17

SHEET 7 OF 14

Dist	COUNTY	ROUTE	POST MILES TOTAL PROJECT	SHEET No.	TOTAL SHEETS
03	Sut	20	5.0/11.3	????	####

REGISTERED CIVIL ENGINEER 12-8-17 DATE

PLANS APPROVAL DATE

REGISTERED PROFESSIONAL ENGINEER Eduardo Jose Ortega Jr. No. 77226 Exp. 06/30/19 CIVIL STATE OF CALIFORNIA

THE STATE OF CALIFORNIA OR ITS OFFICERS OR AGENTS SHALL NOT BE RESPONSIBLE FOR THE ACCURACY OR COMPLETENESS OF SCANNED COPIES OF THIS PLAN SHEET.

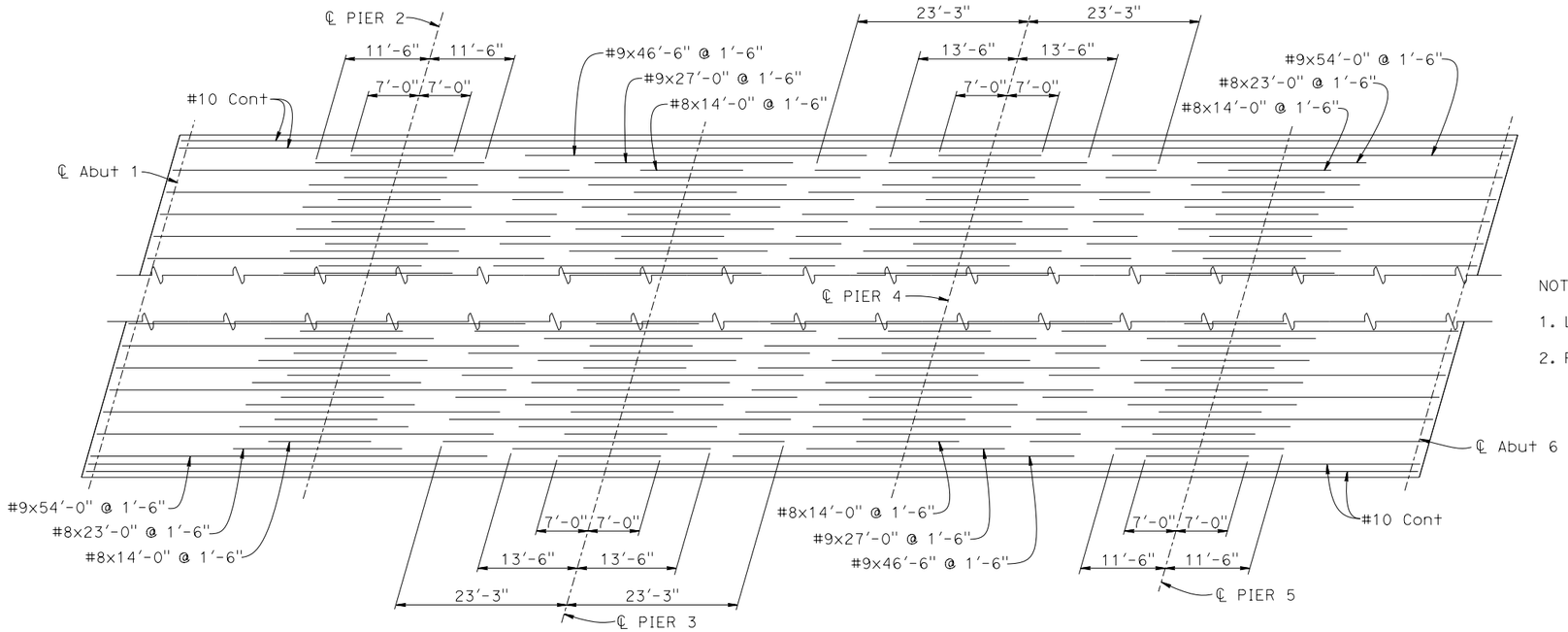

TOP OF SLAB REINFORCEMENT

NO SCALE

NOTES:

1. Lap splices are not allowed in top of slab reinforcement.
2. Place longitudinal reinforcement parallel to ℄ of Bridge.

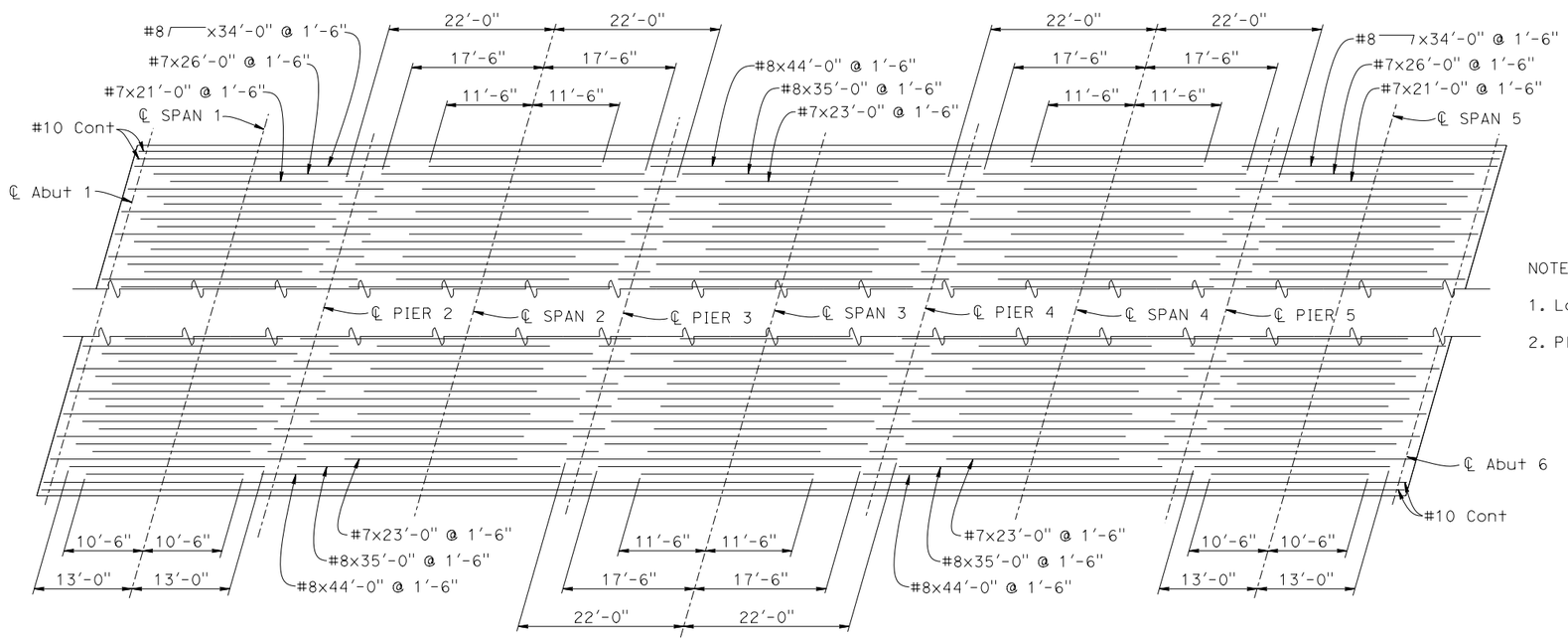

BOTTOM OF SLAB REINFORCEMENT

NO SCALE

NOTES:

1. Lap splices are not allowed in bottom of slab reinforcement.
2. Place longitudinal reinforcement parallel to ℄ of Bridge.

	BY	CHECKED
DESIGN	E. Ortega Jr.	D. Desai
DETAILS	A. Onodera	D. Desai
QUANTITIES	E. Ortega Jr.	D. Desai

STATE OF CALIFORNIA DEPARTMENT OF TRANSPORTATION

DIVISION OF ENGINEERING SERVICES STRUCTURE DESIGN DESIGN BRANCH 17

BRIDGE No. 18-0052 POST MILE 9.76

WADSWORTH CANAL BRIDGE (REPLACE)

SLAB REINFORCEMENT

STRUCTURES DESIGN DETAIL SHEET (ENGLISH) (REVISION 3/17/2017)

DATE PLOTTED => 18-DEC-2018 TIME PLOTTED => 08:56
FILE => 18-0052-1-slab-bot-top.dgn USERNAME => s106056

ORIGINAL SCALE IN INCHES FOR REDUCED PLANS 0 1 2 3

UNIT: 3586
PROJECT NUMBER & PHASE: 03000206084 CONTRACT No.: 03-1A9204

DISREGARD PRINTS BEARING EARLIER REVISION DATES

REVISION DATES 7-18-17 7-19-17 8-12-17 9-22-17

SHEET 9 OF 14

Dist	COUNTY	ROUTE	POST MILES TOTAL PROJECT	SHEET No.	TOTAL SHEETS
03	Sut	20	5.0/11.3	????	####

REGISTERED CIVIL ENGINEER — DATE 12-8-17

PLANS APPROVAL DATE

REGISTERED PROFESSIONAL ENGINEER — Eduardo Jose Ortega Jr. — No. 77226 — Exp. 06/30/19 — CIVIL — STATE OF CALIFORNIA

THE STATE OF CALIFORNIA OR ITS OFFICERS OR AGENTS SHALL NOT BE RESPONSIBLE FOR THE ACCURACY OR COMPLETENESS OF SCANNED COPIES OF THIS PLAN SHEET.

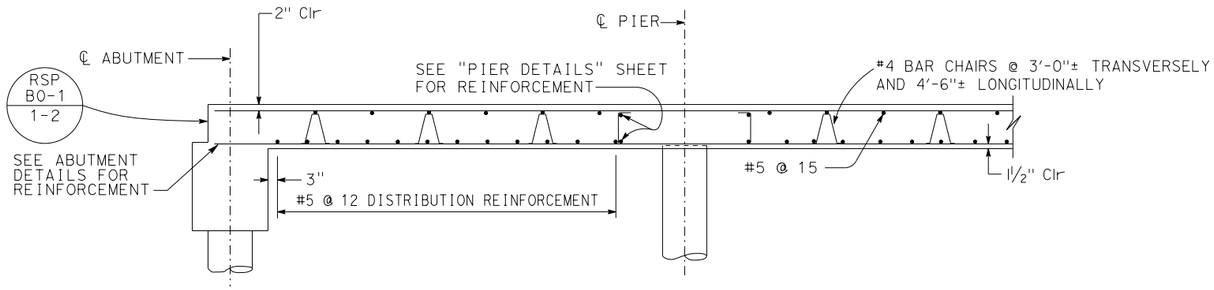

LONGITUDINAL SECTION

NO SCALE

REINFORCEMENT NOTES:

1. Splices in top main bars to be located near center of span.
2. Splices in bottom main bars to be located near pier.
3. Spacing of all transverse bars is measured along ℄ roadway.
4. Place transverse slab bars perpendicular to ℄ bridge.
   See details at left and below.

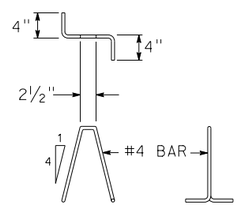

BAR CHAIR DETAIL

1" = 1'-0"

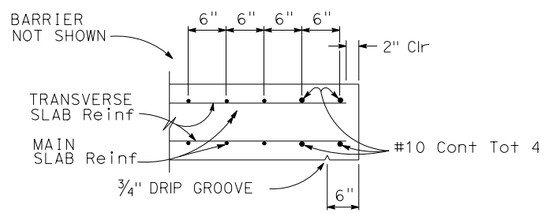

EDGE OF SLAB DETAILS

1" = 1'-0"

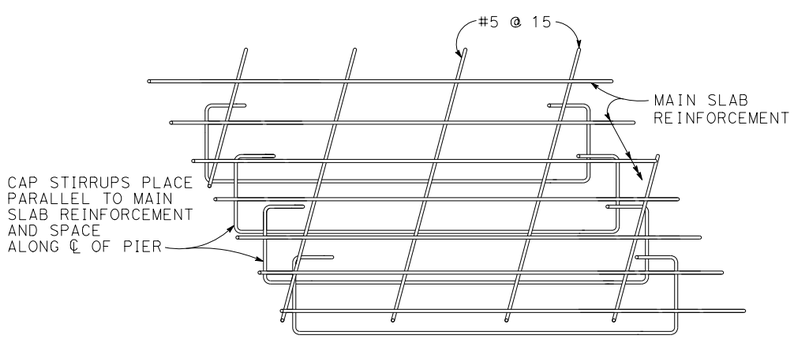

TOP SLAB REINFORCEMENT AT PIER

NO SCALE

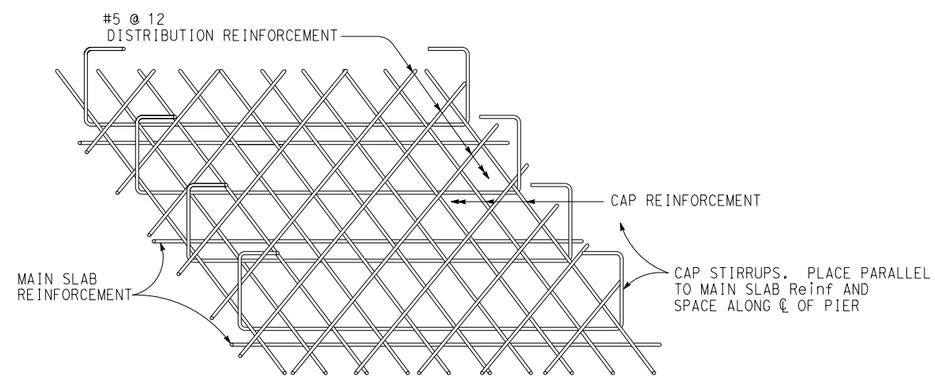

FLUSH CAP

BOTTOM SLAB REINFORCEMENT AT PIER

NO SCALE

	BY	CHECKED
DESIGN	E. Ortega Jr.	D. Desai
DETAILS	A. Onodera	D. Desai
QUANTITIES	E. Ortega Jr.	D. Desai

STATE OF CALIFORNIA
DEPARTMENT OF TRANSPORTATION

DIVISION OF ENGINEERING SERVICES
STRUCTURE DESIGN
DESIGN BRANCH 17

BRIDGE No. 18-0052
POST MILE 9.76

WADSWORTH CANAL BRIDGE (REPLACE)
SLAB REINFORCEMENT DETAILS

STRUCTURES DESIGN DETAIL SHEET
(ENGLISH) (REVISION 3/17/2017)

DATE PLOTTED => 18-DEC-2018 TIME PLOTTED => 08:56
FILE => 18-0052-1-slab-reinf-det.dgn USERNAME => s106056

ORIGINAL SCALE IN INCHES FOR REDUCED PLANS 0 1 2 3

UNIT: 3586
PROJECT NUMBER & PHASE: 03000206084
CONTRACT No.: 03-1A9204

DISREGARD PRINTS BEARING EARLIER REVISION DATES

REVISION DATES: 7-6-17 7-18-17 9-22-17

SHEET 10 OF 14

DIST	COUNTY	ROUTE	POST MILES TOTAL PROJECT	SHEET No.	TOTAL SHEETS
03	Sut	20	5.0/11.3	????	####

REGISTERED CIVIL ENGINEER — DATE 12-8-17

PLANS APPROVAL DATE

REGISTERED PROFESSIONAL ENGINEER — Eduardo Jose Ortega Jr. — No. 77226 — Exp. 06/30/19 — CIVIL — STATE OF CALIFORNIA

The State of California or its officers or agents shall not be responsible for the accuracy or completeness of scanned copies of this plan sheet.

The Registered Civil Engineer for the project is responsible for the selection and proper application of the component design and any modifications shown.

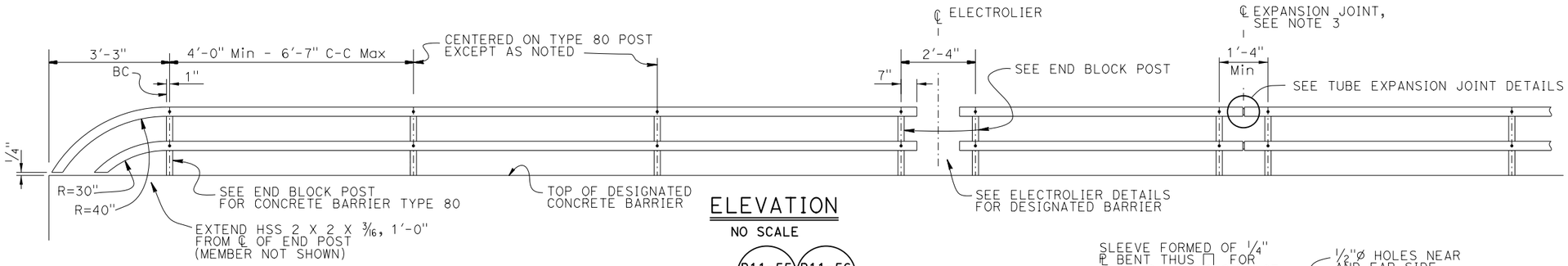

ELEVATION

NO SCALE

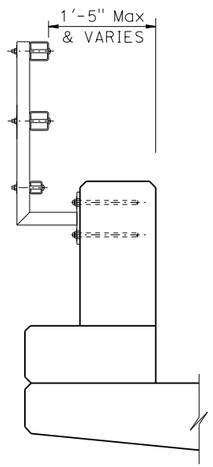

NOTE:
For details not shown, see "TYPE 732 OR 736"

TYPE 80 END BLOCK POST

1" = 1'-0"

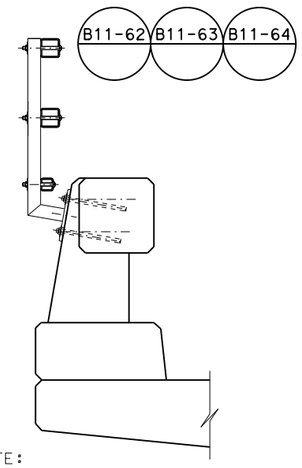

NOTE:
For details not shown, see "TYPE 732 OR 736"

TYPE 80

1" = 1'-0"

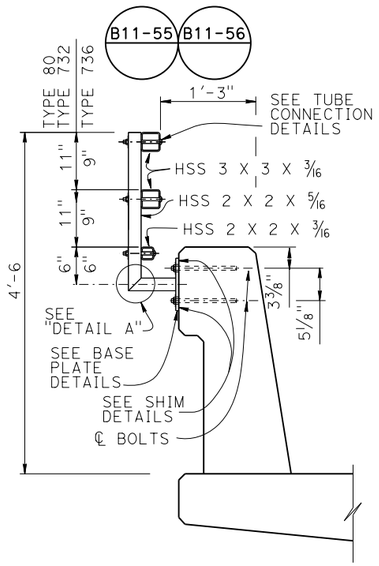

TYPE 732 OR 736

1" = 1'-0"

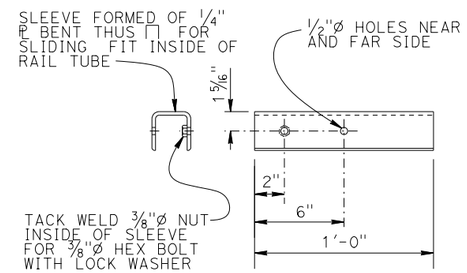

SLEEVE DETAIL

NO SCALE

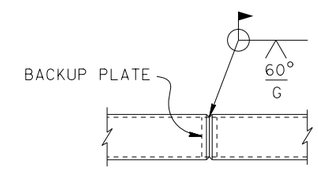

WELDED SPLICE DETAIL

NO SCALE

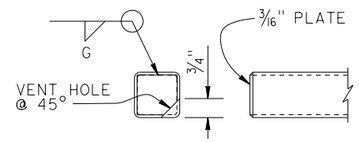

RAIL CAP DETAIL

NO SCALE

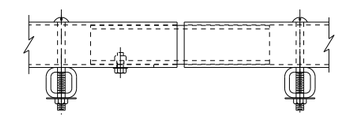

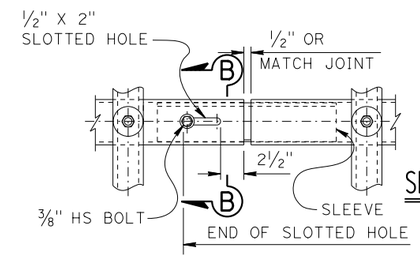

SECTION B-B

NO SCALE

TUBE EXPANSION JOINT DETAILS

NO SCALE

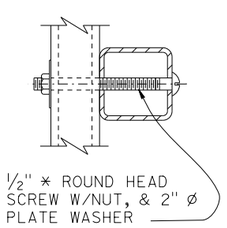

TUBE CONNECTION DETAIL

NO SCALE

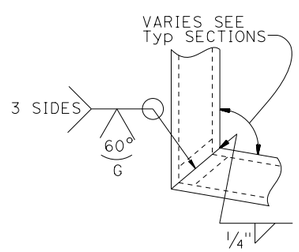

DETAIL A

NO SCALE

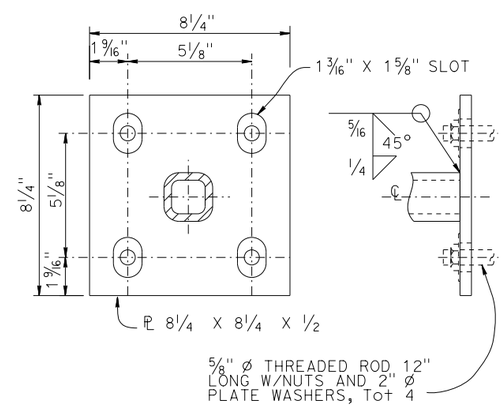

BASE PLATE DETAIL

NO SCALE

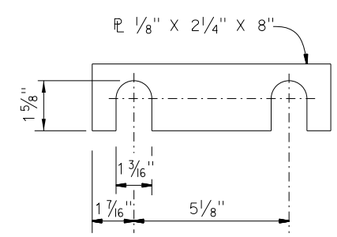

SHIM DETAILS

NO SCALE

NOTES:

1. Post must be normal to railing.
2. Rail tubes must be shop bent or fabricated to fit horizontal curve when radius is less than 950'.
3. Tube expansion joints must be located in the tubes spanning deck or wall joints. Increase joint width in tubes to match expansion joint width and increase sleeve length correspondingly.
4. Top rail tube must be continuous over not less than two posts except a short post spacing is permitted near deck or wall joints, electroliers, or other rail discontinuities as noted.
5. See Project Plans for limits of tubular bicycle railing.

BRIDGE STANDARD DETAILS

xs16-035	October 2014	The components of the Bridge Standard Details have been prepared under the responsible charge of the Technical Owner, a registered civil engineer in the State of California
FILE NO.	APPROVAL DATE	

STATE OF CALIFORNIA — DEPARTMENT OF TRANSPORTATION

DIVISION OF ENGINEERING SERVICES

BRIDGE NO. 18-0052 — POST MILE 9.76

WADSWORTH CANAL BRIDGE (REPLACE)
CONCRETE BARRIER TYPE 80, 732 & 736
TUBULAR BICYCLE RAILING DETAILS

Refer to: http://www.dot.ca.gov/hq/esc/techpubs/manual/bridgemanuals/bridge-standard-detail-sheets/index.html

FILE => 18-0052-1-xs16-035.dgn
USERNAME => s106056 — TIME PLOTTED => 08:56 — DATE PLOTTED => 18-DEC-2018

ORIGINAL SCALE IN INCHES FOR REDUCED PLANS 0 1 2 3

UNIT: 3586
PROJECT NUMBER & PHASE: 03000206084 — CONTRACT NO.: 03-1A9204

DISREGARD PRINTS BEARING EARLIER REVISION DATES

REVISION DATES: 8-2-12 — 10-1-14 — 7-14-16

SHEET 11 OF 14

Dist	COUNTY	ROUTE	POST MILES TOTAL PROJECT	SHEET No.	TOTAL SHEETS
03	Sut	20	5.0/11.3	????	####

REGISTERED CIVIL ENGINEER 12-8-17 DATE

PLANS APPROVAL DATE

REGISTERED PROFESSIONAL ENGINEER Eduardo Jose Ortega Jr. No. 77226 Exp. 06/30/19 CIVIL STATE OF CALIFORNIA

THE STATE OF CALIFORNIA OR ITS OFFICERS OR AGENTS SHALL NOT BE RESPONSIBLE FOR THE ACCURACY OR COMPLETENESS OF SCANNED COPIES OF THIS PLAN SHEET.

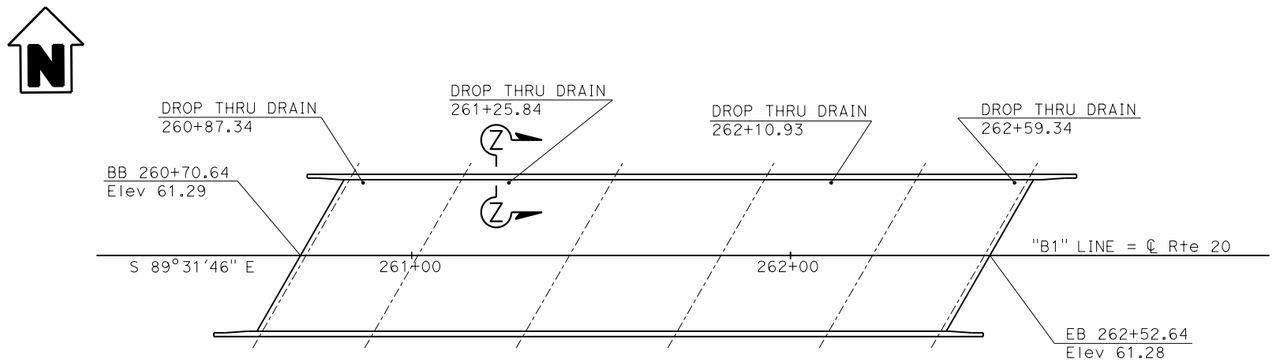

DECK DRAINAGE LAYOUT

1"=20'-0"

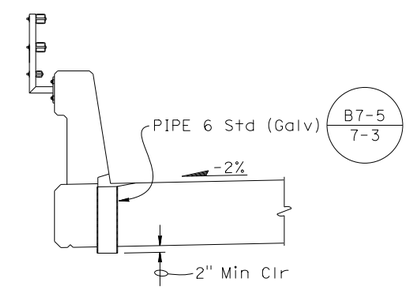

SECTION Z-Z

½" = 1'-0"

	BY	CHECKED
DESIGN	E. Ortega Jr.	D. Desai
DETAILS	A. Onodera	D. Desai
QUANTITIES	E. Ortega Jr.	D. Desai

STATE OF CALIFORNIA
DEPARTMENT OF TRANSPORTATION

DIVISION OF ENGINEERING SERVICES
STRUCTURE DESIGN
DESIGN BRANCH 17

BRIDGE No. 18-0052
POST MILE 9.76

WADSWORTH CANAL BRIDGE (REPLACE)

MISCELLANEOUS DETAILS

STRUCTURES DESIGN DETAIL SHEET
(ENGLISH) (REVISION 3/17/2017)

DATE PLOTTED => 18-DEC-2018 TIME PLOTTED => 08:56
FILE => 18-0052-u-miscdt01.dgn USERNAME => s106056

ORIGINAL SCALE IN INCHES FOR REDUCED PLANS 0 1 2 3

UNIT: 3586
PROJECT NUMBER & PHASE: 03000206084
CONTRACT No.: 03-1A9204

DISREGARD PRINTS BEARING EARLIER REVISION DATES

REVISION DATES: 9-22-17 7-12-17 7-18-17 8-12-17

SHEET 12 OF 14

BENCH MARK

SUHV 990
Fnd #6 REBAR
66.67 Ft Rt "B1" LINE ROUTE 20
Sta 267+69.39
N 6,635,235.79
E 2,177,844.48
Elev = 55.00

PRHV 1005
Fnd CADT BRASS DISK
50.42 Ft Rt "B1" LINE ROUTE 20
Sta 275+69.91
N 6,636,034.98
E 2,177,827.04
Elev = 48.68

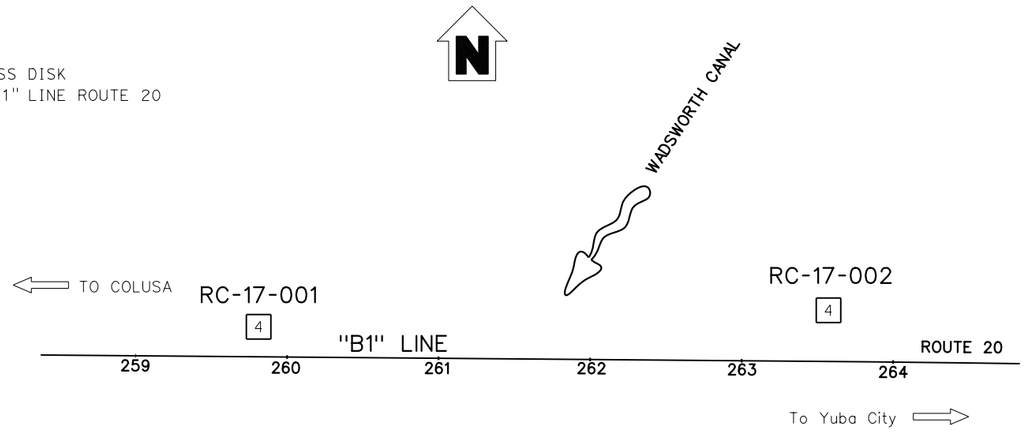

PLAN
1" = 50'

Note: Groundwater was not encountered during field investigation.

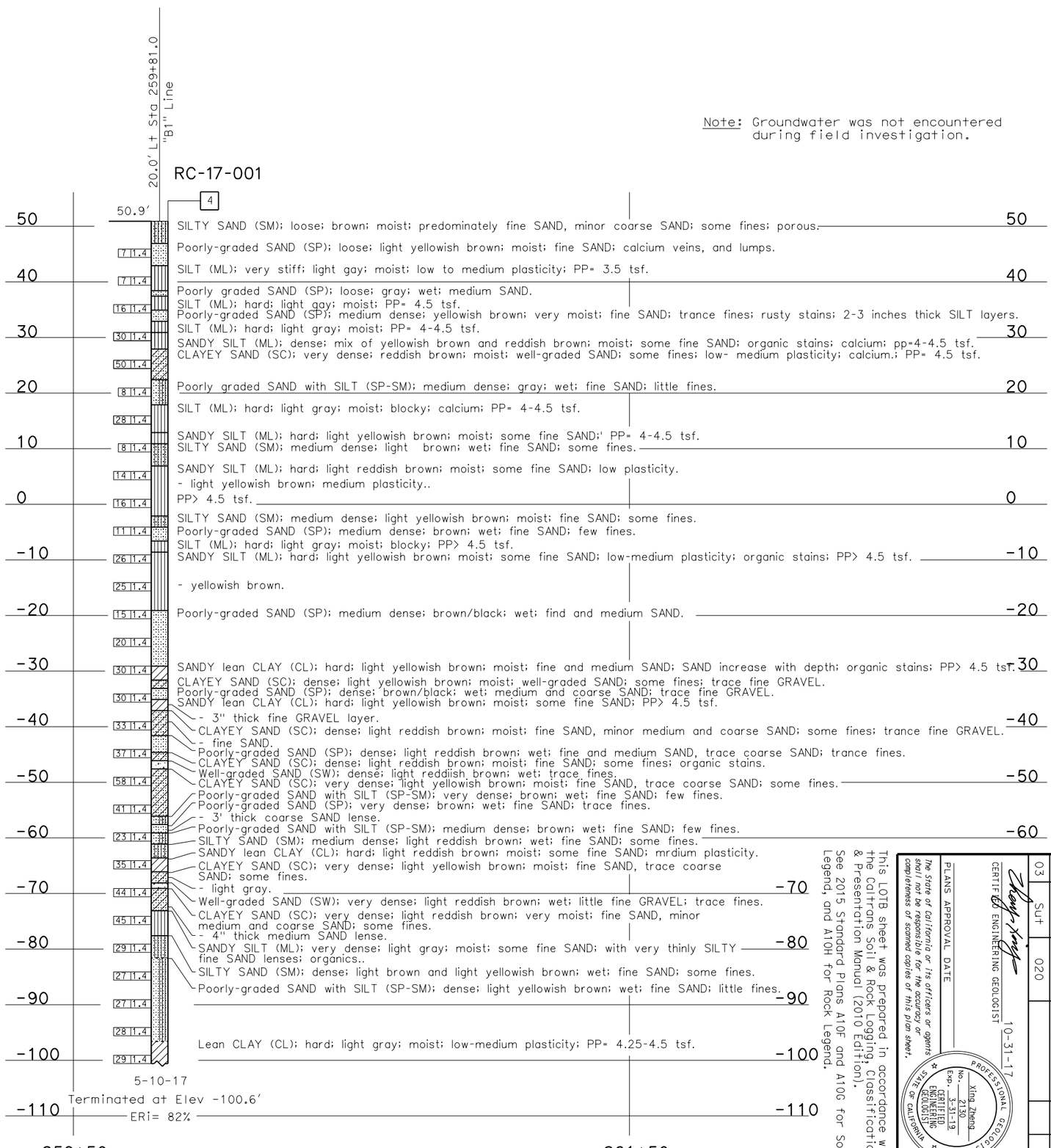

This LOTB sheet was prepared in accordance with the Caltrans Soil & Rock Logging, Classification, & Presentation Manual (2010 Edition). See 2015 Standard Plans A10F and A10G for Soil Legend, and A10H for Rock Legend.

The state of California or its officers or agents shall not be responsible for the accuracy or completeness of scanned copies of this plan sheet.

PLANS APPROVAL DATE

CERTIFIED ENGINEERING GEOLOGIST 10-31-17

PROFESSIONAL GEOLOGIST
Xing Zheng
No. 2130
Exp. 3-31-19
CERTIFIED ENGINEERING GEOLOGIST
STATE OF CALIFORNIA

DIST	COUNTY	ROUTE	POST MILES TOTAL PROJECT	SHEET NO	TOTAL SHEETS
03	Sut	020			

FUNCTIONAL SUPERVISOR
NAME: R. Mahallati

DRAWN BY: F. Nguyen
CHECKED BY: XX

FIELD INVESTIGATION BY:
X. Zheng

ENGINEERING SERVICES
MATERIALS AND GEOTECHNICAL SERVICES

STATE OF CALIFORNIA
DEPARTMENT OF TRANSPORTATION

DIVISION OF ENGINEERING SERVICES
STRUCTURE DESIGN
DESIGN BRANCH 17

BRIDGE NO. 18-0052
POST MILE 9.76

WADSWORTH CANAL
LOG OF TEST BORINGS 1 OF 2

DGS CIVIL LOG OF TEST BORINGS SHEET

ORIGINAL SCALE IN INCHES FOR REDUCED PLANS 0 1 2 3

UNIT: 3650
PROJECT NUMBER & PHASE: 0300020608I
CONTRACT NO.: 03-1A9204

DISREGARD PRINTS BEARING EARLIER REVISION DATES

REVISION DATES 10-04-17 10-05-17

SHEET 13 OF 14

FILE => 18-0052-z-lotb01.dgn

USERNAME => s106056 DATE PLOTTED => 18-DEC-2018 TIME PLOTTED => 08:56

No. 19218 - Attachment C - Construction Drawings

No. 19218 - Attachment C - Construction Drawings

DIST	COUNTY	ROUTE	POST MILES TOTAL PROJECT	SHEET No	TOTAL SHEETS
03	Sut	020			

CERTIFIED ENGINEERING GEOLOGIST 10-31-17

PROFESSIONAL GEOLOGIST Xing Zheng No. 2130 Exp. 3-31-19 CERTIFIED ENGINEERING GEOLOGIST STATE OF CALIFORNIA

PLANS APPROVAL DATE

The State of California or its officers or agents shall not be responsible for the accuracy or completeness of scanned copies of this plan sheet.

This LOTB sheet was prepared in accordance with the Caltrans Soil & Rock Logging, Classification, & Presentation Manual (2010 Edition).

See 2015 Standard Plans A10F and A10G for Soil Legend, and A10H for Rock Legend.

FOR PLAN VIEW, SEE
"LOG OF TEST BORINGS 1 OF 2"

Note: Groundwater was not encountered during field investigation.

34.0' Lt Sta 263+57.0 "B1" Line

RC-17-002

4

49.1'

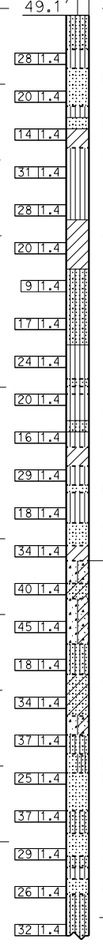

SILTY SAND (SM); loose; brown; moist; fine SAND; some fines; low plasticity; porous.

SILT (ML); dense; light gray; moist.
Poorly-graded SAND (SP); medium dense; light brown; moist; fine SAND; trace fines.

SILT (ML); hard; light gray; moist; blocky; PP= 4.5 tsf.
Poorly-graded SAND (SP); medium dense; light reddish brown; wet; fine and medium SAND.
Lean CLAY (CL); hard; light gray; moist; PP= 4.5 tsf.
SANDY SILT (ML); hard; light yellowish brown; moist; some fine SAND; low plasticity; calcium; PP= 4.5 tsf.

- PP> 4.5 tsf.
SANDY lean CLAY (CL); hard; light gray; moist; some fine SAND; rusty stains; PP> 4.5 tsf.

SILTY SAND (SM); medium dense; light reddish brown; moist; fine SAND; some fines; porous.

SANDY SILT (ML); medium dense; light yellowish brown and light gray; moist; some fine SAND; PP= 4.5 tsf.

SILTY SAND (SM); medium dense; light gray/light yellowish brown; moist; fine SAND; some fines.
SILT (ML); hard; light gray; moist; blocky; PP> 4.5 tsf.
SANDY SILT (ML); hard; light gray and light yellowish brown; moist; some fine SAND; low to medium plasticity; PP= 4.5 tsf.
SILTY SAND (SM); medium dense; light brown; moist; fine SAND; some fines.
SILT (ML); stiff to very stiff; light gray; moist; low to medium plasticity; PP= 2 - 2.5 tsf.

SANDY SILT (ML); hard; light gray; moist; some fine SAND; low to medium plasticity; PP> 4.5 tsf.
Poorly-graded SAND (SP); dense; light brown; wet; fine and medium SAND, minor coarse SAND; trace fines.
SANDY SILT (ML); hard; light yellowish brown; moist; some fine SAND; low plasticity; PP> 4.5 tsf.
Poorly-graded SAND (SP); medium dense; light yellowish brown; wet; fine SAND; trace fines.
SANDY lean CLAY (CL); hard; light yellowish brown; moist; some fine SAND; PP= 4.5 tsf.
Well-graded SAND with CLAY (SW-SC); dense; light gray/light yellowish brown; moist.
CLAYEY SAND (SC); dense; light yellowish brown; moist; fine SAND, minor medium and coarse SAND; some fines; organic stains.
Well-graded SAND with CLAY (SW-SC); very dense; light brown; moist; little fines.

SILTY SAND (SM); dense; light gray; moist; fine SAND; some fines.
- medium dense.
CLAYEY SAND (SC); dense; light brown; moist; well-graded SAND; some fines; organic stains.

Well-graded SAND with CLAY (SW-SC); dense; brown; moist; little fines; few fine GRAVEL.
SILTY SAND (SM); very dense; light yellowish brown; moist; fine SAND; some fines.
Poorly graded SAND with SILT (SP-SM); dense; light brown; moist; fine SAND; few fines.
Poorly-graded SAND (SP); dense; light brown; wet; fine SAND.

SILTY SAND (SM); dense; light yellowish brown; moist; fine SAND; some fines; organic stains.
Poorly-graded SAND (SP); dense; light gray; wet; fine and medium SAND.
SILTY SAND (SM); dense; light yellowish brown; wet; fine SAND; some fines.
SANDY SILT (ML); dense; light yellowish brown; moist; some fine SAND.
Poorly-graded SAND (SP); medium dense; light gray; wet; medium and coarse SAND.
SILTY SAND (SM); dense; light yellowish brown; moist; fine SAND; some fines.

5-17-17
Terminated at Elev -72.4'
ERi= 82%

50 40 30 20 10 0 -10 -20 -30 -40 -50 -60 -70

263+00 264+00 265+00

PROFILE
Horiz: 1" = 10'
Vert: 1" = 10'

ENGINEERING SERVICES	MATERIALS AND GEOTECHNICAL SERVICES	STATE OF CALIFORNIA DEPARTMENT OF TRANSPORTATION	DIVISION OF ENGINEERING SERVICES STRUCTURE DESIGN DESIGN BRANCH 17	BRIDGE NO. 18-0052 POST MILE 9.76	WADSWORTH CANAL LOG OF TEST BORINGS 2 OF 2
FUNCTIONAL SUPERVISOR NAME: R Mahallati	DRAWN BY: F. Nguyen CHECKED BY: XX	FIELD INVESTIGATION BY: X. Zheng			

OGS CIVIL LOG OF TEST BORINGS SHEET

ORIGINAL SCALE IN INCHES FOR REDUCED PLANS 0 1 2 3

UNIT: 3650
PROJECT NUMBER & PHASE: 03000206081 CONTRACT NO.: 03-1A9204

DISREGARD PRINTS BEARING EARLIER REVISION DATES

REVISION DATES: 10-04-17 10-05-17

SHEET 14 OF 14

FILE => 18-0052-z-lotb02.dgn

USERNAME => s106056 DATE PLOTTED => 18-DEC-2018 TIME PLOTTED => 08:56

No. 19218 - Attachment D - Hydraulic Profile Information

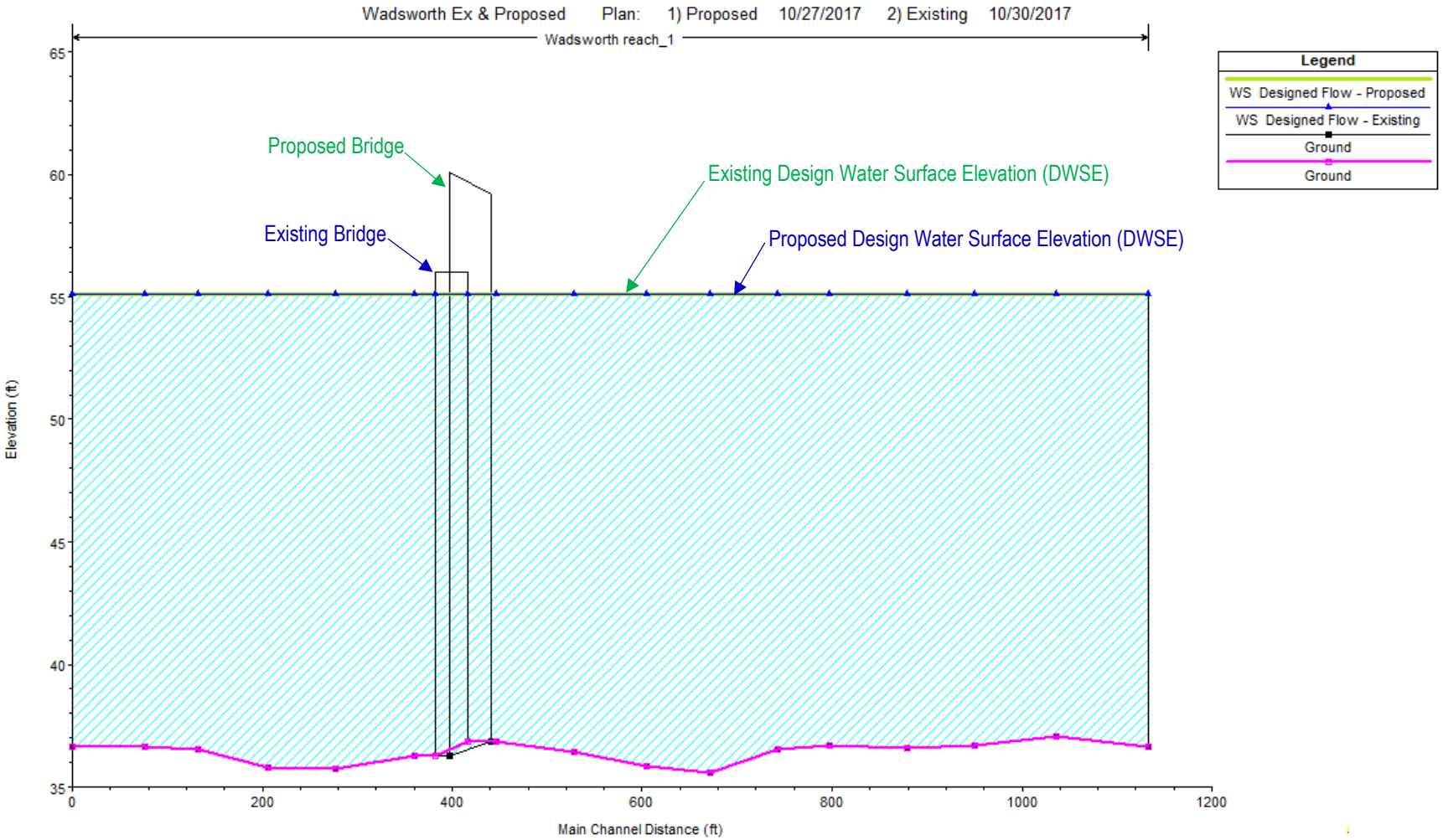

HEC-RAS River: Wadsworth Reach: reach_1 Profile: Designed Flow

Reach	River Sta	Profile	Plan	Q Total	Min Ch El	W.S. Elev	Crit W.S.	E.G. Elev	E.G. Slope	Vel Chnl	Flow Area	Top Width	Froude # Chl
				(cfs)	(ft)	(ft)	(ft)	(ft)	(ft/ft)	(ft/s)	(sq ft)	(ft)	
reach_1	1183.362	Designed Flow	Proposed	1500.00	36.66	55.12	40.12	55.14	0.000024	1.07	1399.71	139.34	0.06
reach_1	1183.362	Designed Flow	Existing	1500.00	36.66	55.12	40.12	55.14	0.000024	1.07	1399.73	139.34	0.06
reach_1	1086.175	Designed Flow	Proposed	1500.00	37.04	55.12		55.14	0.000024	1.07	1401.52	137.81	0.06
reach_1	1086.175	Designed Flow	Existing	1500.00	37.04	55.12		55.14	0.000024	1.07	1401.54	137.81	0.06
reach_1	1000.953	Designed Flow	Proposed	1500.00	36.68	55.12		55.14	0.000021	1.03	1458.76	139.57	0.06
reach_1	1000.953	Designed Flow	Existing	1500.00	36.68	55.12		55.14	0.000021	1.03	1458.78	139.58	0.06
reach_1	930.338	Designed Flow	Proposed	1500.00	36.58	55.12		55.14	0.000020	1.02	1474.93	141.14	0.06
reach_1	930.338	Designed Flow	Existing	1500.00	36.58	55.12		55.14	0.000020	1.02	1474.95	141.14	0.06
reach_1	847.412	Designed Flow	Proposed	1500.00	36.69	55.12	39.93	55.13	0.000020	1.02	1474.39	141.12	0.06
reach_1	847.412	Designed Flow	Existing	1500.00	36.69	55.12	39.93	55.13	0.000020	1.02	1474.41	141.12	0.06
reach_1	793.926	Designed Flow	Proposed	1500.00	36.54	55.12	39.87	55.13	0.000021	1.02	1473.14	141.14	0.06
reach_1	793.926	Designed Flow	Existing	1500.00	36.54	55.12	39.87	55.13	0.000021	1.02	1473.16	141.14	0.06
reach_1	722.752	Designed Flow	Proposed	1500.00	35.60	55.12	39.49	55.13	0.000019	0.99	1507.96	143.25	0.05
reach_1	722.752	Designed Flow	Existing	1500.00	35.60	55.12	39.49	55.13	0.000019	0.99	1507.98	143.25	0.05
reach_1	655.691	Designed Flow	Proposed	1500.00	35.87	55.11	39.67	55.13	0.000020	1.00	1497.00	143.99	0.05
reach_1	655.691	Designed Flow	Existing	1500.00	35.87	55.11	39.67	55.13	0.000020	1.00	1497.02	143.99	0.05
reach_1	578.491	Designed Flow	Proposed	1500.00	36.41	55.11		55.13	0.000019	1.00	1501.80	141.57	0.05
reach_1	578.491	Designed Flow	Existing	1500.00	36.41	55.11		55.13	0.000019	1.00	1501.82	141.57	0.05
reach_1	496.417	Designed Flow	Proposed	1500.00	36.84	55.11	40.22	55.13	0.000022	1.03	1462.31	148.14	0.06
reach_1	496.417	Designed Flow	Existing	1500.00	36.84	55.11	40.22	55.13	0.000022	1.03	1462.33	148.14	0.06
reach_1	466			Bridge									
reach_1	410.501	Designed Flow	Proposed	1500.00	36.26	55.11	39.85	55.12	0.000021	1.04	1442.90	137.25	0.06
reach_1	410.501	Designed Flow	Existing	1500.00	36.26	55.11	39.85	55.12	0.000021	1.04	1442.90	137.25	0.06
reach_1	328.349	Designed Flow	Proposed	1500.00	35.76	55.10	39.67	55.12	0.000024	1.08	1387.95	136.24	0.06
reach_1	328.349	Designed Flow	Existing	1500.00	35.76	55.10	39.67	55.12	0.000024	1.08	1387.95	136.24	0.06
reach_1	257.091	Designed Flow	Proposed	1500.00	35.80	55.10	39.40	55.12	0.000021	1.03	1452.80	139.00	0.06
reach_1	257.091	Designed Flow	Existing	1500.00	35.80	55.10	39.40	55.12	0.000021	1.03	1452.80	139.00	0.06
reach_1	183.014	Designed Flow	Proposed	1500.00	36.56	55.10	39.60	55.12	0.000020	1.01	1492.40	140.85	0.05
reach_1	183.014	Designed Flow	Existing	1500.00	36.56	55.10	39.60	55.12	0.000020	1.01	1492.40	140.85	0.05
reach_1	126.810	Designed Flow	Proposed	1500.00	36.66	55.10	39.74	55.12	0.000017	0.97	1553.16	143.73	0.05
reach_1	126.810	Designed Flow	Existing	1500.00	36.66	55.10	39.74	55.12	0.000017	0.97	1553.16	143.73	0.05
reach_1	50.682	Designed Flow	Proposed	1500.00	36.63	55.10	39.76	55.11	0.000017	0.95	1578.57	145.97	0.05
reach_1	50.682	Designed Flow	Existing	1500.00	36.63	55.10	39.76	55.11	0.000017	0.95	1578.57	145.97	0.05

HEC-RAS River: Wadsworth Reach: reach_1 Profile: Designed Flow

Reach	River Sta	Profile	Plan	Q Total	Min Ch El	W.S. Elev	Crit W.S.	E.G. Elev	E.G. Slope	Vel Chnl	Flow Area	Top Width	Froude # Chl
				(cfs)	(ft)	(ft)	(ft)	(ft)	(ft/ft)	(ft/s)	(sq ft)	(ft)	
reach_1	1183.362	Designed Flow	Falsework	1500.00	36.66	55.13	40.12	55.14	0.000024	1.07	1400.20	139.36	0.06
reach_1	1183.362	Designed Flow	Existing	1500.00	36.66	55.12	40.12	55.14	0.000024	1.07	1399.73	139.34	0.06
reach_1	1086.175	Designed Flow	Falsework	1500.00	37.04	55.12		55.14	0.000024	1.07	1402.00	137.83	0.06
reach_1	1086.175	Designed Flow	Existing	1500.00	37.04	55.12		55.14	0.000024	1.07	1401.54	137.81	0.06
reach_1	1000.953	Designed Flow	Falsework	1500.00	36.68	55.12		55.14	0.000021	1.03	1459.25	139.60	0.06
reach_1	1000.953	Designed Flow	Existing	1500.00	36.68	55.12		55.14	0.000021	1.03	1458.78	139.58	0.06
reach_1	930.338	Designed Flow	Falsework	1500.00	36.58	55.12		55.14	0.000020	1.02	1475.42	141.16	0.06
reach_1	930.338	Designed Flow	Existing	1500.00	36.58	55.12		55.14	0.000020	1.02	1474.95	141.14	0.06
reach_1	847.412	Designed Flow	Falsework	1500.00	36.69	55.12	39.93	55.14	0.000020	1.02	1474.89	141.14	0.06
reach_1	847.412	Designed Flow	Existing	1500.00	36.69	55.12	39.93	55.13	0.000020	1.02	1474.41	141.12	0.06
reach_1	793.926	Designed Flow	Falsework	1500.00	36.54	55.12	39.87	55.14	0.000021	1.02	1473.64	141.16	0.06
reach_1	793.926	Designed Flow	Existing	1500.00	36.54	55.12	39.87	55.13	0.000021	1.02	1473.16	141.14	0.06
reach_1	722.752	Designed Flow	Falsework	1500.00	35.60	55.12	39.48	55.13	0.000019	0.99	1508.46	143.27	0.05
reach_1	722.752	Designed Flow	Existing	1500.00	35.60	55.12	39.49	55.13	0.000019	0.99	1507.98	143.25	0.05
reach_1	655.691	Designed Flow	Falsework	1500.00	35.87	55.12	39.67	55.13	0.000020	1.00	1497.51	144.01	0.05
reach_1	655.691	Designed Flow	Existing	1500.00	35.87	55.11	39.67	55.13	0.000020	1.00	1497.02	143.99	0.05
reach_1	578.491	Designed Flow	Falsework	1500.00	36.41	55.12		55.13	0.000019	1.00	1502.29	141.59	0.05
reach_1	578.491	Designed Flow	Existing	1500.00	36.41	55.11		55.13	0.000019	1.00	1501.82	141.57	0.05
reach_1	496.417	Designed Flow	Falsework	1500.00	36.84	55.11	40.22	55.13	0.000022	1.03	1462.83	148.17	0.06
reach_1	496.417	Designed Flow	Existing	1500.00	36.84	55.11	40.22	55.13	0.000022	1.03	1462.33	148.14	0.06
reach_1	466			Bridge									
reach_1	420	Designed Flow	Falsework	1500.00	36.26	55.11	39.85	55.13	0.000021	1.04	1443.38	137.32	0.06
reach_1	415			Bridge									
reach_1	410.501	Designed Flow	Falsework	1500.00	36.26	55.11	39.85	55.12	0.000021	1.04	1442.90	137.25	0.06
reach_1	410.501	Designed Flow	Existing	1500.00	36.26	55.11	39.85	55.12	0.000021	1.04	1442.90	137.25	0.06
reach_1	328.349	Designed Flow	Falsework	1500.00	35.76	55.10	39.66	55.12	0.000024	1.08	1387.95	136.24	0.06
reach_1	328.349	Designed Flow	Existing	1500.00	35.76	55.10	39.67	55.12	0.000024	1.08	1387.95	136.24	0.06
reach_1	257.091	Designed Flow	Falsework	1500.00	35.80	55.10	39.40	55.12	0.000021	1.03	1452.80	139.00	0.06
reach_1	257.091	Designed Flow	Existing	1500.00	35.80	55.10	39.40	55.12	0.000021	1.03	1452.80	139.00	0.06
reach_1	183.014	Designed Flow	Falsework	1500.00	36.56	55.10	39.60	55.12	0.000020	1.01	1492.40	140.85	0.05
reach_1	183.014	Designed Flow	Existing	1500.00	36.56	55.10	39.60	55.12	0.000020	1.01	1492.40	140.85	0.05
reach_1	126.810	Designed Flow	Falsework	1500.00	36.66	55.10	39.74	55.12	0.000017	0.97	1553.16	143.73	0.05