Meeting of the Central Valley Flood Protection Board
July 22, 2016

Staff Report – Encroachment Permit

City of Roseville
Oak Ridge Drive Bridge, Placer County

1.0 – ITEM

Consider approval of Permit No. 19103. (Attachment B)

2.0 – APPLICANT

City of Roseville

3.0 – LOCATION

The project is located north of Cirby Way and east of Sunrise Avenue in the City of Roseville (City). The Oak Ridge Drive Bridge crosses Linda Creek, approximately 1,500 feet upstream of Sunrise Avenue. (Linda Creek, Placer County, see Attachment A)

4.0 – PROJECT DESCRIPTION

The City proposes to remove and replace the Oak Ridge Drive Bridge crossing at Linda Creek. The new bridge will have a higher profile, 26 feet longer, 10 feet wider span and consists of a concrete deck supported by two abutments on cast-in-drilled hole (CIDH) piles. The work includes excavation of 400 cubic yards of earthen material from the creek bank and the placement of 20 feet long rock slope protection on the upstream left bank of the proposed bridge.

5.0 – AUTHORITY OF THE BOARD

California Water Code § 8534, 8590 – 8610.5, and 8700 – 8710

California Code of Regulations Title 23 (Title 23)

- § 6, Need for a Permit
- § 112, Streams Regulated and Nonpermissible Work Periods

- § 121 Erosion Control
- § 128, Bridges

6.0 – PROJECT ANALYSIS

The proposed bridge will have an approximate span of 80 feet in length and 42 feet in width (Attachment C). Linda Creek is listed as a regulated stream in California Code of Regulations (CCR) Title 23, Division 1, Article 8, Section 112, Table 8.1. There are no levees along Linda Creek in the project area. The proposed project will be in compliance with all CCR Title 23 standards.

6.1 – Hydraulic Analysis

The 100-year peak flow discharge for Linda Creek was determined to be 2,500 cubic feet per second (design flow). A HEC-RAS hydraulic model, one dimensional model developed by the USACE, was created in order to analyze the potential hydraulic impacts from the proposed project.

The lowest point on the bridge will be a minimum of 2.4 feet above the water surface elevation (WSE) at the design flow. The HEC-RAS analysis showed that all computed water surface elevations and velocity changes due to the new bridge are minor, with an increase of 0.05 feet in WSE and a decrease in velocity of 1.04 feet per second due to the bridge's increased span length (Attachment D).

Based on Board staff's review of the proposed projects, it is anticipated that there will be no significant adverse hydraulic impacts to the Linda Creek channel or floodway.

6.2 – Geotechnical Analysis

There are no levees associated with this project; therefore, a geotechnical analysis is not required.

7.0 – AGENCY COMMENTS AND ENDORSEMENTS

The comments and endorsements associated with the project are as follows:

- The U.S. Army Corps of Engineers (USACE) Sacramento District decision letter was received on June 13, 2016. The letter indicates that the USACE District Engineer has no comments or recommendations regarding flood control because the proposed work does not affect a federally constructed

project. The letter is attached to the permit as Exhibit A in reference to the project.

8.0 – CEQA ANALYSIS

Board staff has prepared the following California Environmental Quality Act (CEQA) determination:

The Board, as a responsible agency under CEQA, has reviewed the Initial Study/Mitigated Negative Declaration (IS/MND) (SCH Number: 2015072040, July 2015), and the Mitigation Monitoring and Reporting Plan for the Oak Ridge Drive Bridge Replacement Project prepared by the lead agency, the City. These documents, including project design, may be viewed or downloaded from the Central Valley Flood Protection Board (Board) website at: http://www.cvfpb.ca.gov/meetings/2016/07-22-2016.cfm under the link for this agenda item. These documents are also available for review in hard copy at the Board and the City's Permit Center.

The City determined that the project would not have a significant effect on the environment and on October 21, 2015 adopted Resolution No. 15-460 (including a Mitigation Monitoring and Reporting Plan). The Notice of Determination was filed with the Placer County Clerk on October 22, 2015. Board staff finds that although the proposed project could have a potentially significant effect on the environment, there will not be a significant effect in this case because revisions in the project have been made by or agreed to by the project proponent. The project proponent has incorporated mandatory mitigation measures into the project plans to avoid identified impacts or to mitigate such impacts to a point where no significant impacts will occur. These mitigation measures address impacts to biological resources, cultural resources, hazards and hazardous materials, and hydrology and water quality. The mitigation measures are further described in the adopted IS/MND.

The documents and other materials which constitute the record of the Board's proceedings in this matter are in the custody of Leslie Gallagher, Executive Officer, Central Valley Flood Protection Board, 3310 El Camino Ave., Suite 170, Sacramento, California 95821.

9.0 – CALIFORNIA WATER CODE SECTION 8610.5 CONSIDERATIONS

1. Evidence that the Board admits into its record from any party, federal, State or local public agency, or nongovernmental organization with expertise in flood or flood plain management:

The Board has considered all the evidence presented in this matter, including the application for Permit No. 19103, and all supporting hydraulic, geotechnical, and other technical documentation provided by the City.

2. The best available science that related to the scientific issues presented by the Executive Officer, legal counsel, the Department of Water Resources or other parties that raise credible scientific issues:

   The accepted industry standards for the work proposed under this permit as regulated by CCR Title 23 have been applied to the review of this permit. On the issue of hydraulic impacts the City developed and applied a HEC-RAS hydraulic model. This model is considered one of the best available scientific tools for the purpose of evaluating WSE changes due to the proposed project.

3. Effects of the decision on the facilities of the State Plan of Flood Control (SPFC), and consistency of the proposed project with the Central Valley Flood Protection Plan as adopted by Board Resolution 2012-25 on June 29, 2012:

   This project is located approximately 14 miles upstream of any State Plan of Flood Control facilities and the proposed project is not anticipated to have any adverse hydraulic impacts to water surface elevations or channel velocities. The project is consistent with the adopted 2012 Central Valley Flood Protection Plan and current CCR Title 23 standards.

4. Effects of reasonable projected future events, including, but not limited to, changes in hydrology, climate, and development within the applicable watershed:

   The proposed project will be constructed with 2.4 feet of clearance above the design flow WSE, which is 0.4 feet higher than required by the CCR Title 23 standard for a minor stream. Therefore, there are no expected adverse effects to the proposed project from reasonable projected future events.

10.0 – STAFF RECOMMENDATION

Board staff recommends that the Board:

Adopt:

- The CEQA findings;

Approve:

- Draft Encroachment Permit No. 19103 in substantially the form provided; and

Direct:

- The Executive Officer to take the necessary actions to execute the permit and file a Notice of Determination pursuant to CEQA with the State Clearinghouse.

11.0 – LIST OF ATTACHMENTS

A. Project Vicinity and Location Maps

B. Draft Permit No. 19103

C. Project Drawings

D. Hydraulic Profile Information

Prepared by:	Sungho Lee, Engineer, Water Resources, Permitting Section
Document Review:	Ruth Darling, Senior Environmental Scientist
	Gary Lemon, PE, Senior Engineer, Permitting Section
	Mitra Emami, PE, Acting Chief Engineer
Legal Review:	Kanwarjit Dua, General Counsel

This page intentionally left blank.

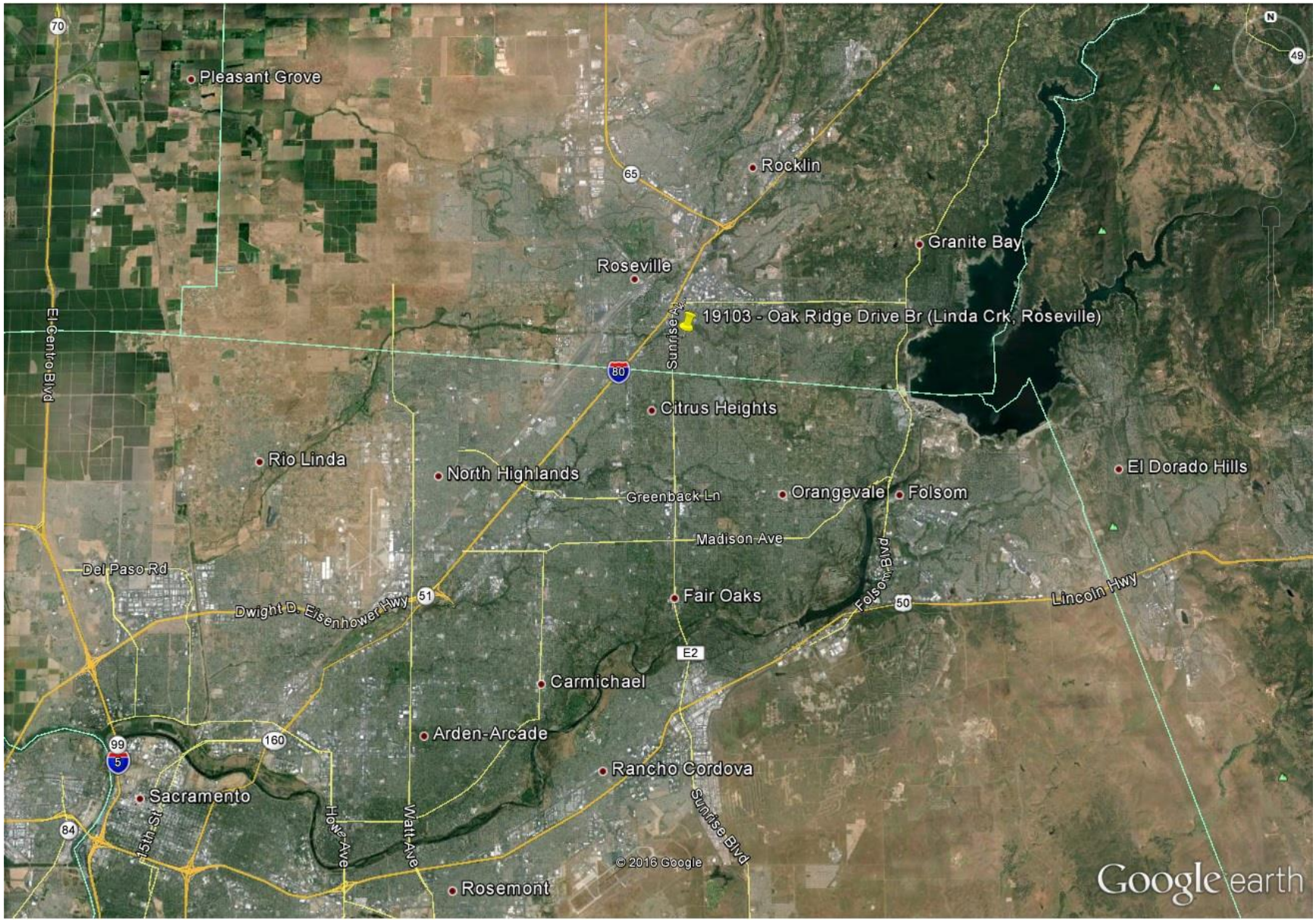
Pleasant Grove
Rocklin
Granite Bay
Roseville
19103 - Oak Ridge Drive Br (Linda Crk, Roseville)
Sunrise Ave
El Centro Blvd
Citrus Heights
Rio Linda
North Highlands
El Dorado Hills
Greenback Ln
Orangevale
Folsom
Madison Ave
Del Paso Rd
Dwight D. Eisenhower Hwy
Fair Oaks
Folsom Blvd
Lincoln Hwy
E2
Carmichael
Arden-Arcade
Rancho Cordova
Sacramento
45th St
Howe Ave
Watt Ave
Sunrise Blvd
© 2016 Google
Rosemont
Google earth

Attachment A

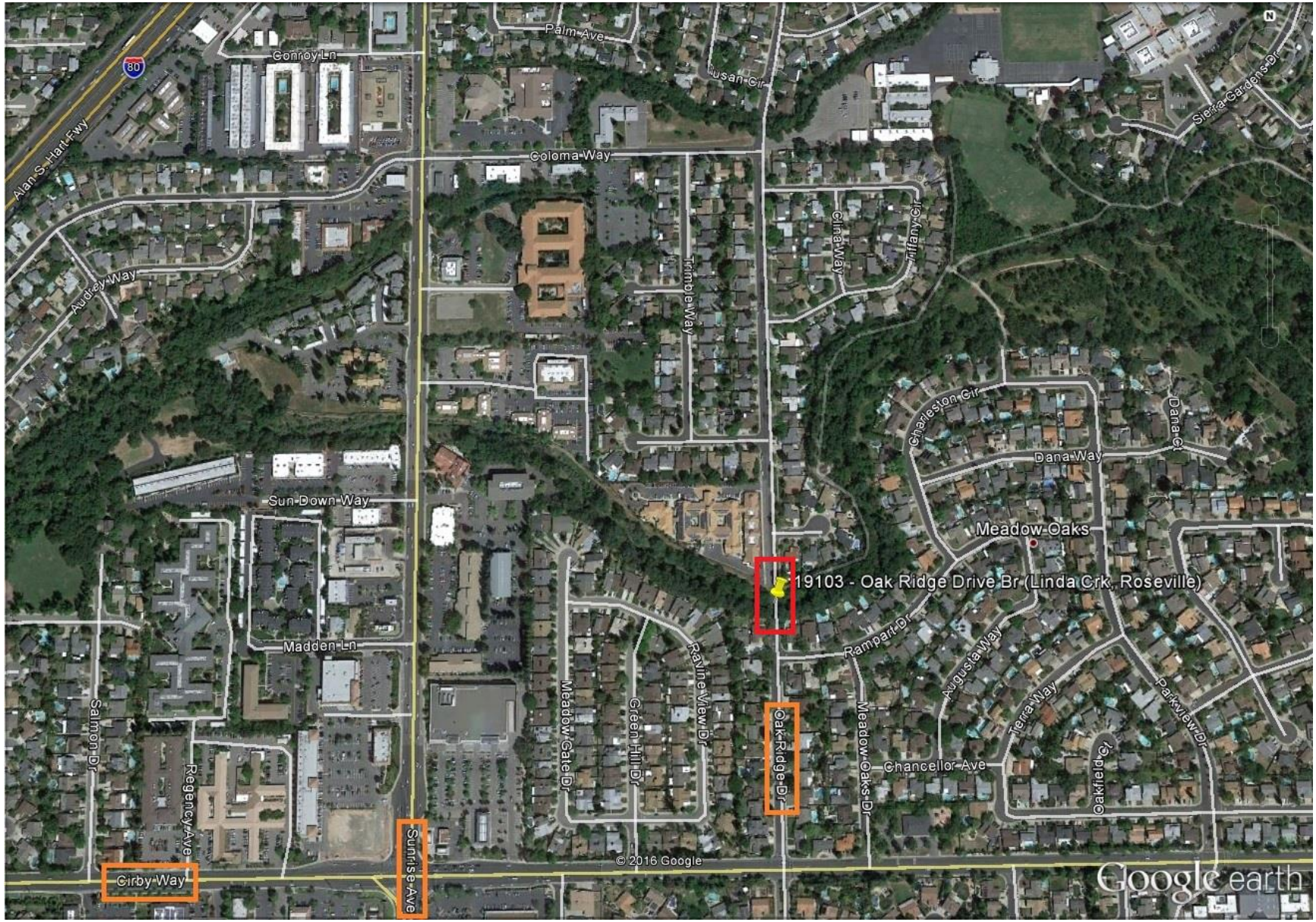

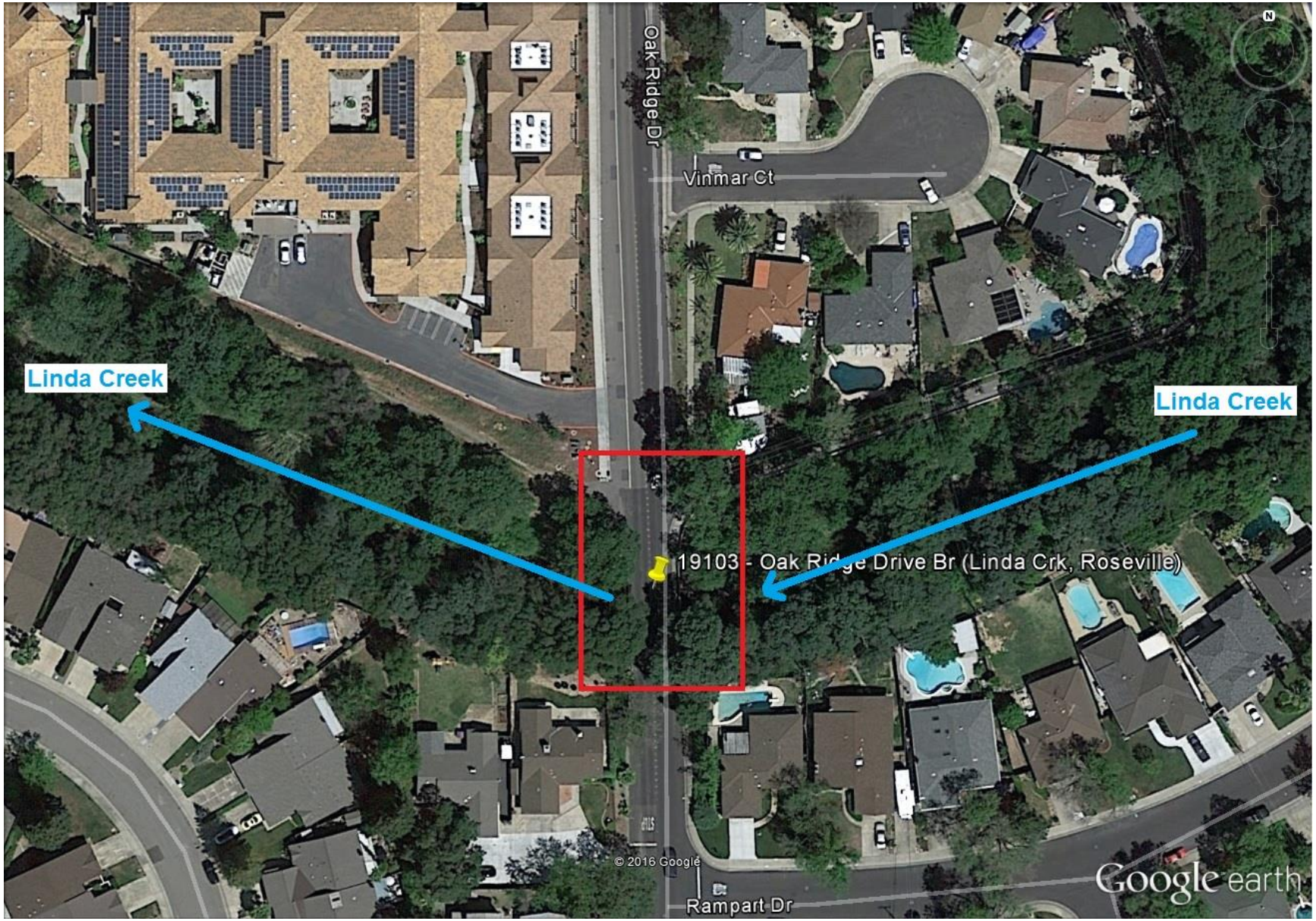
Oak Ridge Dr
Vinmar Ct
Linda Creek
Linda Creek
19103 - Oak Ridge Drive Br (Linda Crk, Roseville)
© 2016 Google
Rampart Dr
Google earth

This page intentionally left blank.

DRAFT

STATE OF CALIFORNIA
THE RESOURCES AGENCY

THE CENTRAL VALLEY FLOOD PROTECTION BOARD

PERMIT NO. 19103 BD

This Permit is issued to:

City of Roseville - Public Works Department
311 Vernon Street
Roseville, California 95678

To replace the Oak Ridge Drive bridge crossing at Linda Creek with a higher profile, 26 feet longer, 10 feet wider, concrete deck, supported by two abutments on Cast-in-drilled hole (CIDH) piles. The work includes excavation of 400 cubic yards of earthen material from the creek bank and installation of Rock Slope Protection at upstream left bank of proposed bridge.

The project is located north of Cirby Way and east of Sunrise Avenue in the City of Roseville. The Oak Ridge Drive Bridge crosses Linda Creek, approximately 1,500 feet upstream of the Sunrise Avenue.
(Section 12, T10N, R6E, MDB&M, Linda Creek, Placer County).

NOTE: Special Conditions have been incorporated herein which may place limitations on and/or require modification of your proposed project as described above.

(SEAL)

Dated: _____ _____
Executive Officer

GENERAL CONDITIONS:

ONE: This permit is issued under the provisions of Sections 8700 – 8723 of the Water Code.

TWO: Only work described in the subject application is authorized hereby.

THREE: This permit does not grant a right to use or construct works on land owned by the Sacramento and San Joaquin Drainage District or on any other land.

FOUR: The approved work shall be accomplished under the direction and supervision of the State Department of Water Resources, and the

permittee shall conform to all requirements of the Department and The Central Valley Flood Protection Board.

FIVE: Unless the work herein contemplated shall have been commenced within one year after issuance of this permit, the Board reserves the right to change any conditions in this permit as may be consistent with current flood control standards and policies of The Central Valley Flood Protection Board.

SIX: This permit shall remain in effect until revoked. In the event any conditions in this permit are not complied with, it may be revoked on 15 days' notice.

SEVEN: It is understood and agreed to by the permittee that the start of any work under this permit shall constitute an acceptance of the conditions in this permit and an agreement to perform work in accordance therewith.

EIGHT: This permit does not establish any precedent with respect to any other application received by The Central Valley Flood Protection Board.

NINE: The permittee shall, when required by law, secure the written order or consent from all other public agencies having jurisdiction.

TEN: The permittee is responsible for all personal liability and property damage which may arise out of failure on the permittee's part to perform the obligations under this permit. If any claim of liability is made against the State of California, or any departments thereof, the United States of America, a local district or other maintaining agencies and the officers, agents or employees thereof, the permittee shall defend and shall hold each of them harmless from each claim.

ELEVEN: The permittee shall exercise reasonable care to operate and maintain any work authorized herein to preclude injury to or damage to any works necessary to any plan of flood control adopted by the Board or the Legislature, or interfere with the successful execution, functioning or operation of any plan of flood control adopted by the Board or the Legislature.

TWELVE: Should any of the work not conform to the conditions of this permit, the permittee, upon order of The Central Valley Flood Protection Board, shall in the manner prescribed by the Board be responsible for the cost and expense to remove, alter, relocate, or reconstruct all or any part of the work herein approved.

SPECIAL CONDITIONS FOR PERMIT NO. 19103 BD

LIABILITY AND INDEMNIFICATION

THIRTEEN: The permittee shall defend, indemnify, and hold the Central Valley Flood Protection Board (Board) and the State of California, including its agencies, departments, boards, commissions, and their respective officers, agents, employees, successors and assigns (collectively, the "State"), safe and harmless, of and from all claims and damages related to the Board's approval of this permit, including but not limited to claims filed pursuant to the California Environmental Quality Act. The State expressly reserves the right to supplement or take over its defense, in its sole discretion.

FOURTEEN: The permittee is responsible for all liability associated with construction, operation, and maintenance of the permitted facilities and shall defend, indemnify, and hold the Board and the "State," safe and harmless, of and from all claims and damages arising from the project undertaken pursuant to this permit, all to the extent allowed by law. The State expressly reserves the right to supplement or take over its defense, in its sole discretion.

FIFTEEN: The Board and the Department of Water Resources shall not be held liable for damages to the permitted encroachment(s) resulting from releases of water from reservoirs, flood fight, operation, maintenance, inspection, or emergency repair.

AGENCY CONDITIONS

SIXTEEN: Board staff received a letter, dated June 13, 2016 from the U.S. Army Corps of Engineers (USACE) District Engineer stating that the District Engineer has no comments or recommendations regarding flood control because the proposed work does not affect a federally constructed project. This letter is attached to this permit as Exhibit A and is incorporated by reference.

SEVENTEEN: Permittee shall pay to the Board, an inspection fee(s) to cover inspection cost(s), including staff and/or consultant time and expenses, for any inspections before, during, post-construction, and regularly thereafter as deemed necessary by the Board.

EIGHTEEN: The permittee shall be responsible for repair of any damages to the channel, banks, floodway, or any other flood control facilities due to construction, operation, or maintenance of the proposed project.

PRE-CONSTRUCTION

NINETEEN: The permittee shall contact the Board by telephone at (916) 574-0609, and submit the enclosed postcard to schedule a preconstruction conference. Failure to do so at least 10 working days prior to start of work may result in delay of the project.

CONSTRUCTION

TWENTY: All work approved by this permit shall be in accordance with the submitted drawings dated May 19, 2014 and specifications except as modified by special permit conditions herein. No work, other than that approved by this permit, shall be done in the project area without prior approval of the Board.

TWENTY-ONE: No construction work of any kind shall be done during the flood season from November 1st to April 15th without prior approval of the Board.

TWENTY-TWO: All debris generated by this project shall be disposed outside of the Linda Creek floodway.

TWENTY-THREE: No material stockpiles, temporary buildings, or equipment shall remain in the floodway during the flood season from November 1 to April 15.

TWENTY-FOUR: Piers and abutments being dismantled shall be removed to at least one (1) foot below the natural ground line and at least three (3) feet below the bottom of the low-water channel.

TWENTY-FIVE: Rock slope revetment shall be uniformly placed and properly transitioned into the bank, levee slope, or adjacent original ground and in a manner which avoids segregation.

TWENTY-SIX: The recommended minimum thickness of revetment, measured perpendicular to the bank is 18 inches below the usual water surface and 12 inches above the usual water surface.

TWENTY-SEVEN: The revetment shall not contain any reinforcing steel, floatable, or objectionable material. Asphalt or other petroleum-based products may not be used as fill or erosion protection within the floodway.

TWENTY-EIGHT: Backfill material for excavations within 10 feet of bridge supports within the floodway shall be placed in 4- to 6-inch layers and compacted to a minimum of 90 percent relative compaction per ASTM Method D1557-91 and above optimum moisture content.

TWENTY-NINE: Except with respect to the activities expressly allowed under this permit, the work area shall be restored to the condition that existed prior to start of work.

THIRTY: Cleared trees and brush shall be completely burned or removed from the floodway, and downed trees or brush shall not remain in the floodway during the flood season from November 1 to April 15.

THIRTY-ONE: In the event that scour of channel bed injurious to the Linda Creek floodway occurs as a result of the project, the permittee shall repair the eroded area and propose measures, to be approved by the Board, to prevent further erosion.

OPERATIONS AND MAINTENANCE

THIRTY-TWO: The permittee shall maintain the permitted encroachment(s) within the utilized area in the manner required and as requested by the authorized representative of the Board, the Department of Water Resources, or any other agency responsible for maintenance.

THIRTY-THREE: If the bridge is damaged to the extent that it may impair the channel or floodway capacity, it shall be repaired or removed prior to the next flood season.

THIRTY-FOUR: All debris that may accumulate around the bridge piers and abutments within Linda Creek shall be completely removed from the floodway following each flood season.

PROJECT ABANDONMENT, CHANGE IN PLAN OF FLOOD CONTROL

THIRTY-FIVE: If the project works, or any portion thereof, is to be abandoned in the future, the permittee shall abandon the project under direction of the Board at the permittee's cost and expense.

THIRTY-SIX: The permittee may be required, at the permittee's cost and expense, to remove, alter, relocate, or reconstruct all or any part of the permitted project works if removal, alteration, relocation, or reconstruction is necessary as part of or in conjunction with implementation of the Central Valley Flood Protection Plan or other future flood control plan or project, or if damaged by any cause. If the permittee does not comply, the Board may perform this work at the permittee's expense.

END OF CONDITIONS

Exhibit A

DEPARTMENT OF THE ARMY
U.S. ARMY CORPS OF ENGINEERS, SACRAMENTO DISTRICT
1325 J STREET
SACRAMENTO CA 95814-2922

Flood Protection and Navigation Section (19103)

JUN 13 2016

Ms. Leslie M. Gallagher
Executive Officer
Central Valley Flood Protection Board
3310 El Camino Avenue, Room 151
Sacramento, CA 95821

Dear Ms. Gallagher:

We have reviewed permit application number 19103 submitted by the City of Roseville. This project includes replacing the Oak Ridge Drive Bridge crossing at Linda Creek with a higher profile, longer, wider, concrete deck, supported by two abutments on CIDH piles. The project also includes excavating 400 cubic yards of earthen material from the creek bank and installing rock slope protection. The project is located north of Cirby Way and east of Sunrise Avenue in Roseville, at 38.732258°N 121.267409°W NAD83, Placer County, CA.

The District Engineer has no comments or recommendations regarding flood control because the proposed work does not affect a federally constructed project.

A Section 10 and/or Section 404 permit (SPK-2015-00222) has been issued for this work.

A copy of this letter is being furnished to Mr. Don Rasmussen, Chief, Flood Project Integrity and Inspection Branch, 3310 El Camino Avenue, Suite 200, Sacramento, CA 95821.

Sincerely,

Ryan Larson, P.E.
Chief, Flood Protection and Navigation Section

This page intentionally left blank.

Attachment C

DIST	COUNTY	ROUTE	POST MILES TOTAL PROJECT	SHEET No	TOTAL SHEETS
03	SAC		X		37

REGISTERED CIVIL ENGINEER — X DATE

PLANS APPROVAL DATE

The State of California or its officers or agents shall not be responsible for the accuracy or completeness of scanned copies of this plan sheet.

REGISTERED PROFESSIONAL ENGINEER — REBECCA BAUTISTA — No. 81312 — Exp. 9/30/15 — CIVIL — STATE OF CALIFORNIA

CITY OF ROSEVILLE
311 VERNON STREET
ROSEVILLE, CA 95678

DRAKE HAGLAN AND ASSOCIATES
11060 WHITE ROCK ROAD, SUITE 200
RANCHO CORDOVA, CA 95670

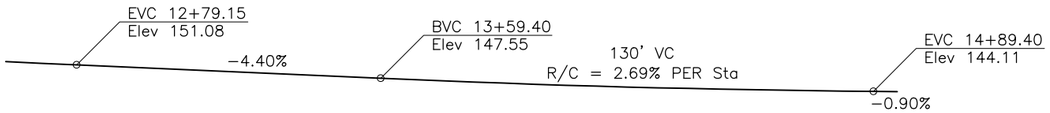

PROFILE GRADE

NO SCALE

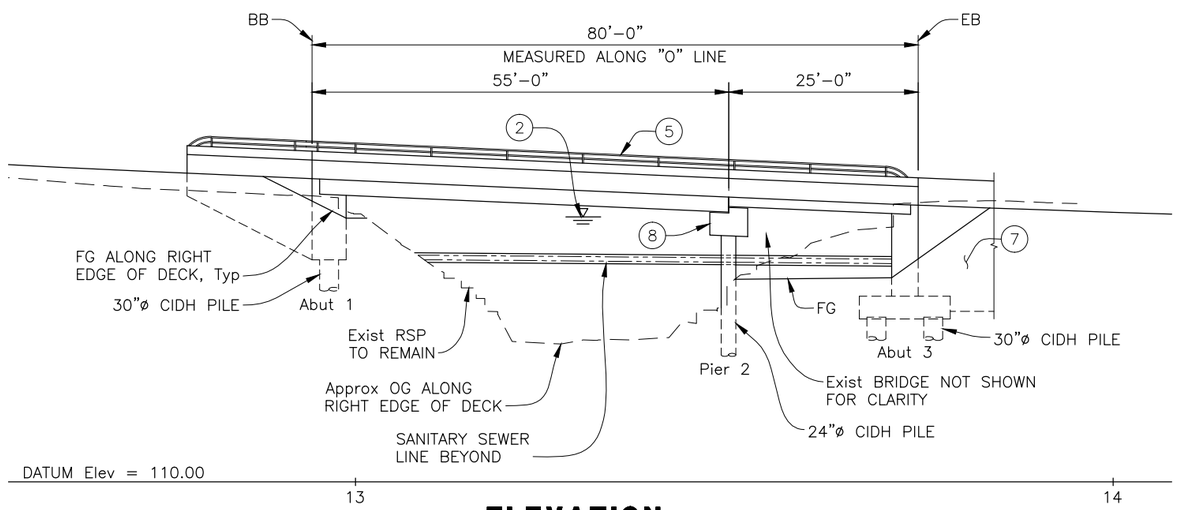

ELEVATION

1" = 10'

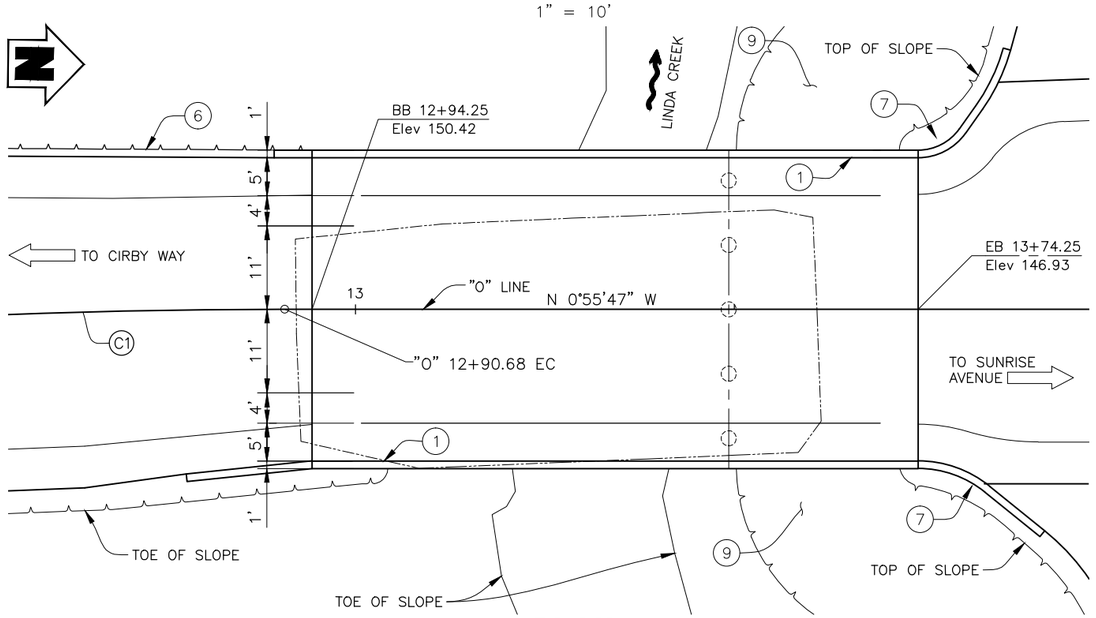

PLAN

1" = 10'

CURVE DATA

NO.	R	Δ	T	L
C1	1000.00	3°03'13"	26.65	53.30

NOTE:
THE CONTRACTOR SHALL VERIFY ALL CONTROLLING FIELD DIMENSIONS BEFORE ORDERING OR FABRICATING ANY MATERIAL.

LEGEND:

- Indicates Direction of Water Flow
- Indicates Direction of Traffic
- Indicates Existing Bridge
- Indicates New Structure

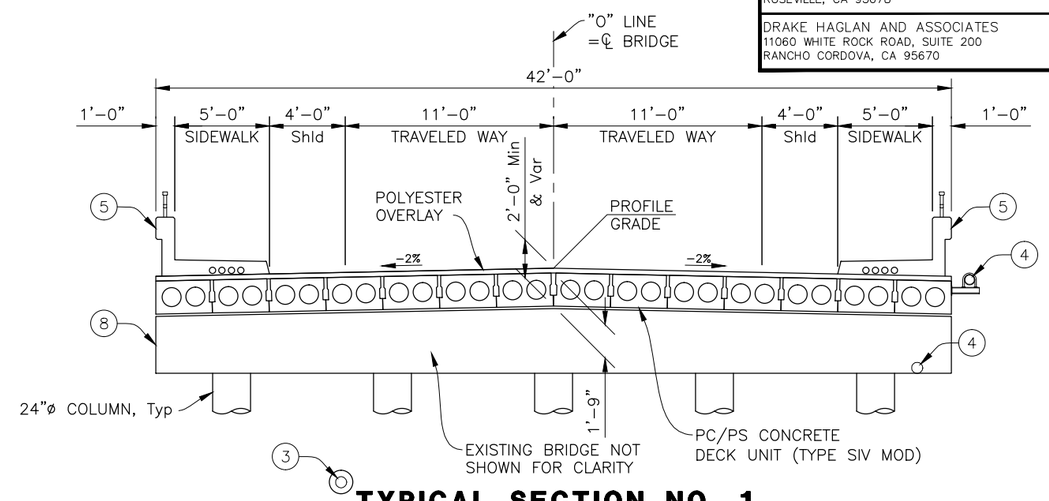

TYPICAL SECTION NO. 1

¼" = 1'−0"

NOTE:
For details not shown on "TYPICAL SECTION NO. 2", see "TYPICAL SECTION NO. 1"

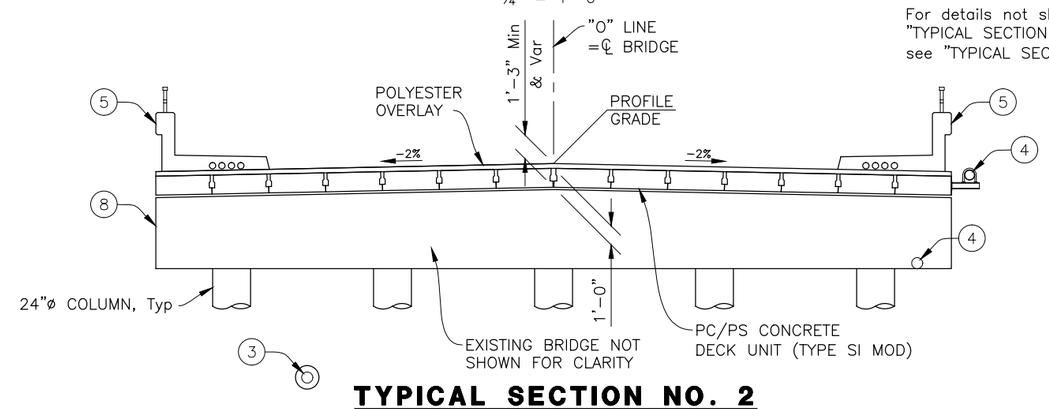

TYPICAL SECTION NO. 2

¼" = 1'−0"

NOTES:

1. Paint Bridge No. and Year completed.
2. Water Surface Elevation, see "Foundation Plan" sheet for Hydrologic Summary.
3. Existing 6" Sanitary Sewer Line to be encased and remain in place.
4. Existing 8" Water Line to be relocated.
5. Concrete Barrier Type 26 with Tubular Hand Railing.
6. Retaining Wall, see "Retaining Wall Details" sheets.
7. Flood Wall, see "Flood Wall Details" sheets.
8. Drop Cap.
9. For limits of cut & fill and grading details, see "Roadway Plans".

65% PLANS - NOT FOR CONSTRUCTION

S-1

GEOTECHNICAL PROFESSIONAL — APPROVAL DATE

X DESIGN OVERSIGHT	DESIGN	BY R. BAUTISTA	CHECKED K. ROSS	LOAD & RESISTANCE FACTOR DESIGN	LIVE LOADING: HL93 W/"LOW-BOY"; PERMIT DESIGN VEHICLE
XX-XX-XX SIGN OFF DATE	DETAILS	BY A. BARBA	CHECKED R. BAUTISTA	LAYOUT BY X	CHECKED X
	QUANTITIES	BY	CHECKED	SPECIFICATIONS BY X	PLANS AND SPECS COMPARED X

PREPARED FOR THE CITY OF ROSEVILLE DEPARTMENT OF PUBLIC WORKS

REBECCA BAUTISTA, PROJECT ENGINEER

BRIDGE NO. 19C-0180 — POST MILES X

OAK RIDGE DRIVE BRIDGE REPLACEMENT OVER LINDA CREEK

GENERAL PLAN

DESIGN GENERAL PLAN SHEET (ENGLISH) (REV.7/16/10)

ORIGINAL SCALE IN INCHES FOR REDUCED PLANS 0 1 2 3

UNIT: 03-1E2901
PROJECT NUMBER & PHASE: 0300000258

DISREGARD PRINTS BEARING EARLIER REVISION DATES

REVISION DATES (PRELIMINARY STAGE ONLY) xx/xx/xx

SHEET 25 OF 37

FILE => $REQUEST

CONTRACT NO.: XXXXX

PROJECT ID:

USERNAME => $USER DATE PLOTTED => $DATE

U:\12022 - Oak Ridge Drive Bridge - City of Roseville\400 Project Design Files\430 Bridges & Structures\Submittal 15% GAD's\Plans\ORD-S-GP.dwg 2/21/2014 9:47 AM

Attachment C

DIST	COUNTY	ROUTE	POST MILES TOTAL PROJECT	SHEET No	TOTAL SHEETS
03	SAC		X		37

REGISTERED CIVIL ENGINEER X DATE

PLANS APPROVAL DATE

The State of California or its officers or agents shall not be responsible for the accuracy or completeness of scanned copies of this plan sheet.

REGISTERED PROFESSIONAL ENGINEER REBECCA BAUTISTA No. 81312 Exp. 9/30/15 CIVIL STATE OF CALIFORNIA

CITY OF ROSEVILLE
311 VERNON STREET
ROSEVILLE, CA 95678

DRAKE HAGLAN AND ASSOCIATES
11060 WHITE ROCK ROAD, SUITE 200
RANCHO CORDOVA, CA 95670

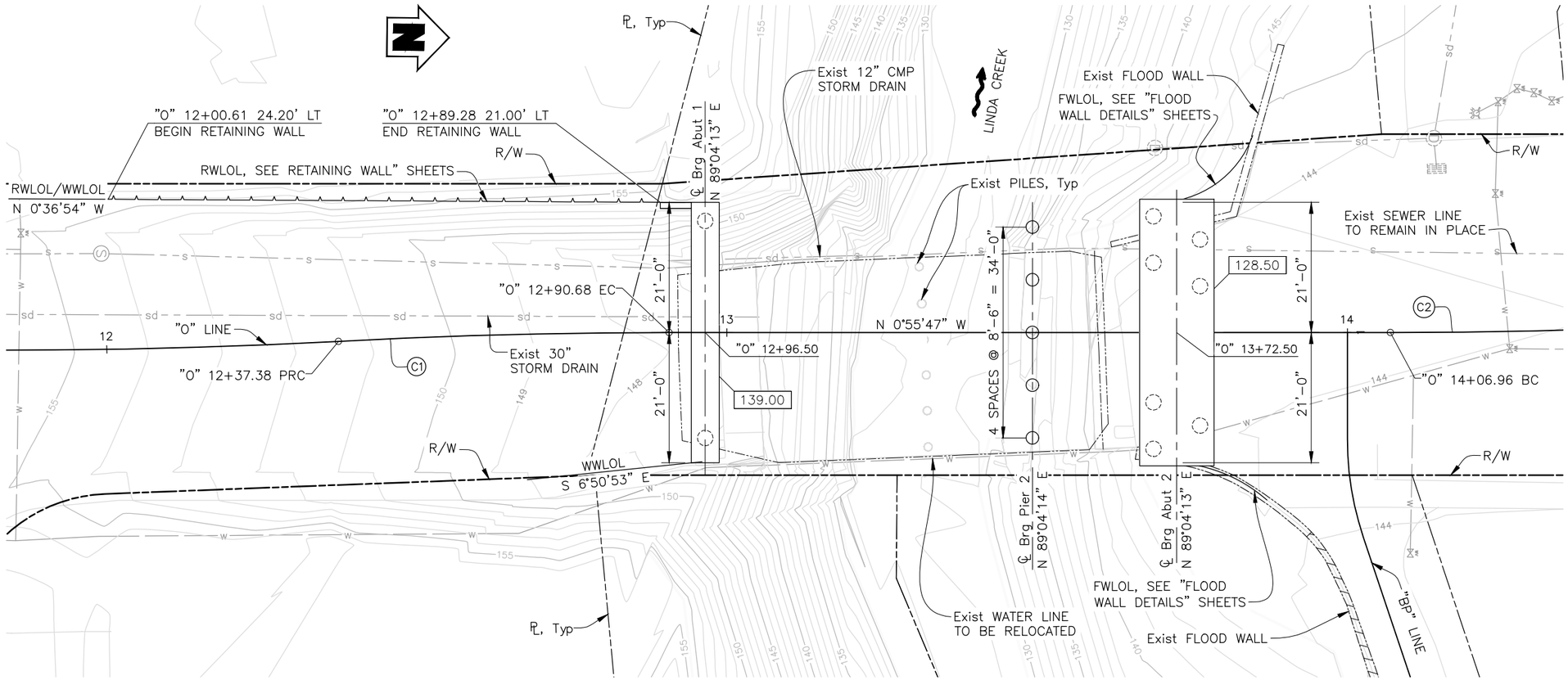

PLAN

1" = 10'

CURVE DATA

NO.	R	Δ	T	L
C1	1000.00	3°03'13"	26.65	53.30
C2	1000.00	3°22'09"	29.41	58.80

PILE DATA TABLE

Location	Pile Type	Nominal Resistance (kips)		Design Tip Elevation (Ft)	Specified Tip Elevation (Ft)
		Compression	Tension		
Abut 1	30"ø CIDH	200	0	98.25(a), 83.25(d)	83.25
Pier 2	24"ø CIDH	250	0	77.25(a), 74.00(d)	74.00
Abut 3	30"ø CIDH	180	0	98.25(a), 83.25(d)	83.25

Design Tip Elevations of Abutments are controlled by the following demands: (a) Compression, (d) Lateral Loads

HYDROLOGIC SUMMARY TABLE

Frequency (Years)	Design Flood	Base Flood	CVFPB Design Flood	Overtopping Flood	Flood of Record
	50	100	200	500	> 500
Discharge (Cubic Feet per Second)	1936	2495	3147	5100	6753
Water Surface Elevation (ft), Immediately Upstream of Bridge	142.98	144.07	144.84	147.35	147.8

Flood plain data are based on information available when the plans were prepared and are shown to meet federal requirements. The accuracy of said information is not warranted by the City and interested or affected parties should make thier own decisions.

LEGEND:

- Indicates Bottom of Footing Elevation
- Indicates Direction of Water Flow
- Indicates Direction of Traffic
- Indicates Structures to remain
- Indicates Existing Bridge and Structures to be removed
- Indicates New Structure
- Indicates 30"ø CIDH Concrete Piles, not all shown
- Indicates 24"ø CIDH Concrete Piles
- Indicates Existing Concrete Piles

BENCH MARK:

See "Roadway Plans"

NOTE:
THE CONTRACTOR SHALL VERIFY ALL CONTROLLING FIELD DIMENSIONS BEFORE ORDERING OR FABRICATING ANY MATERIAL.

65% PLANS - NOT FOR CONSTRUCTION

S-3

GEOTECHNICAL PROFESSIONAL APPROVAL DATE

U:\12022 – Oak Ridge Drive Bridge – City of Roseville\400 Project Design Files\430 Bridges & Structures\Submittal 15% GAD's\Plans\ORD-S-FP.dwg 2/25/2014 10:11 AM

DATE PLOTTED => $DATE USERNAME => $USER

X DESIGN OVERSIGHT	SCALE: No Scale	VERT.DATUM NGVD 29	HORZ.DATUM X	DESIGN	BY R. BAUTISTA	CHECKED K. ROSS	
XX-XX-XX SIGN OFF DATE	PHOTOGRAMMETRY AS OF: XX/XX/XX	ALIGNMENT TIES X		DETAILS	BY A. BARBA	CHECKED R. BAUTISTA	
	SURVEYED BY X	DRAFTED BY		QUANTITIES	BY X	CHECKED X	
	FIELD CHECKED BY X	CHECKED BY					

PREPARED FOR THE CITY OF ROSEVILLE DEPARTMENT OF PUBLIC WORKS

REBECCA BAUTISTA
PROJECT ENGINEER

BRIDGE NO. 19C-0180
POST MILES X

OAK RIDGE DRIVE BRIDGE REPLACEMENT OVER LINDA CREEK

FOUNDATION PLAN

FOUNDATION PLAN SHEET (ENGLISH) (REV.7/16/10)

ORIGINAL SCALE IN INCHES FOR REDUCED PLANS 0 1 2 3

UNIT: 03-1E2901
PROJECT NUMBER & PHASE: 0300000258

DISREGARD PRINTS BEARING EARLIER REVISION DATES

REVISION DATES (PRELIMINARY STAGE ONLY) xx/xx/xx

SHEET 27 OF 37

FILE => $REQUEST

CONTRACT NO.: XXXXX PROJECT ID:

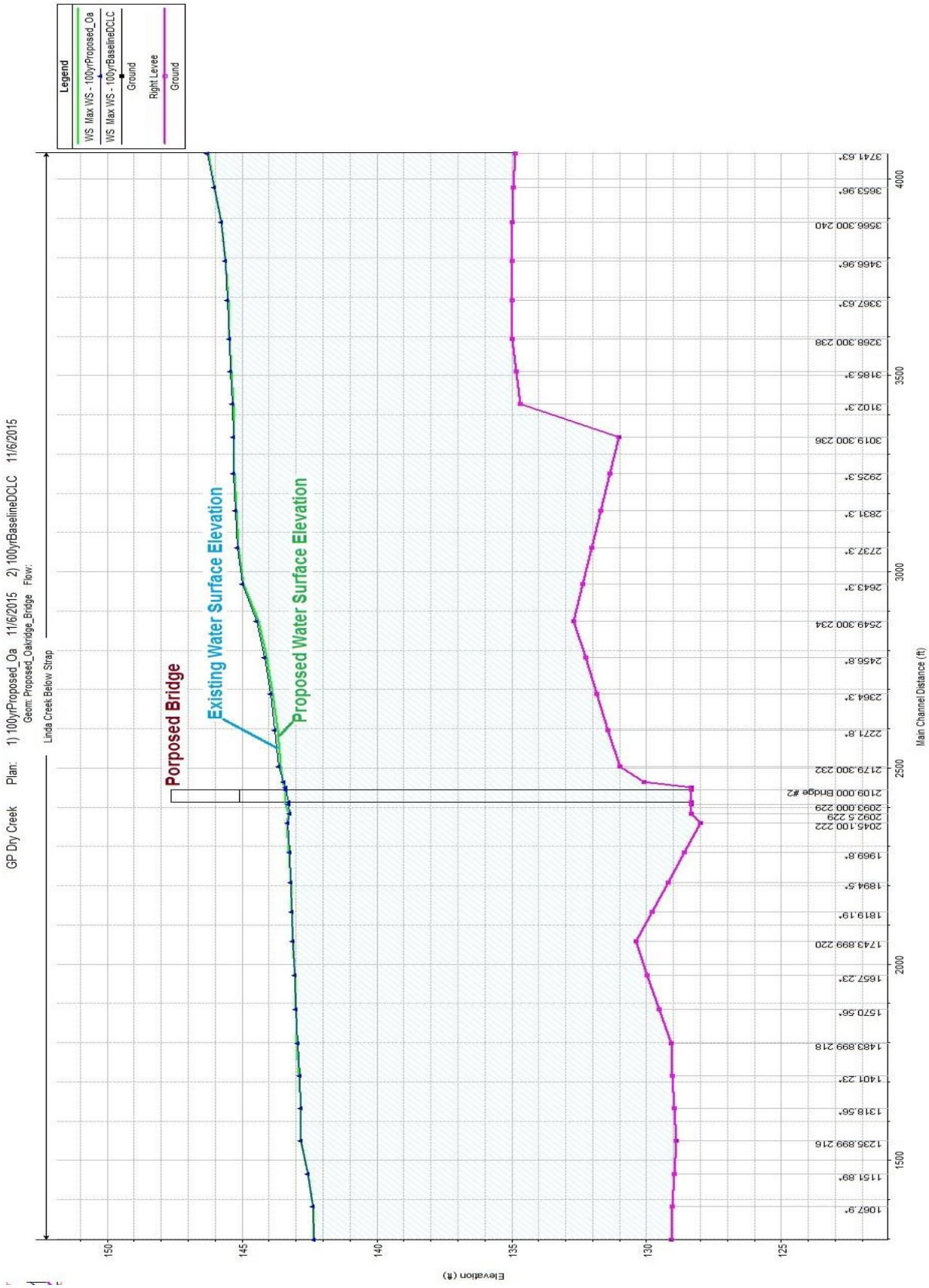
GP Dry Creek Plan: 1) 100yrProposed_Oa 11/6/2015 2) 100yrBaselineDCLC 11/6/2015
Geom: Proposed_Oakridge_Bridge Flow:
Linda Creek Below Strap
Legend
WS Max WS - 100yrProposed_Oa
WS Max WS - 100yrBaselineDCLC
Ground
Right Levee
Ground
Porposed Bridge
Existing Water Surface Elevation
Proposed Water Surface Elevation
Elevation (ft)
Main Channel Distance (ft)
150
145
140
135
130
125
1500
2000
2500
3000
3500
4000
1067.9*
1151.89*
1235.899 216
1318.56*
1401.23*
1483.899 218
1570.56*
1657.23*
1743.899 220
1819.19*
1894.5*
1969.8*
2045.100 222
2092.5 229
2093.000 229
2109.000 Bridge #2
2179.300 232
2271.8*
2364.3*
2456.8*
2549.300 234
2643.3*
2737.3*
2831.3*
2925.3*
3019.300 236
3102.3*
3185.3*
3268.300 238
3367.63*
3466.96*
3566.300 240
3653.96*
3741.63*

Profile Output Table - Standard Table 1

File Options Std. Tables User Tables Locations Help

HEC-RAS River: Linda Creek Reach: Below Strap Profile: Max WS

Reload Data

Reach	River Sta	Profile	Plan	Q Total	Min Ch El	W.S. Elev	Crit W.S.	E.G. Elev	E.G. Slope	Vel Chnl	Flow Area	Top Width	Froude # Chl
				(cfs)	(ft)	(ft)	(ft)	(ft)	(ft/ft)	(ft/s)	(sq ft)	(ft)	
Below Strap	2737.3*	Max WS	100yrProposed_Da	2494.60	132.04	145.13		145.21	0.000903	2.45	1168.23	165.02	0.14
Below Strap	2737.3*	Max WS	100yrBaselineDCLC	2477.26	132.04	145.16		145.25	0.000879	2.43	1173.70	165.05	0.14
Below Strap	2643.3*	Max WS	100yrProposed_Da	2494.65	132.37	144.94		145.10	0.001716	3.33	893.04	161.23	0.19
Below Strap	2643.3*	Max WS	100yrBaselineDCLC	2477.24	132.37	144.98		145.13	0.001667	3.29	899.23	162.10	0.19
Below Strap	2549.300	Max WS	100yrProposed_Da	2494.35	132.70	144.40		144.82	0.005124	5.26	532.49	134.43	0.31
Below Strap	2549.300	Max WS	100yrBaselineDCLC	2477.01	132.70	144.46		144.86	0.004926	5.17	540.52	136.39	0.30
Below Strap	2456.8*	Max WS	100yrProposed_Da	2500.01	132.27	144.10		144.40	0.003692	4.45	586.16	134.44	0.27
Below Strap	2456.8*	Max WS	100yrBaselineDCLC	2482.68	132.27	144.17		144.46	0.003528	4.37	596.03	137.73	0.26
Below Strap	2364.3*	Max WS	100yrProposed_Da	2499.85	131.85	143.87		144.10	0.002776	3.83	658.85	92.52	0.23
Below Strap	2364.3*	Max WS	100yrBaselineDCLC	2482.66	131.85	143.95		144.17	0.002650	3.76	666.54	93.89	0.23
Below Strap	2271.8*	Max WS	100yrProposed_Da	2499.73	131.43	143.69		143.87	0.002157	3.35	747.29	97.18	0.21
Below Strap	2271.8*	Max WS	100yrBaselineDCLC	2482.43	131.43	143.79		143.95	0.002052	3.29	756.21	97.89	0.20
Below Strap	2179.300	Max WS	100yrProposed_Da	2499.68	131.00	143.55		143.69	0.001719	2.97	840.64	106.27	0.19
Below Strap	2179.300	Max WS	100yrBaselineDCLC	2482.43	131.00	143.65		143.78	0.001629	2.92	851.23	107.02	0.18
Below Strap	2140.000	Max WS	100yrProposed_Da	2499.63	130.10	143.49		143.65	0.000581	3.13	796.63	113.63	0.18
Below Strap	2140.000	Max WS	100yrBaselineDCLC	2482.42	130.10	143.47		143.73	0.001384	4.05	612.64	99.16	0.26
Below Strap	2125.000	Max WS	100yrProposed_Da	2499.52	128.34	143.44	135.66	143.64	0.000648	3.50	697.76	65.82	0.18
Below Strap	2125.000	Max WS	100yrBaselineDCLC	2482.32	128.34	143.39	135.32	143.71	0.001437	4.54	547.32	59.85	0.25
Below Strap	2109.000			Bridge									
Below Strap	2093.000	Max WS	100yrProposed_Da	2499.57	128.34	143.39		143.60	0.000656	3.51	695.02	65.81	0.18
Below Strap	2093.000	Max WS	100yrBaselineDCLC	2482.20	128.34	143.27		143.59	0.001485	4.56	544.37	59.56	0.26
Below Strap	2092.5	Max WS	100yrProposed_Da	2499.46	128.34	143.27		143.57	0.001349	4.43	564.54	59.55	0.25
Below Strap	2092.5	Max WS	100yrBaselineDCLC	2482.19	128.34	143.23		143.56	0.001502	4.58	542.26	59.46	0.26
Below Strap	2045.100	Max WS	100yrProposed_Da	2499.51	128.00	143.33		143.54	0.001447	3.65	688.99	98.67	0.22
Below Strap	2045.100	Max WS	100yrBaselineDCLC	2482.07	128.00	143.32		143.52	0.001435	3.63	687.63	98.66	0.22
Below Strap	2000			Lat Struct									
Below Strap	1969.8*	Max WS	100yrProposed_Da	2499.56	128.60	143.26		143.44	0.001178	3.38	741.93	101.73	0.20
Below Strap	1969.8*	Max WS	100yrBaselineDCLC	2482.18	128.60	143.25		143.43	0.001168	3.36	740.60	101.20	0.20
Below Strap	1894.5*	Max WS	100yrProposed_Da	2499.41	129.20	143.21		143.36	0.000974	3.14	797.28	100.07	0.19
Below Strap	1894.5*	Max WS	100yrBaselineDCLC	2482.07	129.20	143.19		143.35	0.000965	3.12	796.03	98.98	0.19
Below Strap	1819.19*	Max WS	100yrProposed_Da	2499.36	129.80	143.16		143.29	0.000813	2.92	856.83	95.87	0.17
Below Strap	1819.19*	Max WS	100yrBaselineDCLC	2481.95	129.80	143.15		143.28	0.000804	2.90	855.66	95.83	0.17
Below Strap	1743.899	Max WS	100yrProposed_Da	2499.40	130.40	143.12		143.24	0.000687	2.72	920.06	101.28	0.16
Below Strap	1743.899	Max WS	100yrBaselineDCLC	2482.06	130.40	143.11		143.22	0.000680	2.70	918.87	101.24	0.16

Average velocity of flow in main channel.