Meeting of the Central Valley Flood Protection Board
May 19, 2017

Permit Staff Report

The City of Yuba City
Fifth Street Bridge Replacement, Yuba County

1.0 – ITEM

Consider approval of Permit No. 19111. (Attachment B)

2.0 – APPLICANT

City of Yuba City. (City)

3.0 – PROJECT LOCATION

The project connects Bridge Street in Yuba City to Fifth Street in Marysville and spans the Feather River.
(Feather River, Yuba County, see Attachment A)

4.0 – PROJECT DESCRIPTION

The City proposes to remove and replace the existing two-lane Fifth Street Bridge (Bridge No. 18C-0012) over the Feather River, between Yuba City and Marysville, with a new four-lane bridge. The new bridge includes a ten-foot wide Class 1 multi-use path. The project also includes reconstruction of the bridge approaches, rock slope protection, improvements to adjacent pedestrian trails, bicycle trails, retaining wall, and levee access ramps, and mitigation plantings in the floodway.

5.0 – AUTHORITY OF THE BOARD

California Water Code § 8534, 8590 – 8610.5, and 8700 – 8710

California Code of Regulations, Title 23, Division 1 (Title 23):

- § 6 – Need for a Permit
- § 11(d) – Waiver of Standard
- § 112 – Streams Regulated and Nonpermissible Work Periods
- § 120 – Levees
- § 121 – Erosion Control
- § 125 – Retaining Wall
- § 128 – Bridges

6.0 – PROJECT ANALYSIS

The City, in cooperation with the City of Marysville and the California Department of Transportation, proposes to replace the bridge between Bridge Street in Yuba City (Sutter County) and 5th Street in Marysville (Yuba County). The bridge crosses over the Feather River. A curved horizontal alignment is proposed for the new structure to separate the new bridge from the existing structure, and to maintain traffic flow during construction while utilizing the same bridge approach locations. The proposed bridge includes four 12-foot travel lanes, shoulders, a median barrier, and a ten-foot wide Class I multi-use path on the north side for a total bridge width of 76.5 feet. The bridge will be a ten-span cast-in place (CIP) post-tensioned concrete box girder bridge with a total length of 1868 feet. The structure depth is eight-feet for nine spans and it varies linearly from 8-feet to 4-feet in span 10 to accommodate the three foot clearance requirements at the Marysville levee (Attachment C).

The piers are perpendicular to the bridge centerline. Each pier will include three seven foot square columns supported on ten foot diameter Cast-In-Drilled Hole (CIDH) piles. The abutments will be aligned with the levee contours and will be supported with vertical CIDH piles that will be drilled through the levee. Rock slope protection will be placed to protect the abutments from scour. The bridge was designed so as not to impact the levee slurry wall that was constructed as part of the Marysville Ring Levee Project.

6.1 – Hydraulic Analysis

A regional HEC-RAS hydraulic model was developed for the Feather River West Levee Project by Peterson Brustad Inc. working with Sutter Butte Flood Control Agency. This unsteady state model was used as the basis of the hydrologic and hydraulic analysis for this project. The USACE design flow for the Feather River at this location is 210,000 cubic feet per second (CFS) and was used to determine the clearance requirements. The lowest soffit elevation is located at abutment 11 at 83.15 feet - North American

Vertical Datum (NAVD 88). The water surface elevation (WSE), using the design flow, was determined to be 79.95 feet - NAVD 88 resulting in 3.2 feet of clearance meeting Title 23 § 128 (a) (10)(A) of three feet above the design flood plain. The 200-year flow as determined by HEC-RAS model is 169,250 CFS and produces a WSE of 77.9 feet, resulting in 5.25 feet of clearance. Due to the channel geometry, the alignment of the piers were designed to have the least impact on flow in the project area. The WSE remains the same for both pre and post project; therefore, the proposed project is expected to result in no adverse hydraulic impacts to the Feather River (Attachment D).

6.2 – Geotechnical Analysis

In 2013, Earth Mechanics, Inc. conducted geotechnical studies and provided the analysis to Dokken Engineering to design the bridge replacement project. A foundation report was prepared that has analysis from 13 geotechnical borings used to determine the subsurface conditions as well as information obtained from previous reports.

Due to the seismicity and liquefaction potential at the project site, high vertical and lateral load demands are anticipated on the bridge foundations. Therefore, a deep foundation system using 118-inch diameter CIDH piles were recommended for pier foundations. The project is using 120-inch diameter pier foundations. Caltrans Bridge Design Specifications were used to properly design the bridge using the analysis provided in the foundation report. (Attachment E)

6.3 – Project Waivers of Title 23 Standards

The City has requested a variance to Title 23 § 128 (a)(3), which requires bridge piers and bents within the floodway to be constructed parallel to the direction of stream flow. In the bridge vicinity, the Feather River channel narrows from north to south. In addition, the Marysville (east) levee protrudes over 250 feet into the channel. The narrowing channel and levee protrusion into the floodplain makes it difficult to predict the direction of flow at the bridge across the entire channel; therefore, an assumed primary flow direction was used to estimate skew angles. Due to the curved horizontal alignment the piers have different bearings. The requested variance has been reviewed by Board staff and after consulting with the Board's legal counsel, has recommended to the Executive Officer (EO) that pursuant to Title 23, § 11 (d), there is no legitimate reason for the application of the above referenced standard for the following reason:

The intention of § 128 (a)(3) is to reduce the possibility of flow obstruction. However, due to the various flow directions, choosing a single best fit pier bearing would result in

more obstruction to the flow than the proposed piers on varying bearings that align with the constriction shape near each bank.
Based on this reason, the EO concurs with Board staff's recommendation to waive the Title 23 § 128 (a)(3) standard. The approved waiver will only apply to the project as shown on the approved plans and specifications and would not apply to any future addenda or requested construction variances without further consultation, review, and concurrence by Board staff, the Board's legal counsel, and the EO.

7.0 – AGENCY COMMENTS AND ENDORSEMENTS

The comments and endorsements associated with this project, from all pertinent agencies, are shown below:

- Levee District 1 endorsed this application with conditions on May 2, 2016. All applicable conditions have been incorporated into the permit (Attachment F).
- Marysville Levee Commission endorsed this application with conditions on March 3, 2016. All applicable conditions have been incorporated into the permit (Attachment G).

- The U.S. Army Corps of Engineers (USACE) 33 U.S.C. 408 approval letter has not yet been received for this application. Staff anticipates receipt of a letter indicating that the USACE Sacramento District Engineer approves the request to alter the Federal flood risk reduction project, subject to conditions. Upon receipt of the letter, staff will review to ensure its conformity with the permit language and incorporate it into the permit as Exhibit A.

8.0 – CEQA ANALYSIS

Board staff has prepared the following California Environmental Quality Act (CEQA) findings:

The Board, acting as a responsible agency under CEQA, has independently reviewed the 5th Street Bridge Replacement Project Final Initial Study/Mitigated Negative Declaration/Environmental Assessment (IS/MND/EA) (SCH No. 2013082011, August 2014), the Finding of No Significant Impact (FONSI) and the Mitigation Monitoring and Reporting Plan (MMRP) summited by the National Environmental Policy Act (NEPA) lead agency, California Department of Transportation (Caltrans), and the CEQA lead agency, City of Yuba. These documents, including project design and the MMRP, may be viewed or downloaded from the Central Valley Flood Protection Board website at http://www.cvfpb.ca.gov/event/may-2017-board-meeting/ under a link for this agenda

item. The documents are also available for review in hard copy at the Board and City of Yuba offices.

The City of Yuba determined the project would not have a significant effect on the environmental and filed a Notice of Determination with the State Clearinghouse on August 21, 2014. Similarly, Caltrans determined the project would not have a significant effect on the environmental and issued a FONSI on August 27, 2014. Based on its independent review of the IS/MND/EA, the Board finds that although the proposed project could have a potentially significant effect on the environment, revisions have been made to the project and/or agreed to by the project proponent that reduce the environmental impacts to less than significant. The Board finds that there are no direct or indirect environmental effects of the bridge work which have not been previously addressed by the IS/MND/EA. Pursuant to CEQA, the Board as a responsible agency is responsible for mitigating and avoiding only the direct and indirect environmental effects of those parts of the project which it decides to carry out, finance, or approve [CEQA Guidelines Section 15096(g); Public Resources Code § 21002.1(d)].

The project proponent has incorporated mandatory mitigation measures into the project plans to avoid identified impacts or to mitigate such impacts to a point where no significant impacts will occur. Moreover, such changes or alterations are within the responsibility and jurisdictions of another public agency, Caltrans and City of Yuba, and such changes have been adopted by those agencies. These mitigation measures are included in the project proponent's IS/MND/EA and address impacts to biological resources, hazardous waste, and noise. The description of the mitigation measures are further described in the certified IS/MND/EA.

The documents and other materials which constitute the record of the Board's proceedings in this matter are in the custody of the Executive Officer, Central Valley Flood Protection Board, 3310 El Camino Ave., Suite 170, Sacramento, California 95821.

9.0 – CALIFORNIA WATER CODE SECTION 8610.5 CONSIDERATIONS

1. Evidence that the Board admits into its record from any party, State or local public agency, or nongovernmental organization with expertise in flood or flood plain management:

   The Board will make its decision based on the evidence in the permit application and attachments, this staff report, and any other evidence presented by any individual or group.

2. The best available science that relate to the scientific issues presented by the executive officer, legal counsel, the Department of Water Resources or other parties that raise credible scientific issues.

   The accepted industry standards for the work proposed under this permit as regulated by Title 23 have been applied to the review of this permit.

3. Effects of the decision on facilities of the State Plan of Flood Control (SPFC), and consistency of the proposed project with the Central Valley Flood Protection Plan (CVFPP) as adopted by Board Resolution 2012-25 on June 29, 2012:

   The WSE remains the same for both pre and post project conditions; therefore, the proposed project is expected to result in no adverse impacts to the facilities of the State Plan of Flood Control and is consistent with the Central Valley Flood Protection Plan by improving public safety.

4. Effects of reasonable projected future events, including, but not limited to, changes in hydrology, climate, and development within the applicable watershed:

   The project evaluated both a 100-year and 200-year event and found no change to water surface elevations due to the new construction. Therefore, it is expected there will be no effects to the proposed project from reasonable projected future events.

10.0 – STAFF RECOMMENDATION

Adopt:

- The CEQA findings:

Approve:

- Draft Encroachment Permit No. 19111 in substantially the form provided; and conditioned upon receipt of the USACE approval letter indicating that the District Engineer has no objection to the project, subject to conditions, and

Direct:

- The Executive Officer to take the necessary actions to execute the permit and file a Notice of Determination pursuant to CEQA with the State Clearinghouse.

11.0 – LIST OF ATTACHMENTS

A. Location Maps and Photos
B. Draft Permit No. 19111
C. Project Description
D. Hydraulic Summary
E. Geotechnical Summary
F. Levee District 1 Endorsement
G. Marysville Levee Commission Endorsement

Design Review:	Ilene Wellman-Barbree, P.E., Permitting Section Staff
Geotechnical Review:	Deb Biswas, P.E., Permitting Section Staff
Environmental Review:	Ruth Darling, – Environmental Services and Land Management Branch Staff
Document Review:	Mike Thao, Acting Permitting Section Chief
	Gary W. Lemon, P.E., Acting Operations Branch Chief
	Mitra Emami, P.E., Acting Chief Engineer
Legal Review:	Kanwarjit Dua, Board Counsel

Source: Digital Globe 2/1/2008; Dokken Engineering 10/22/2010; Created By: A. Scudiere

0 0.5 Miles

ATTACHMENT 1
PROJECT VICINITY

Federal Project No. BHLVS-5918(062)
Fifth Street Bridge over theFeather River
City of Yuba City, City of Marysville,
Yuba County, and Sutter County, California

5th St Brg-looking west

MSVL-LEVEE-looking west at 5th St Brg

DRAFT

STATE OF CALIFORNIA
THE RESOURCES AGENCY

THE CENTRAL VALLEY FLOOD PROTECTION BOARD

PERMIT NO. 19111 BD

This Permit is issued to:

City of Yuba City
1201 Civic Center Blvd
Yuba City, California 95993

The 5th Street Bridge Replacement Project includes removal of the existing two-lane 5th Street Bridge (Bridge No. 18C-0012) over the Feather River, between Yuba City and Marysville, and reconstruction to a four-lane bridge with a ten-foot wide Class 1 multi-use path. The project includes reconstruction of the approach roadways to the bridge in both cities, relocation of existing utilities (under separate permits), improvements to adjacent pedestrian, bicycle trails, and levee access ramps, and removal and replacement of trees in the floodway.

5th Street Bridge connects Bridge Street in Yuba City to Fifth Street in Marysville, at 39.13890˚N -121.60610˚W, Feather River, Yuba County, CA.

NOTE: Special Conditions have been incorporated herein which may place limitations on and/or require modification of your proposed project as described above.

(SEAL)

Dated: _____ _____
Executive Officer

GENERAL CONDITIONS:

ONE: This permit is issued under the provisions of Sections 8700 – 8723 of the Water Code.

TWO: Only work described in the subject application is authorized hereby.

THREE: This permit does not grant a right to use or construct works on land owned by the Sacramento and San Joaquin Drainage District or on any other land.

FOUR: The approved work shall be accomplished under the direction and supervision of the State Department of Water Resources, and the

permittee shall conform to all requirements of the Department and The Central Valley Flood Protection Board.

FIVE: Unless the work herein contemplated shall have been commenced within one year after issuance of this permit, the Board reserves the right to change any conditions in this permit as may be consistent with current flood control standards and policies of The Central Valley Flood Protection Board.

SIX: This permit shall remain in effect until revoked. In the event any conditions in this permit are not complied with, it may be revoked on 15 days' notice.

SEVEN: It is understood and agreed to by the permittee that the start of any work under this permit shall constitute an acceptance of the conditions in this permit and an agreement to perform work in accordance therewith.

EIGHT: This permit does not establish any precedent with respect to any other application received by The Central Valley Flood Protection Board.

NINE: The permittee shall, when required by law, secure the written order or consent from all other public agencies having jurisdiction.

TEN: The permittee is responsible for all personal liability and property damage which may arise out of failure on the permittee's part to perform the obligations under this permit. If any claim of liability is made against the State of California, or any departments thereof, the United States of America, a local district or other maintaining agencies and the officers, agents or employees thereof, the permittee shall defend and shall hold each of them harmless from each claim.

ELEVEN: The permittee shall exercise reasonable care to operate and maintain any work authorized herein to preclude injury to or damage to any works necessary to any plan of flood control adopted by the Board or the Legislature, or interfere with the successful execution, functioning or operation of any plan of flood control adopted by the Board or the Legislature.

TWELVE: Should any of the work not conform to the conditions of this permit, the permittee, upon order of The Central Valley Flood Protection Board, shall in the manner prescribed by the Board be responsible for the cost and expense to remove, alter, relocate, or reconstruct all or any part of the work herein approved.

SPECIAL CONDITIONS FOR PERMIT NO. 19111 BD

LIABILITY AND INDEMNIFICATION

THIRTEEN: The permittee shall defend, indemnify, and hold the Levee District No. 1 of Sutter County, the Marysville Levee District, the Central Valley Flood Protection Board (Board), and the State of California, including its agencies, departments, boards, commissions, and their respective officers, agents, employees, successors and assigns (collectively, the "State"), safe and harmless, of and from all claims and damages related to the Board's approval of this permit, including but not limited to claims filed pursuant to the California Environmental Quality Act. The State expressly reserves the right to supplement or take over its defense, in its sole discretion.

FOURTEEN: The permittee is responsible for all liability associated with construction, operation, and maintenance of the permitted facilities and shall defend, indemnify, and hold the Levee District No. 1 of Sutter County, the Marysville Levee District, the Board and the State, safe and harmless, of and from all claims and damages arising from the project undertaken pursuant to this permit, all to the extent allowed by law. The State expressly reserves the right to supplement or take over its defense, in its sole discretion.

FIFTEEN: The Board, Department of Water Resources, and the Levee District No. 1 of Sutter County, and the Marysville Levee District shall not be held liable for any damages to the permitted encroachment(s) resulting from releases of water from reservoirs, flood fight, operation, maintenance, inspection, or emergency repair.

AGENCY CONDITIONS

SIXTEEN: All work approved by this permit shall be in accordance with the submitted drawings and specifications dated August 11, 2016 except as modified by special permit conditions herein. No further work, other than that approved by this permit, shall be done in the area without prior approval of the Central Valley Flood Protection Board.

SEVENTEEN: Permittee shall pay to the Board, an inspection fee(s) to cover inspection cost(s), including staff and/or consultant time and expenses, for any inspections before, during, post-construction, and regularly thereafter as deemed necessary by the Board.

EIGHTEEN: The permittee shall be responsible for the repair of any damages to the project levee, channel, banks, floodway, or other flood control facilities due to construction, operation, or maintenance of the proposed project.

NINETEEN: The permittee shall comply with all conditions set forth in the letter from the Department of the Army (U.S. Army Corps of Engineers, Sacramento District) dated _____, which is attached to this permit as Exhibit__ and is incorporated by reference.

PRE-CONSTRUCTION

TWENTY: Upon receipt of a signed copy of the issued permit the permittee shall contact the Board by telephone at (916) 574-0609, and submit the enclosed postcard, to schedule a preconstruction conference with the inspector that is assigned to your project. Failure to do so at least 10 working days prior to start of work may result in a delay of the project.

CONSTRUCTION

TWENTY-ONE: No construction work of any kind shall be done during the flood season from November 1 to April 15 without prior approval of the Board. Failure to submit a Time Variance Request to the Board at least 10 working days prior to November 1 may result in a delay of the project.

TWENTY-TWO: All cleared trees and brush shall be completely removed from the floodway, and downed trees or brush shall not remain in the floodway during the flood season from November 1 to April 15.

TWENTY-THREE: The abandoned or dismantled bridge shall be completely removed and disposed of outside the limits of the levee section and floodway.

TWENTY-FOUR: Piers, bents, and abutments being dismantled shall be removed to at least 1 foot below the natural ground line and at least 3 feet below the bottom of the low-water channel.

VEGETATION / ENVIRONMENTAL MITIGATION

TWENTY-FIVE: The mitigation measures approved by the CEQA lead agency and the permittee are found in its Mitigation and Monitoring Reporting Program (MMRP) adopted by the CEQA lead agency. The permittee shall implement all such mitigation measures.

POST-CONSTRUCTION

TWENTY-SIX: The work area shall be restored to the condition that existed prior to start of work.

TWENTY-SEVEN: Within 120 days of completion of the project, the permittee shall submit to the Board and DWR an electronic copy of as-built drawings, stamped and signed by a licensed civil engineer registered in the State of California, certifying the work was performed and inspected in accordance with the Board permit conditions and submitted drawings and specifications.

OPERATIONS AND MAINTENANCE

TWENTY-EIGHT: The permittee shall maintain the permitted encroachment(s) and the project works within the utilized area in the manner required and as requested by the authorized representative of the Central Valley Flood Protection Board, the Department of Water Resources, or any other agency responsible for maintenance and shall, at all times, allow officials from these agencies to access the levee, levee slope, and any adjacent areas as necessary for flood control.

END OF CONDITIONS

Project Description for CVFPB Permit

For the purposes of the Central Valley Flood Protection Board (CVFPB) Permit Application, this project description is limited to the work performed within CVFPB's jurisdictional limits, with brief reference to the overall project. The limits are defined as the project area between the west levee of the Feather River in Yuba City and the east levee in Marysville, and extending 10 feet landward from the levee toe.

Project Introduction

The City of Yuba City, in cooperation with the City of Marysville and the California Department of Transportation (Caltrans), proposes to replace the Fifth Street Bridge (Bridge Number 18C-0012), also known as the Twin Cities Memorial Bridge, over the Feather River and improve approach roadways to the bridge. The City has obtained authorization for replacement and has initiated project development with Caltrans Local Assistance oversight.

The existing facility connects Bridge Street in Yuba City to Fifth Street in Marysville. Project limits in the City of Marysville span from Fifth and J Street intersection and portions of J Street between Fourth and Fifth Streets, portions of Riverfront Park in the west and continuing over the Feather River into the City of Yuba City limits. Project limits within the City of Yuba City include the roadway along Second Street, small portions of Sutter, Yolo and Boyd Streets in the south and the western expanse of Bridge Street at the intersection with Second Street and terminating just past the intersection at Shasta Street.

The proposed design for the bridge replacement project balances considerations for connections to existing facilities, current National and State regulations for flood control clearance, bike and pedestrian facilities, structural standards and safety, as well as local considerations for speed, lane and shoulder widths, traffic patterns and connectivity.

Bridge

The proposed bridge cross section includes four 12' travel lanes, shoulders, a median barrier, and a 10' Class I multi-use path on the north side for a total bridge width of 76.5'. Fifth Street Bridge will be a 10-span cast-in-place (CIP) post-tensioned concrete box girder bridge with a total length of 1868 feet, comprised of three frames of lengths, 563', 600', and 705'. The typical span lengths are 200', while the end spans are 135' at Abutment 1 and Abutment 11, and 198' at span 2. The structure depth is 8'-0" for nine spans and it varies linearly from 8' to 4' in Span 10 to accommodate freeboard requirements at the Marysville levee (see attached Bridge Plans for details).

Columns

A curved horizontal alignment was used to separate the new bridge from the existing structure, to maintain traffic flow during construction, while still utilizing the same touchdown locations in each city. The piers are designed perpendicular to the bridge centerline, with the exception of pier 2 where the pier is skewed 20 degrees to better align with the natural channel and levee toe. The bearing of each pier varies. Each pier will include three 7' square columns, with architectural detailing, supported on 10' diameter cast-in-drilled-hole (CIDH) piles.

DIST	COUNTY	ROUTE	POST MILES TOTAL PROJECT	SHEET No	TOTAL SHEETS
03	Sut/Yub	Local			

REGISTERED CIVIL ENGINEER DATE

PLANS APPROVAL DATE

REGISTERED PROFESSIONAL ENGINEER ROSA GRIGGS No. 54169 Exp. 12-31-15 CIVIL STATE OF CALIFORNIA

CITY OF YUBA CITY
1201 CIVIC CENTER BOULEVARD
YUBA CITY, CA 95993

Dokken Engineering
110 Blue Ravine Rd, Suite 200
Folsom, CA 95630 (916) 858-0642

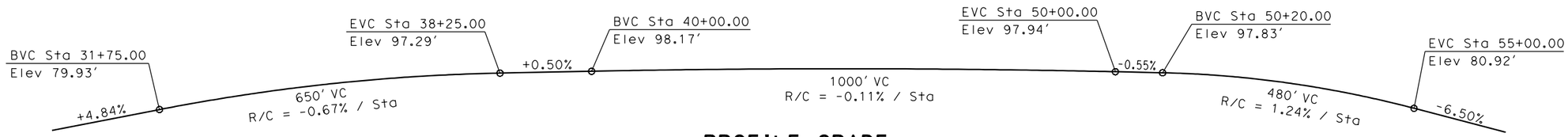

PROFILE GRADE

No Scale

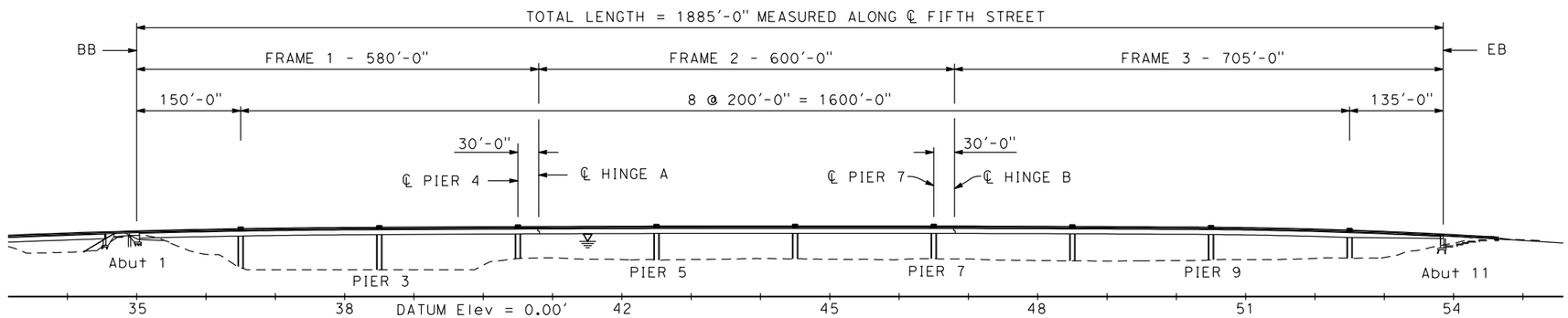

DEVELOPED ELEVATION

1" = 100'

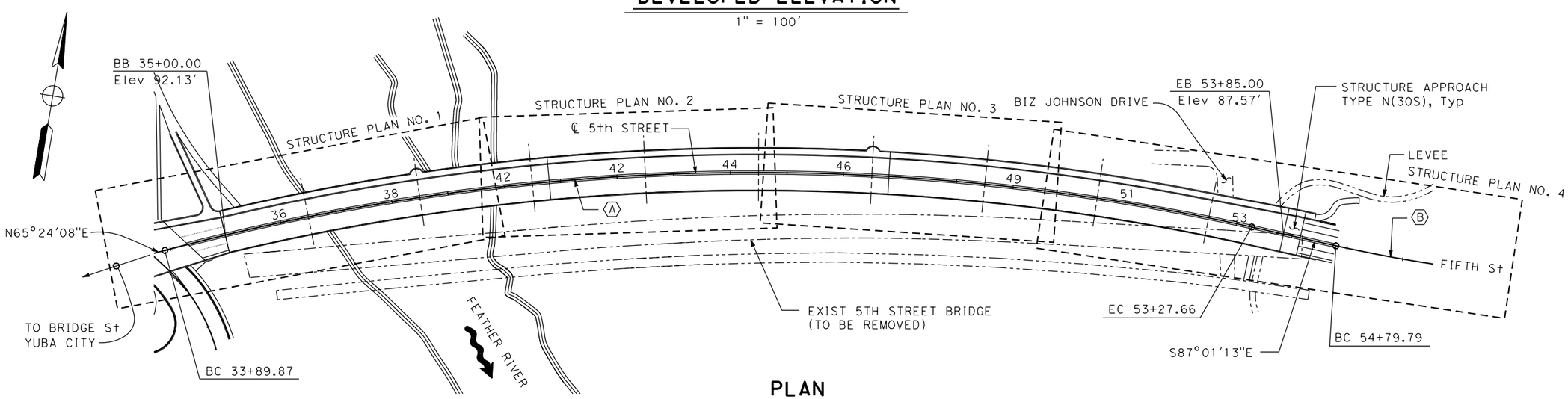

PLAN

1" = 100'

100 yr WSE = 76.3
200 yr WSE = 79.6

CURVE DATA

A	B
R = 4026.01'	R = 2763.64'
△ = 27°34'39"	△ = 9°06'01"
T = 1937.79'	T = 424.66'
L = 988.05'	L = 219.94'

NOTES:

1. All Elevations are NAVD 88.
2. Typical Sections on separate sheets.

DESIGN OVERSIGHT	DESIGN	BY R. Griggs	CHECKED T. Osterkamp	LOAD & RESISTANCE FACTOR DESIGN	LIVE LOADING: HL93 W/"LOW-BOY"; PERMIT DESIGN VEHICLE
	DETAILS	BY K. Dang	CHECKED	LAYOUT	BY / CHECKED
SIGN OFF DATE	QUANTITIES	BY	CHECKED	SPECIFICATIONS	BY / PLANS AND SPECS COMPARED

PREPARED FOR THE CITY OF YUBA CITY DEPARTMENT OF PUBLIC WORKS

T. Osterkamp
PROJECT ENGINEER

BRIDGE NO. 18C0012
POST MILES

5TH STREET BRIDGE OVER FEATHER RIVER
GENERAL PLAN

DESIGN GENERAL PLAN SHEET (ENGLISH) (REV.7/16/10)

ORIGINAL SCALE IN INCHES FOR REDUCED PLANS 0 1 2 3

UNIT: -
PROJECT NUMBER & PHASE: -
CONTRACT NO.: X

DISREGARD PRINTS BEARING EARLIER REVISION DATES

REVISION DATES				SHEET	OF
X				1	-

FILE => J:\1858_5th_St_BR\517\5th BRIDGE\1858GP1.dgn

USERNAME => untitled DATE PLOTTED => 1/28/2016 TIME PLOTTED => 2:35:06 PM

Addendum to the CVFPB Encroachment Permit

Bridge Soffit Meets Requirement for Freeboard

This addendum addresses changes to the "Supplemental Hydraulic Analysis to Document USACE Design Flow Results…Temporary Construction Staging" memorandum, which identifies the available freeboard for the proposed 5th Street Bridge as 2.7 feet above the US Army Corps of Engineers (USACE) Design Flow water surface elevation.

According to Section 128 (a)(10)(A) of California Code of Regulations Title 23, "the bottom members (soffit) of a proposed bridge must be at least three (3) feet above the design flood plain." The modeling and results provided in the "Supplemental Hydraulic Analysis…" memorandum indicate the USACE design flow results in the highest water surface elevation and is, therefore, the "design flood plain" to be used for this requirement.

In order to achieve the required freeboard and avoid a variance request, the following bridge design modifications and soffit elevation clarifications have been made and are shown in the attached Profile Exhibit and hand calculations.

1. Cross slope adjustment – The cross slope of the wider upstream side of the bridge was changed to 1.5%, from 2%.

2. Freeboard at face of abutment – The previous clearance for freeboard was calculated at the End of Bridge, identified at Station "F" 53+85.00. Freeboard clearance is now calculated at Face of Abutment, identified at Station "F" 53+80.50.

The left side of the bridge is wider, due to the Class I multi-use path, which causes the upstream side of the bridge soffit to be lower than the downstream side. On both sides of the bridge, the soffit does not extend the full width of the bridge due to the aesthetic overhang. The overhang is approximately 4.5 feet wide.

In addition to the change in structure depth from 8-ft to 4-ft, the left side of the bridge gets wider to accommodate construction staging, across the length of Span 10. It widens by approximately 3.5 ft. Therefore, the upstream side of the soffit is approximately 43 feet wide at End of Bridge.

Face of abutment is where the water surface touches the bridge structure and End of Bridge is 4.5 feet beyond that where the superstructure is supported by the abutment seat. Since the profile of the road is dropping at this location in order to achieve the necessary clearance underneath the Union Pacific Railroad Bridge east of the river and levee, a difference of 4.5 feet is significant. Therefore, the calculation for soffit elevation was revised to represent the soffit at face of abutment.

Please find attached the Profile Exhibit, which shows the various water surface elevations for each design flood criteria and the associated freeboard required. A dashed line below the soffit

of the bridge represents the cross slope adjustment at the upstream edge of soffit. The soffit elevation, as shown in the hand calculations is identified at the face of each abutment, Abutment 1 in Yuba City and Abutment 11 in Marysville.

The following tables summarize the water surface elevations per design criteria, the soffit elevations, and the freeboard achieved for each criteria.

Water Surface Elevations at Upstream Side of Fifth Street Bridge

Bridge Condition	Water Surface Elevation (feet)		
	USACE Design Flow	200-Year	100-Year
Existing RS 27.971	79.95	77.89	74.79
Proposed RS 27.996	79.95	77.90	74.78

Elevation at Upstream Side of Bridge Soffit

Abutment No.	Soffit Elevation (feet)
	USACE Design Flow
1	83.81
11	83.15

Available Freeboard for the Proposed 5th Street Bridge

Bridge Condition	Freeboard (feet)		
	USACE Design Flow	200-Year	100-Year
Proposed	3.20	5.25	8.37

Prepared by:

Megan R Carter

Megan Carter, PE
Associate Engineer
DOKKEN ENGINEERING

6/16/16
Date

REGISTERED PROFESSIONAL ENGINEER
MEGAN R. CARTER
No. 75885
Exp. Jun. 30, 2018
CIVIL
STATE OF CALIFORNIA

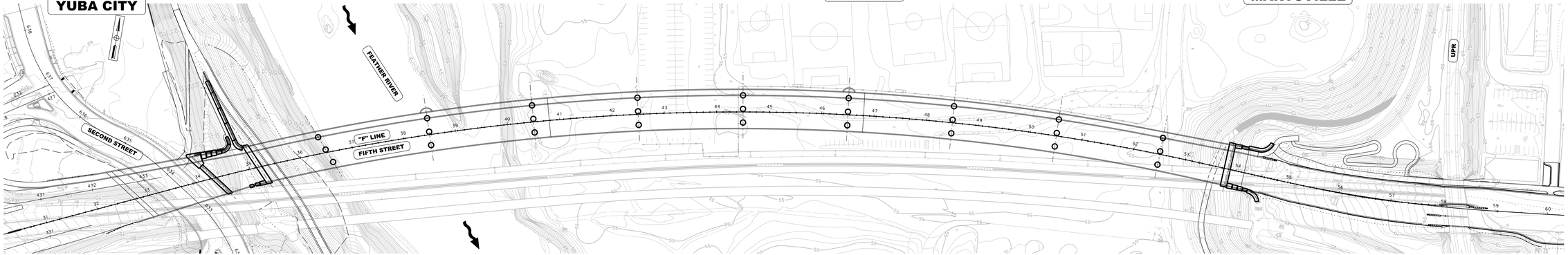

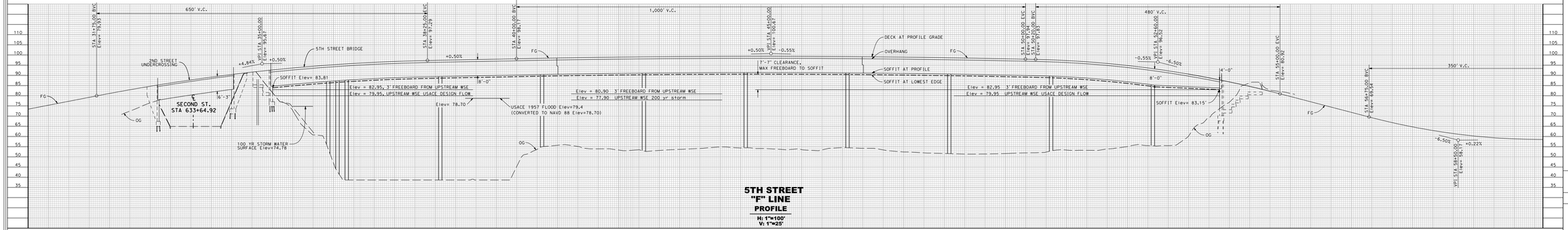

PROJECT

FIFTH STREET BRIDGE REPLACEMENT

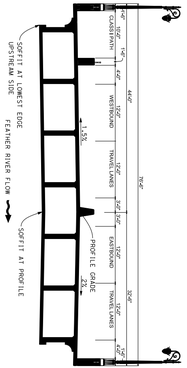

TYPICAL BRIDGE SECTION

EXHIBIT NO. PROFILE

DATE: JUNE 2016 | SCALE: 1"=100'

PREPARED BY:

DOKKEN ENGINEERING
916 Blue Ravine Road, Suite 200
Folsom, CA. 95630
(916) 858-0642

...\CVFFB\1856_ProfileExhibit.dgn

Fifth Street Freeboard – Abut 11

Elev @ EB = 87.57'

Elev @ Face of Abut (Sta. 53+80.5) = 87.79'

Cross Slope: left side = (1.5%)(42.94) = 0.644'

right side = (2.0%)(28.00') = 0.528'

structure depth = 4'-0"

Soffit Elev = (Elev @ Face of Abut) – (Cross Slope) – (Struct depth)

= 83.15'

ACOE Event WSE = 79.95'

freeboard = 3.20' > 3.0 ✓ OK

JOB	SUBJECT	DATE	JOB NO.
5th Street Bridge	Freeboard	6/2/16	1858
		BY RCG	SHEET 1
		CHECK	of 2

Freeboard (cont'd)

Abut 1:

Elev @ BB = 92.58'

Elev @ face of Abut (include skew) = 92.40'
(35+10.15)

Cross-slope left = (1.5%)(39.5') = 0.593'

right = (2.0%)(28.0') = 0.528'

Structure Depth = 8'-0"

Soffit Elev = 83.81'

Freeboard = 83.81' - $\underbrace{79.95'}_{\text{WSE}}$

= 3.86' > 3.0' ✓ OK

JOB	SUBJECT	DATE 6/2/16	JOB NO. 1858
		BY	SHEET 2
		CHECK	of 2

Table 2. Soil Exploration Information performed by EMI

Boring No.	Approx. Station	Boring Type	Station Line	Approx. Offset (ft)	Approx. Ground Surface El. (ft)	Approx. Bottom of Hole El. (ft)	Approx. Groundwater El. During Drilling (ft)
R-13-001	34+82	RW	"F" Line	14 Lt.	+85.2	-84	+42.2
R-13-002	35+91	HSA	"F" Line	14 Lt.	+61.8	+56.7	NE
WR-13-003	38+47	RW	"F" Line	20 Lt.	+27.6	-139.4	NM
R-13-004	40+42	RW	"F" Line	17 Lt.	+55	-85.5	+31
R-13-005	42+61	RW	"F" Line	4 Rt.	+52.5	-90.5	+46.5
R-13-006	44+50	RW	"F" Line	26 Lt.	+54.5	-85.5	+48.5
R-13-007	46+50	RW	"F" Line	15 Lt.	+54	-86	+45.5
R-13-008	48+50	RW	"F" Line	27 Lt.	+53	-87	+41
R-13-009	50+50	RW	"F" Line	26 Lt.	+51.2	-86.3	NM
R-13-010	52+40	RW	"F" Line	6 Rt.	+55.4	-89.5	NM
R-13-011	54+35	RW	"F" Line	26 Lt.	+87	-14.5	+44
R-13-012	32+73	RW	"F" Line	32 Lt.	+61.8	-38.6	+39.8
R-13-013	33+90	RW	"F" Line	2 Rt	+63.4	-38.1	+53.4
HA-13-014	NM	HA	"F" Line	NM	+61.0	+60.0	NM

Notes:

1. Stations and offsets are approximate.
2. GSE = Ground Surface Elevation estimated from topographic plans
3. HSA = Hollow-Stem Auger; RW = Rotary Wash; HA = Hand Auger.
4. NE = Not Encountered, NM = Not Measured
5. All elevations are based on NAVD88.

Our field representatives visually classified the soil cuttings in accordance with Caltrans' Soil and Rock Logging Classification Manual (2010a) and maintained a detailed record of subsurface materials as well as the groundwater conditions encountered in the exploratory borings. The Log-of-Test-Borings (LOTB) sheets, and other pertinent information are presented in Appendix A. It should be noted that the lines designating the interface between materials on the LOTB sheets and boring records generally represent approximate boundaries. The actual transition between subsurface materials is usually gradual.

Table 9. Foundation Design Loads for the 5th Street Bridge

Support No.	Service-I Limit State (kips)			Strength Limit State (Controlling Group, kips)				Extreme Event Limit State (Controlling Group, kips)			
	Total Load		Perm-anent Loads	Compression		Tension		Compression		Tension	
	Per Support	Max. Per Pile	Per Support	Per Support	Max. Per Pile	Per Support	Max. Per Pile	Per Support	Max. Per Pile	Per Support	Max. Per Pile
Abutment 1	1217	183	629	6506	267	0	0	-	-	0	0
Bent 2	7985	2927	7323	11113	4101	0	0	3,799	1,503	0	0
Bent 3	8389	3079	7718	11581	4245	0	0	3,620	1,599	0	0
Bent 4	9138	3287	8487	12587	4514	0	0	4,005	1,945	0	0
Bent 5	7780	2939	7053	10800	4059	0	0	3,773	1,551	0	0
Bent 6	7804	2983	7138	10592	3997	0	0	3,762	1,638	0	0
Bent 7	8617	3167	7839	11735	4314	0	0	4,321	1,723	0	0
Bent 8	7745	2924	7011	10773	4051	0	0	3,927	1,550	0	0
Bent 9	7889	3019	7230	10617	4006	0	0	3,936	1,569	0	0
Bent 10	7191	2760	6523	9942	3807	0	0	4,443	1,843	0	0
Abutment 11	1066	155	636	4590	215	0	52	-	-	0	0

5.6.1 Downdrag Load Due to Liquefaction

According to Figures 5A through 5C, a 15 to 35 feet thick potentially liquefiable layer is present underneath the Bent 3 through Abutment 11. Wherever this layer is present, the downdrag loads from settlement of the liquefiable layer should be considered in determining design pile lengths.

According to EMI's analyses on existing CPTs (DE-CPT-02 to DE-CPT-06) (Section 5.2.4), seismically-induced settlements were estimated to be up to 7 inches in the region between proposed Bent 3 to 10, with a settlement zone up to a depth of 35 feet. A neutral axis analysis was performed to determine the downdrag loads on CIDH piles. A neutral axis for downdrag is an elevation along the pile, above which the soil applies negative skin friction on pile. Assuming a displacement of 0.1 to 0.5 inch is needed to mobilize friction between the soil and pile, the neutral axis for downdrag consideration for Bent 3 through Bent 10 was estimated to be at elevation of +30 feet.

For the Service Load Limit State with a permissible pile-head settlement of 1 inch, a downdrag load equal to two times the soil resistance above the neutral axis was added to the service load, according to the AASHTO (2010) procedure (Section 10.7.4).

For the Extreme Event Limit State, piles were designed for the liquefied condition, as a worse case scenario. For CIDH piles in the zones with liquefaction induced settlement potential (Bent 3 through Abutment 11), downdrag loading was considered. However, it should be noted that in absence of an allowable displacement criteria, liquefaction induced downdrag has no impact on

LEVEE DISTRICT NO. 1 – ENDORSEMENT CONDITIONS
TWIN CITIES MEMORIAL BRIDGE REPLACEMENT PROJECT

Levee District No. 1 of Sutter County (LD1) has the following conditions to be included on the Central Valley Flood Protection Board Encroachment Permit for the Twin Cities Memorial (5th Street) Bridge Replacement Project. The conditions are as follows:

1. All improvements shall meet or exceed Central Valley Flood Protection Board Title 23, Department of Water Resources, DWR Urban Levee Design Criteria, FEMA, **Levee District No. 1 of Sutter County**, and U.S Army Corps of Engineers Standards and requirements.

2. All work endorsed by this permit shall be in accordance with the submitted plans titled "Project Plans for Construction of Improvement in Sutter and Yuba Counties for 5th Street Bridge Replacement Project" dated MAY 2ND, 2016, except as modified by special permit conditions herein. No further work, other than approved by this permit, shall be done in the area without prior endorsement of **Levee District No. 1 of Sutter County**. (*The plans submitted are 65% Progress Print – Not for Construction. An endorsement signature block shall be placed on the "For Construction" improvement plans.* ***Levee District No. 1 of Sutter County*** *shall review and provide final endorsement at time "For Construction" plans are submitted.*)

3. The project shall not increase the 1-in-100 and/or the 1-in-200 design water surface elevation of the Feather River West Levee Project along the west bank of the Feather River as documented in the Technical Memorandum titled "Design Water Surface Profiles for the Feather River West Levee Project Addendum #2" dated December 27, 2013 for Sutter Butte Flood Control Agency (SBFCA) prepared by Peterson and Brustand, Inc. (PBI). Sutter Butte Flood Control Agency shall review and approve the hydraulic analysis.

4. The permittee shall be responsible for all liability associated with construction, operation, and maintenance of the permitted facilities and shall defend, indemnify, and hold the **Levee District No. 1 of Sutter County**, Central Valley Flood Protection Board, and the State of California; including its agencies, departments, boards, commissions, and their respective officers, agents, employees, successors and assigns (collectively, the "State"), safe and harmless, of and from all claims and damages arising from the project undertaken pursuant to this permit, all to the extent allowed by law. The State expressly reserves the right to supplement or take over its defense, in its sole discretion.

5. The permittee shall defend, indemnify, and hold the Central Valley Flood Protection Board, **Levee District No. 1 of Sutter County**, and the State of California, including its agencies, departments, boards, commissions, and their respective officers, agents, employees, successors and assigns (collectively, the "State"), safe and harmless, of and from all claims and damages related to the Central Valley Flood Protection Board's approval of this permit, including but not limited to claims filed pursuant to the California Environmental Quality Act. The State expressly reserves the right to supplement or take over its defense, in its sole discretion.

6. The Central Valley Flood Protection Board, Department of Water Resources, and **Levee District No. 1 of Sutter County** shall not be held liable for any damages to the permitted encroachment(s) resulting from flood fight, operation, maintenance, inspection, or emergency repair.

7. The landside levee access ramp north of the Bridge shall be fifteen (15) wide with eight (8) inches of Class 2 Aggregate Base over compacted subgrade. The slope shall be no less than five (5) percent and no greater than ten (10) percent. The access ramp shall meet the requirement of Title

23 Section 130. As an alternative to the replacement of the existing levee access ramp, a new southbound levee access ramp meeting the requirements stated shall be constructed at Teegarden Avenue. Pipe and rail fencing shall be provided along toe of levee from bridge to the access ramp and one hundred (100) feet north. The access ramp shall have a pipe gate located at the landside toe approved by **Levee District No. 1 of Sutter County**.

8. The minimum clearance for the levee patrol road (bike path) below the Bridge (subway) shall be no less than ten (10) feet with the road surface above the 100 year water surface elevation. In no case shall the structural section (aggregate base and asphalt concrete) of the roadway be located within the theoretical levee prism. The levee patrol road and access ramps to the subway shall be no less than sixteen (16) feet wide. The structural section of the roadway shall meet H20 loading. The roadway shall meet or exceed Title 23 Section 130 and 132 requirements.

9. The permittee may be required, at permittee's cost and expense, to remove, alter, relocate, or reconstruct all or any part of the permitted encroachment(s) if removal, alteration, relocation, or reconstruction is necessary as part of or in conjunction with any present or future flood control plan or project or if damaged by any cause. If the permittee does not comply, the Central Valley Flood Protection Board may remove the encroachment(s) at the permittee's expense.

10. The permitted encroachment(s) shall not interfere with operation and maintenance of the flood control project. If the permitted encroachment(s) are determined by any agency responsible for operation and maintenance of the flood control project to interfere, the permittee shall be required, at permittee's sole cost and expense, to modify or remove the permitted encroachment(s).

11. If the project or any portion thereof, is to be abandoned in the future, the permittee or successor shall abandon the project, at the permittee's or successor's sole cost and expense.

12. A set of As-Built Mylar plans and specifications shall be provided to **Levee District No. 1 of Sutter County** upon completion of the work.

13. A copy of the final Central Valley Flood Protection Board Permit shall be provided to **Levee District No. 1 of Sutter County** upon approval of the permit by the CVFPB Board.

14. **Levee District No. 1 of Sutter County** shall be notified five (5) working days prior to any construction activities.

MARYSVILLE LEVEE DISTRICT – ENDORSEMENT CONDITIONS
TWIN CITIES MEMORIAL BRIDGE REPLACEMENT PROJECT

Marysville Levee District has the following conditions to be included on the Central Valley Flood Protection Board Encroachment Permit for the Twin Cities Memorial (5th Street) Bridge Replacement Project. The conditions are as follows:

1. All improvements shall meet or exceed Central Valley Flood Protection Board Title 23, Department of Water Resources, DWR Urban Levee Design Criteria, FEMA, **Marysville Levee District**, and U.S Army Corps of Engineers Standards and requirements.

2. All work endorsed by this permit shall be in accordance with the submitted plans titled "Project Plans for Construction of Improvement in Sutter and Yuba Counties for 5th Street Bridge Replacement Project" dated MARCH 3RD, 20 16, except as modified by special permit conditions herein. No further work, other than approved by this permit, shall be done in the area without prior endorsement of **Marysville Levee District**. (*The plans submitted are 65% Progress Print – Not for Construction. An endorsement signature block shall be placed on the "For Construction" improvement plans.* ***Marysville Levee District*** *shall review and provide final endorsement at time "For Construction" plans are submitted.*)

3. The proposed project shall not increase, as determined by the U.S. Corps of Engineers and the California Central Valley Flood Protection Board, the 1-in-100 and/or 1-in-200 water surface elevation or the velocity along the east levee of the Feather River.

4. The permittee shall be responsible for all liability associated with construction, operation, and maintenance of the permitted facilities and shall defend, indemnify, and hold the **Marysville Levee District**, Central Valley Flood Protection Board, and the State of California; including its agencies, departments, boards, commissions, and their respective officers, agents, employees, successors and assigns (collectively, the "State"), safe and harmless, of and from all claims and damages arising from the project undertaken pursuant to this permit, all to the extent allowed by law. The State expressly reserves the right to supplement or take over its defense, in its sole discretion.

5. The permittee shall defend, indemnify, and hold the Central Valley Flood Protection Board, **Marysville Levee District**, and the State of California, including its agencies, departments, boards, commissions, and their respective officers, agents, employees, successors and assigns (collectively, the "State"), safe and harmless, of and from all claims and damages related to the Central Valley Flood Protection Board's approval of this permit, including but not limited to claims filed pursuant to the California Environmental Quality Act. The State expressly reserves the right to supplement or take over its defense, in its sole discretion.

6. The Central Valley Flood Protection Board, Department of Water Resources, and **Marysville Levee District** shall not be held liable for any damages to the permitted encroachment(s) resulting from flood fight, operation, maintenance, inspection, or emergency repair.

7. All rock slope protection disturbed during the construction of bridge and other facilities shall be replaced with rock slope protection in accordance with USACE, DWR, CVFPB, and Marysville Levee District requirements.

8. All fencing within the floodway shall be constructed in accordance with Title 23 Section 126.

ATTACHMENT G - Marysville Levee District Endorsement

9. Levee patrol road access shall be accommodated access across the bridge. This access needs only to be available during flood fight operations. This will require both a north and south access connection to the bridge.

10. The design shall be such that there is no requirement for a flood control structure (i.e. stop log structure). The roadway shall meet or exceed Title 23 Section 128 requirements.

11. The minimum clearance for the levee patrol road (bike path) waterside access ramp below the Bridge (subway) shall be no less than twelve (12) feet. In no case shall the structural section (aggregate base and asphalt concrete) of the roadway be located within the theoretical levee prism. The access ramps shall be no less than sixteen (16) feet wide. The structural section of the roadway shall meet H20 loading. The roadway shall meet or exceed Title 23 Section 130 and 132 requirements.

12. The permittee may be required, at permittee's cost and expense, to remove, alter, relocate, or reconstruct all or any part of the permitted encroachment(s) if removal, alteration, relocation, or reconstruction is necessary as part of or in conjunction with any present or future flood control plan or project or if damaged by any cause. If the permittee does not comply, the Central Valley Flood Protection Board may remove the encroachment(s) at the permittee's expense.

13. The permitted encroachment(s) shall not interfere with operation and maintenance of the flood control project. If the permitted encroachment(s) are determined by any agency responsible for operation and maintenance of the flood control project to interfere, the permittee shall be required, at permittee's sole cost and expense, to modify or remove the permitted encroachment(s).

14. If the project or any portion thereof, is to be abandoned in the future, the permittee or successor shall abandon the project, at the permittee's or successor's sole cost and expense.

15. A set of As-Built Mylar plans and specifications shall be provided to **Marysville Levee District** upon completion of the work.

16. A copy of the final Central Valley Flood Protection Board Permit shall be provided to **Marysville Levee District** upon approval of the permit by the CVFPB Board.

17. **Marysville Levee District** shall be notified five (5) working days prior to any construction activities.